Servicehandbuch Service Manual 849.5003.24 -02-	SPECTRUM ANALYZER 100 Hz...5.0 GHz	FSB 848.0020.52	3

MP MASTER
MA20605

6CS

Servicehandbuch
Service Manual
849.5003.24 -02-

SPECTRUM ANALYZER
100 Hz...5.0 GHz

FSB
848.0020.52

3

[INSTRUMENT SHOP]

ROHDE&SCHWARZ
Measuring Instruments
and Systems Division

MICROFICHED

Service Manual

SPECTRUM ANALYZER

FSB

848.0020.52

VOLUME 1

Service manual consists of 3 volumes

Printed in the Federal
Republic of Germany

Index :

Contents of FSB Manual

Operating Manual

1 Specifications

2 Operation

Service Manual

Volume 1

3 Performance Test

4 Service Instructions for Complete Instrument

Volume 2

5 Service Instructions RF Unit

6 Service Instructions for Modules of RF Unit

	Order No.	Index
Attenuator	849.3517.00	1
RF Module	848.9511.02	2
Preamplifier 3rd IF	848.8009.02	3
YIG Synchronization	849.2010.02	4
YIG Pretune + YIG Oscillator	848.6506.02	5
2nd LO/3rd Converter	848.3507.02	6
M Synthesizer	807.0010.02	7

Volume 3

6 Service Instructions for Modules of RF Unit

N Synthesizer	849.1014.02	1
Summing Loop	807.4015.02	2
Sweep Synthesizer	807.5011.02	3
Reference 2	807.3019.02	4
Reference 1	848.5000.02	5
Frequency Processor	810.3400.02	6
Interface	807.7014.02	7
Keyboard	806.4811.02	8
Power Supply, A21	808.4819.02	9
Power Supply, A22	808.4519.02	10

Contents

		Page
4	**Service Instructions for Complete Instrument**	4.1
4.1	**Function Description**	4.1
4.1.1	Level and Bandwidth Switchover	4.1
4.1.2	Display Modes LIN and LOG	4.1
4.1.3	Frequency Accuracy and Phase Noise as Functions of Display Range and Resolution Bandwidth	4.3
4.2	**Mechanical Design**	4.13
4.3	**Adjusting the Complete Instrument**	4.14
4.3.1	Adjusting the Calibration Output Level	4.14
4.3.2	Adjusting the Internal Reference Oscillator	4.15
4.3.3	Adjusting the Reference Level	4.15
4.4	**Testing the Complete Instrument**	4.16
4.4.1	Testing the Power Supplies	4.16
4.4.2	Testing the Colour Monitor	4.16
4.4.3	Testing the Calibration Output Level	4.16
4.4.4	Testing the Internal Reference Frequency	4.16
4.4.5	Testing the Logarithmic Display	4.16
4.4.6	Testing the Linear Display and the Display LOG 1 dB	4.17
4.4.7	Testing the Frequency-independent Level Display	4.17
4.4.8	Testing the Resolution Bandwidths	4.19
4.4.9	Testing the Frequency-dependent Level Display	4.19
4.4.10	Testing the AC/DC Switchover	4.19
4.4.11	Testing the Frequency-independent Sensitivity	4.19
4.4.12	Testing the Frequency-dependent Sensitivity	4.20
4.4.13	Testing the Spurious	4.20
4.4.14	Testing the Spectral Purity	4.20
4.4.15	Testing the Spurious FM	4.22
4.4.16	Testing the Centre Frequency Accuracy	4.23
4.4.17	Testing the Span Accuracy	4.23
4.4.18	Testing the Sweep Time	4.24
4.4.19	Testing Nonlinearities	4.25
4.4.20	Testing the 1-dB Compression	4.26
4.4.21	Testing Nonharmonics	4.26
4.4.22	Testing the Reflection Coefficient (VSWR)	4.27
4.4.23	Testing the Demodulation	4.27
4.4.24	Testing the Reference Input/Output	4.28
4.4.25	Testing the Internal Frequency Counter	4.28
4.4.26	Testing all Outputs and Inputs	4.28
4.5	**Required Measuring Instruments and Accessories**	4.29
4.6	**Troubleshooting on Complete Instrument**	4.31
4.6.1	Switch-on Procedure	4.32
4.6.1.1	List of Service Routines	4.34
4.6.2	Frequency Error	4.35
4.6.3	Amplitude Error	4.35

3 Performance Test

This section presents short tests for checking the main rated specifications. Approximately 90 % of the guaranteed values are checked.

If a 100 % test is required, proceed as in Section 4.4 (Testing of Complete Instrument).

It is recommended to perform the described tests once a year (the internal crystal oscillator is subject to natural aging) in order to comply with the guaranteed specifications for the frequency accuracy. Further checks described in Section 3.4 are also advisable.

The measured values obtained from the annual tests can be entered in a copy of the Performance Test Report (Section 3.3) which enables a complete overview of the required specifications.

3.1 Required Measuring Equipment and Accessories

Item	○ Designation, required specifications ● Recommended R&S equipment	Type	Order No.	Use described in section:
1	○ Frequency counter Frequency 10 MHz Inherent error $< 1 \times 10^{-8}$ Input impedance 50 Ω Max. input voltage 5 V Ext. reference input 5/10 MHz			3.2.1.1
2	○ Frequency standard Frequency 5 MHz Inherent error $< 1 \times 10^{-9}$ Output impedance 50 Ω Output voltage >0.1 V			3.2.1.1 3.2.1.3 3.2.2.1 3.2.2.2
	● Rubidium frequency standard	XSRM	238.4011.02	
	● Caesium frequency standard	XSC	299.4011.02	
3	○ RF generators Frequency range 100 MHz to 18 GHz Output impedance 50 Ω Output level –40 to + 30 dBm (generator and power amplifier if required)			3.2.1.2 3.2.1.3 3.2.2.1 3.2.2.2 3.2.2.3 3.2.2.7 3.2.2.9 3.2.3.2.3 3.2.3.2.4 3.2.3.2.5 3.2.3.2.6
	● Sweep generator	SWM	814.7016.05	
	● Synthesized signal generator	SMGU	819.0010.52	

Item	○ Designation, required specifications ● Recommended R&S equipment	Type	Order No.	Use described in section:
4	○ RF power meter with precision power sensor Frequency range 10 MHz to 5 GHz Power range –30 dBm to 0 dBm Accuracy <0.1 dB ● RF power meter with precision power sensor	 NRV NRV-Z2 URV5-Z4	 828.2511.02 828.3218.02 395.1619.55	3.2.2.1 3.2.2.2 3.2.2.3 3.2.2.7 3.2.2.9
5	○ Power divider 2 x 50 Ω Transmission loss <7 dB Level difference at outputs <0.1 dB			3.2.2.1 3.2.2.2 3.2.2.3 3.2.2.5 3.2.2.6 3.2.2.8
6	○ Precision calibration set Attenuation range 0 to 100 dB Attenuation steps 0.1 dB Maximum power 1 W ● Precision attenuator set f <2.7 GHz	 RSP	 831.3515.02	3.2.2.5 3.2.2.6 3.2.2.7 3.2.2.8 3.2.2.9
7	○ VSWR bridge Impedance 50 Ω Frequency range 10 MHz to 5 GHz Directivity >40 dB			3.2.2.9
8	○ Termination 50 Ω Connector: N male Reflection coefficient <10 % Frequency range 0 to 5 GHz			3.2.2.10 3.2.2.11 3.2.3.1.1 3.2.3.1.2 3.2.3.1.3
9	○ Various lowpass/bandpass filters Attenuation for f>2 x fg: >70 dB Impedance 50 Ω			3.2.3.2.3 3.2.3.2.4 3.2.3.2.5
10	○ Power adder Frequency range 10 MHz to 5 GHz Impedance 50 Ω Decoupling >25 dB			3.2.3.2.4
11	○ Microwave analyzer Frequency range 5 to 11 GHz Impedance 50 Ω Sensitivity <–110 dBm			3.2.3.2.7

3.2 Checking the Rated Specifications

Checking the rated specifications provides information on the condition of the instrument and covers approx. 90 % of the guaranteed values. These tests can be specifically supplemented according to requirements.

Proceed according to Section 4.4 (Testing Complete Instrument) if a 100 % test is required.

The rated specifications can only be correctly checked if the following tests are carried out and the results prove to be satisfactory.

Power supply: four green LEDs and one yellow LED at the rear of the instrument light up.

Switch-on test: no error message.

Test : checking of all LEDs, keys, supply voltages, calibration values without errors.

Set the instrument to internal reference (see Operating Manual, section SET UP). If deviations from normal operation are not expected, the following setting applies:

RF attenuation: ≥ 10 dB
Resolution bandwidth, video bandwidth, sweep time in "Coupled mode" matched to type of signal.

3.2.1 Frequency Accuracy

3.2.1.1 Internal Reference Frequency

The accuracy of the internal reference frequency largely depends on the temperature inside the instrument and the operating time of the oscillator. A reference value for the frequency error is 1×10^{-7}, although the oscillator can be set to $< 1 \times 10^{-8}$.

Essential for measurement:

The instrument must be operated for at least one hour at an ambient temperature of 25 ± 5 °C. (The aging of the internal reference can only be determined after a period of at least 30 days.) The instrument operates with its own (internal) reference source.

Required measuring equipment:

Frequency counter
Resolution 10^{-8}
Frequency 10 MHz
Frequency error $< 1 \times 10^{-8}$

An external frequency standard (rubidium or caesium) may have to be used for the counter.

Test setup for 3.2.1.1:

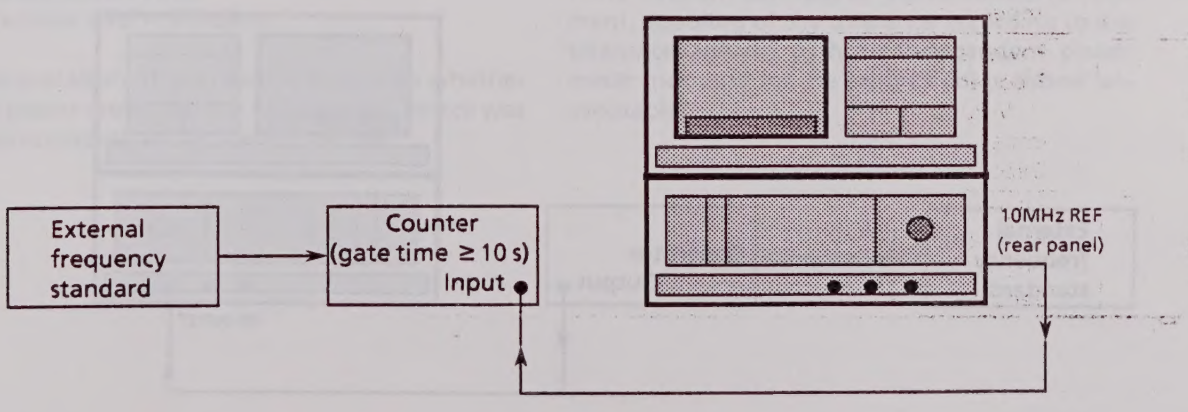

3.2.1.2 Frequency Accuracy According to Data Sheet

The frequency accuracy of the instrument depends on

- the internal reference frequency (Section 3.2.1.1)
- the span setting (>5 MHz, ≤5 MHz)
- the centre frequency accuracy of the IF filter.

Since the instrument carries out measurements in the calibrated state, deviations of the IF filter centre frequency are compensated for as a result of calibration. The residual error is much smaller than the span and can therefore be ignored.

Required measuring equipment:

Generator (synthesizer)
Frequency error $< 10^{-8}$
Frequency range 100 Hz to 5 GHz

An external frequency standard (rubidium or caesium) may have to be used for the generator.

Span setting 5200 MHz (full span, coupled mode):

At each frequency, the deviation must be less than

$\Delta = 8 \times 10^{-3} \times \text{span}$

The expression applies to all spans larger than 5 MHz. If it is not satisfied, proceed as in Section 4.4.16.

Span setting ≤5 MHz (coupled mode):

At each frequency, the deviation must be less than

$\Delta = 2.5 \times 10^{-3} \times \text{span} \pm \text{RBW} \pm f_c \times \text{R. A.}$

The expression applies to all spans between 100 Hz and 5 MHz. If it is not satisfied, proceed as in Section 4.4.16.

(RBW = Resolution bandwidth
f_c = Centre frequency
R. A. = Reference frequency error)

Test setup for 3.2.1.2:

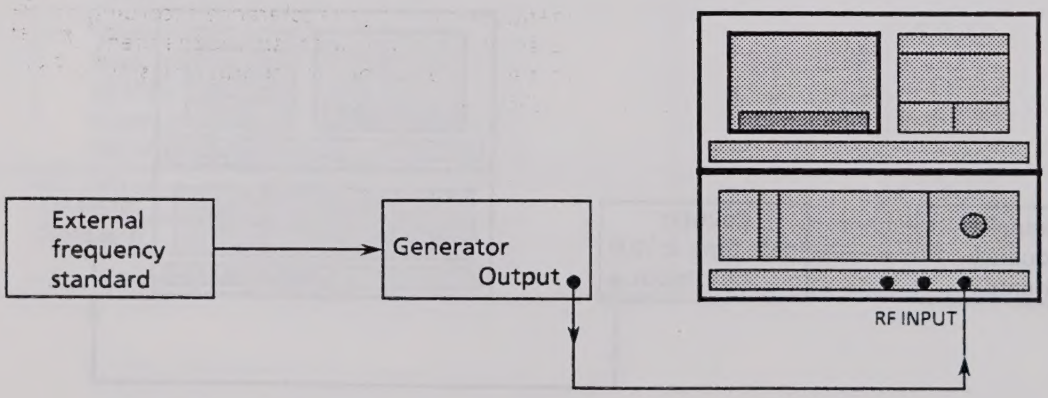

3.2.1.3 Span Accuracy

The span accuracy is independent of the absolute frequency and 5×10^{-3} in coupled mode. The stop and start frequencies are determined using an external generator in monochrome mode (graticule colour = trace colour = marker colour) and the difference generated between these two values (= span).

3.2.1.4 External Reference

Set the instrument to the external reference in the SETUP menu. Deviations in the external reference of 1×10^{-6} (corresponding to ± 10 Hz) must not lead to error messages. Check the level range according to the data sheet.

3.2.2 Amplitude Accuracy

3.2.2.1 Calibration Output 100 MHz

The level accuracy (= amplitude accuracy) of the instrument depends directly on the level accuracy of the calibration signal. Since the internal calibration source is also used in a direct method (see in the following), its amplitude accuracy must be checked twice (direct and indirect methods).

The power meter largely determines the accuracy in both cases (see test setup) and must therefore be calibrated exactly (correction curve).

Analyzer setting:

Linear display
RF attenuation 10 dB
Reference level –19.0 dBm.

Interpretation of the result depends on whether the power meter used to calibrate the device was used according to Section 4.3.1 or not.

Tolerance analysis: (see standard IEC 714, Expression of the properties of spectrum analyzers):

- Power meter used for calibration:

  tolerance = permissible tolerance according to data sheet minus tolerance of measuring instrument

- Power meter ***not*** used for calibration:

  tolerance = permissible tolerance according to data sheet plus tolerance of measuring instrument

Direct method:

The sensor is connected to CAL OUTPUT.

Indirect method:

The analyzer is tuned to 100 MHz and calibrated briefly. The generator applies the same power to the sensor and the analyzer input via the power divider.

(Note: Harmonics suppression of generator >40 dB)

The tolerances of the power divider must be incorporated in the tolerance analysis.

Vary the generator level until the analyzer indicates –20 ± 0.5 dBm.

The difference between the analyzer display and the power meter display is the inherent error of the internal calibration.

As a result of the calibration procedure and the finite inherent accuracy of the calibration equipment, doubling of the tolerance according to the tolerance analysis with an independent power meter (not used for the calibration) is almost unavoidable.

Test setup for 3.2.2.1:

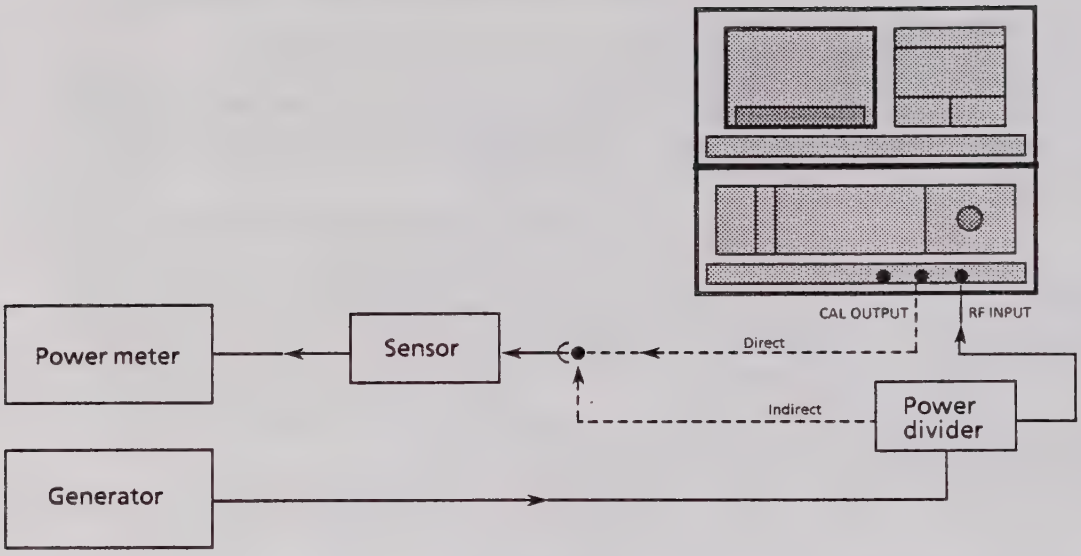

3.2.2.2 RF Frequency Response with Fixed (10 dB) RF Attenuation

The procedure is the same as in Section 3.2.2.1 (indirect method) except that the frequency of the analyzer and generator is varied between 100 Hz and 5 GHz. The correction coefficients (especially of the power sensor and the power divider) must also be taken into account.

As far as the tolerance is concerned, points discussed in Section 3.2.2.1 apply. The frequency response in the complete frequency range may be 1.0 dB (reference frequency 100 MHz). If the measuring equipment recommended in Section 3.1 is used for the calibration, a tolerance of only ± 0.78 dB is permissible (with tolerance NRV).

Otherwise, the permissible tolerance is increased to ± 1.22 dB.

The maximum error must not exceed the following values:

f < 2 GHz	
Error per 5-dB step	< ± 0.2dB
Total error	< ± (0.3 + 1.3 % of attenuation value) dB
Max.	1 dB

f > 2 GHz	
Error per 5-dB step	< ± 0.5dB
Total error	< ± (0.5 + 2.5 % of attenuation value) dB
Max.	2 dB

3.2.2.3 RF Frequency Response with RF Attenuation >10 dB

The prodecure is the same as in Section 3.2.2, the reference values according to Section 3.2.2.2.

Increase the RF level of the generator in 10-dB steps. The maximum power of the divider or the RF attenuation switch (1 W ≙ +30 dBm) must not be exceeded.

3.2.2.4 Level Display Linearity in Logarithmic Level Ranges

The procedure is the same as in Section 3.2.2.1 except that a precision calibration set with exactly known characteristics is connected between the power divider and RF INPUT. The displayed values are checked at a centre frequency of 100 MHz.

If the generator cannot be set to the reference value with a deviation <0.01 dB, the actual deviation must be taken into account in the evaluation. Ensure that the S/N ratio is appropriate by selecting the resolution bandwidth.

Maximum permissible level error with a resolution bandwidth of >30 Hz:

Meas. value display	Measurement range (f < 2 GHz)					
	1 dB	10 dB	20 dB	50 dB	100 dB	110 dB
0 dB : : −50 dB	Reference level error: ±0.1dB ±0.2dB ±0.3dB ±0.5dB Max. linearity deviation: ±0.1 dB/dB ±0.2 dB/dB					
: : : −100 dB	Reference level error: ±1.5dB Max. linearity deviation: ±0.2 dB/dB (from −20 dB)					
: : −105 dB	Reference level error: ±3 dB (S/N ratio)					

For frequencies f > 2 GHz, the error value is increased because of the attenuator as specified in Section 3.2.2.3.

3.2.2.5 Level Display Linearity in Linear Level Range

The setting is the same as in Section 3.2.2.4.

The maximum permissible level error:
ΔP = 5 % of the reference level + deviation of the actual level from the reference level.

3.2.2.6 IF Level Linearity as a Function of Input Mixer Level

With a constant attenuation of the RF attenuator of 10 dB, apply a level between −20 and +10 dBm to the instrument input.

The power meter display must not deviate by more than 1 dB from the ideal value with a mixer level from −30 to 0 dBm (corresponding to a generator level of −20 to +10 dBm less 10 dB RF attenuation).

Test setup for 3.2.2.6:

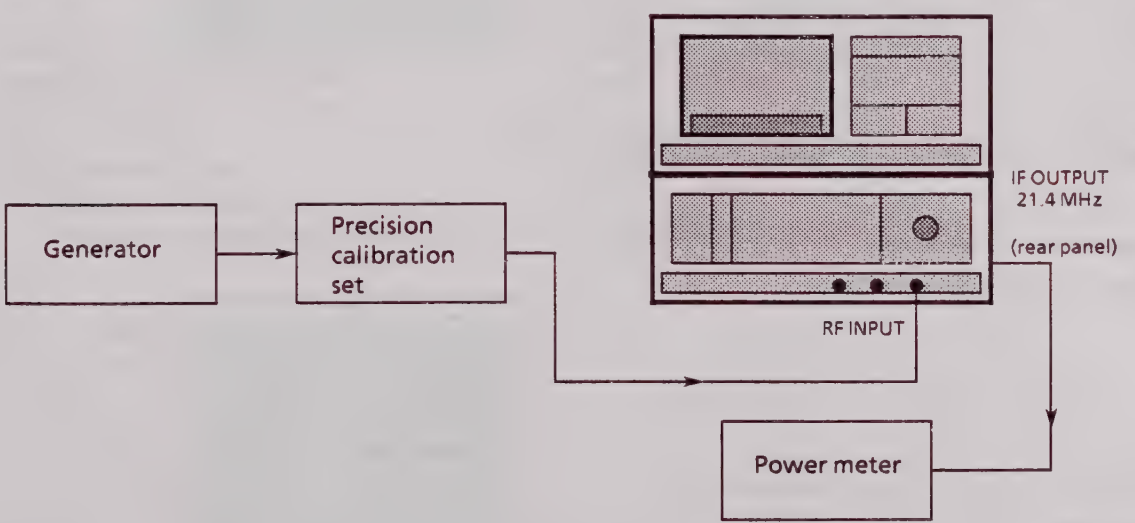

3.2.2.7 Level Display Accuracy in Logarithmic Level Ranges at RF Attenuation >10 dB

The maximum permissible level error following a brief calibration:

ΔP = ± calibration level accuracy ± frequency response ± [(RF attenuation −10 dB)/5] × $F_{att.}$ ± level display error in the logarithmic level range

Example: a level of 35 dB at full deflection is measured using an RF attenuation of 30 dB in the 50-dB range.

ΔP = ± 0.2 dB ± 0.6 dB ± 0.8 dB ± 0.5 dB
= ± 2.1 dB

$F_{att.}$ = Error of attenuator per 5-dB step (cf. Section 3.2.2.3)

3.2.2.8 Return Loss of Input

The return loss of the RF input is determined with and without a 10-dB RF attenuation.

Test procedure:

The maximum level at the RF input must be + 20 dBm with an RF attenuation of 0 dB or + 30 dBm with an RF attenuation of 10 dB.

Remove the connection between the VSWR bridge and the analyzer. The value which appears on the power meter is the reference value. After reestablishing the connection, the return loss is the difference between the reference value and the currently displayed value.

0 dB RF attenuation: VSWR <3.0 ≙ >6 dB return loss (DC coupling)
10 dB RF attenuation: (f ≤ 2.7 GHz)
VSWR ≤ 1.5 ≙ >14 dB return loss (DC coupling)
10 dB RF attenuation: (f > 2.7 GHz)
VSWR ≤ 1.8 ≙ >10 dB return loss (DC coupling)

Test setup for 3.2.2.7:

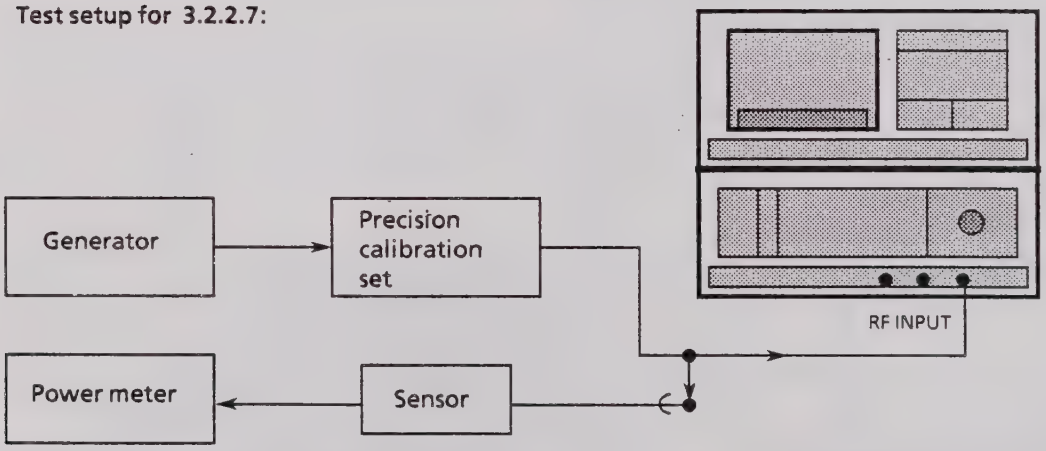

Test setup for 3.2.2.8:

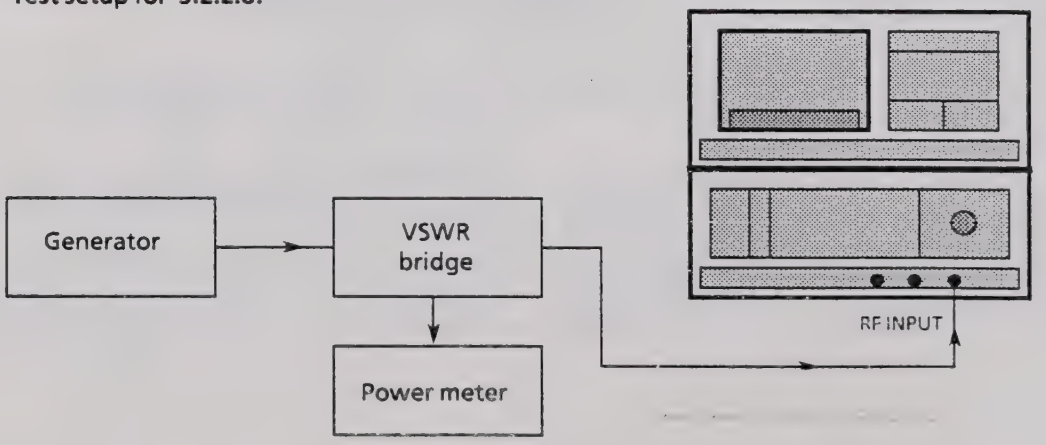

3.2.2.9 Thermal Noise

The maximum sensitivity of the analyzer is defined by the thermal noise of the instrument and the smallest 3-dB resolution bandwidth.

Test procedure:

Connect 50 Ω to analyzer input and enter the following setting values:

RF attenuation	0 dB
Span	0 Hz
RBW	6 Hz
VBW	1 Hz

(The noise displays are approx. 13 dB higher when using the peak-value detector.)

3.2.2.10 Sensitivity at Bottom End of Frequency Range

As a result of the incomplete LO (local oscillator) suppression at low frequencies (see Section 3.2.3.1.1), a sensitivity loss occurs at the bottom end of the frequency range which is not caused by thermal noise. The oscillator noise is reproduced as well as the spurious signals in the oscillator sideband with the corresponding resolution bandwidth.

Test procedure:

Connect 50 Ω to analyzer input (ensure no RF leakage).
RF attenuation 0 dB
Span 0 Hz
IF bandwidth 6 Hz
Video bandwidth 1 Hz
(excluding sinusoidal spurious)

Centre frequency	Max. noise displayed
200 Hz < f < 1 kHz	<–85 dBm
1 kHz < f < 10 kHz	<–105 dBm
10 kHz < f < 100 kHz	<–110 dBm
100 kHz < f < 1 MHz	<–115 dBm
1 MHz < f < 20 MHz	<–130 dBm
20 MHz < f < 4800 MHz	<–140 dBm
4.8 GHz < f < 5.0 GHz	<–137 dBm

3.2.2.11 Resolution Filters

The selection properties of the internal selection filters are to be determined. Of interest are the 3/6 and 60-dB bandwidths as well as the amplitude and frequency offsets following a total calibration.

Test procedure:

The spectrally pure signal of the internal 10-MHz reference (rear panel) is applied to the RF input. The selection filters are reproduced using this signal (N dB down):

Resolution bandwidth 10 Hz to 3 MHz
Span = 20 x bandwidth
Video bandwidth = 0.1 x resolution bandwidth

3.2.3 Spurious Signals

3.2.3.1 Spurious Signals with Terminated Input

3.2.3.1.1 Local Oscillator Suppression at 0 Hz

At a receive frequency of 0 Hz, the oscillator frequency corresponds to the intermediate frequency. Therefore, the oscillator is reproduced with the selection characteristic of the selected resolution filter.

Level of 1st oscillator in normal mode:
<–15 dBm at 0-dB RF attenuation.

3.2.3.1.2 Further Internal Oscillators

As a result of the finite crosstalk attenuation of the instrument, crosstalk arising from internal oscillators and their harmonics can lead to the display of spurious which mainly occurs at the bottom end of the range.

Frequency	Possible noise source
50/60/400 Hz approx. 50 Hz	Power supply Frame frequency
approx. 30 kHz 100 kHz approx. 116 kHz	Line frequency Reference frequency A/D converter
40 MHz 80 MHz n • 40 MHz	Drive frequency of video amplifier (dot clock)
10 MHz 20 MHz 100 MHz n • 100 MHz	Multiples of reference frequency

Test procedure:

Connect 50 Ω to the analyzer input and switch the RF attenuation to 0 dB.

At a resolution bandwidth of 10 kHz to 30 kHz set the corresponding frequencies, select the frequency step size equal to the frequency and thus also measure the harmonics.

Maximum level of spurious signals: <–110 dBm.

3.2.3.1.3 Spurious Signals as Result of Mixing Procedures

Spurious of this type occur when mixing N× f_{OSC1} with M× f_{OSC2} results in an intermediate frequency or image frequency of a conversion.

Test procedure:

Connect 50 Ω to the analyzer input. RF attenuation 0 dB, max. frequency span, resolution bandwidth 30 kHz.

Nominal inherent noise: <-110 dBm.

Frequencies of known spurious signals:

Frequency [MHz]
0.922
22.93
489.82
1133.95
1438.13
1585.73
4757.20

Max. display level in normal mode: <-110 dBm.

3.2.3.2 Spurious Signals with One or More Input Signals

3.2.3.2.1 Spectral Purity of Internal Oscillators

In addition to the unavoidable phase noise, the sidebands of the internal oscillators contain discrete frequencies as a result of crosstalk (see Section 3.2.3.1.2).

Test procedure:

Connect the spectrally pure signal of the internal 10-MHz reference (rear panel) to the RF input. Spurious signals and phase noise can thus be determined at spacings up to ± 1 MHz. Spurious signals of higher frequency do not occur in the sideband with corresponding levels. The phase noise is determined using the noise marker.

Fixed spurious signals

50/60/400 Hz	–70 dBc
m * 29.411 kHz	–80 dBc
100 kHz	–90 dBc

Phase noise (dBc/1 Hz) *

>100 Hz offset	≤–95
>1 kHz offset	≤-105
>10 kHz offset	≤–110
>30 kHz offset	≤–113
>100 kHz offset	≤–115
>300 kHz offset	≤–115

* Span = <5 MHz
Resolution bandwidth = <3 kHz
Video bandwidth = <0.1 x resolution bandwidth

3.2.3.2.2 Variable-frequency Spurious Signals in Oscillator Sidebands

Crosstalk of the frequency processing generates spurious signals in the sideband of the mixer oscillators whose frequency offset is variable and not fixed. The characteristic of these spurious signals is that they only appear when an input signal is applied.

Maximum level: –75 dBc (referred to reference level).

Test setup: as in Section 3.2.1.2 (ensure spectral purity of generator).

3.2.3.2.3 Spurious FM

The spurious FM of the internal oscillators is determined according to Section 3.2.3.2.1.

Centre frequency 10 MHz
Span 100 Hz
Resolution bandwidth 10 Hz
Video bandwidth 1 Hz
Maximum spurious FM <1 Hz pp

The spurious FM is determined from the display of the filter curve. With a continuous curve, the spurious FM is ≪1 Hz pp.

3.2.3.2.4 Harmonics Resulting from Single Input Signal

Harmonics of frequency N x f occur in the case of a single input signal with frequency f as a result of the finite linearity of the input mixer.

The insufficient harmonics suppression of the generator must be appropriately improved using an additional lowpass or bandpass filter (approx. 70 dB are necessary).

Test procedure:

Apply a frequency f with a level of –30 dBm (corresponding to –40 dBm at input mixer), use this as the reference and measure at frequencies 2 x f to 5 x f.

Spurious	Range	Suppression
2f	40 MHz < f < 2500 MHz	> -80 dBc
3f	40 MHz < f < 1666 MHz	> -75 dBc
4f	40 MHz < f < 1250 MHz	> -75 dBc
5f	40 MHz < f < 1000 MHz	> -75 dBc

Test setup for 3.2.3.2.4:

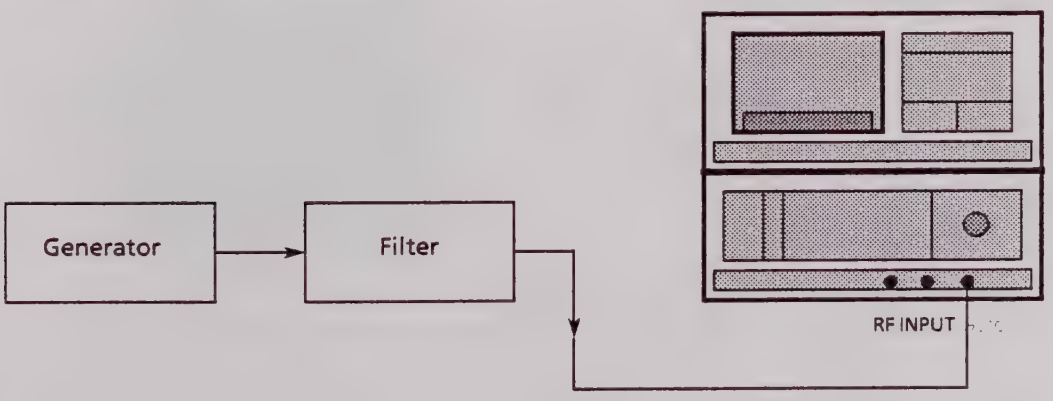

3.2.3.2.5 Spurious Resulting from Intermodulation of Two Input Signals

In the case of two input signals with f_1 and f_2 applied to the input mixer, combinations of these signals appear as a result of non-linearity:

2nd order differential signals: $f_1 + f_2$ and $f_2 - f_1$
3rd order differential signals: $2 \times f_2 - f_1$ and $2 \times f_1 - f_2$.

The insufficient harmonics suppression of the generators must be correspondingly improved by series-connected filters. The level spacing of each signal from its harmonics and intermodulation products must be >100 dB at the RF input.

Test procedure:

Apply frequencies f_1 and f_2 with a level of –20 dBm (corresponding to –30 dBm at the input mixer). This is to be used as the reference. Measure at the frequencies $2 \times f_2 - f_1$ and $2 \times f_1 - f_2$.

The following applies at a frequency >40 MHz and a signal spacing larger than 100 kHz:

Intermodulation products >75 dB (operating mode "Low Distortion").

Test setup for 3.2.3.2.5:

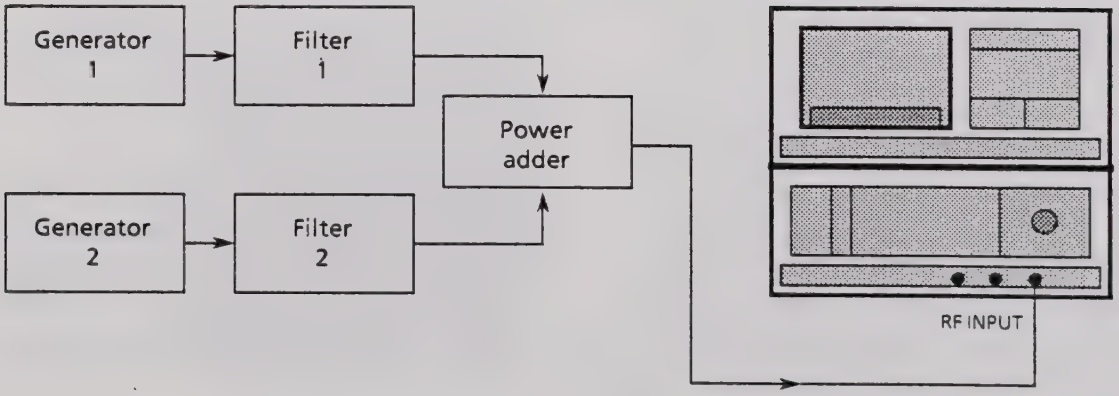

3.2.3.2.6 IF Rejection

An input signal whose frequency corresponds to one of the IF frequencies and whose level corresponds to the reference value should not have an influence greater than the thermal noise.

Test procedure:

Tune the generator to three possible IF frequencies in succession. The fundamental noise should not increase at an input level corresponding to the reference level. Problems resulting from broadband noise of the generator must be prevented by inserting a suitable bandpass filter. The resolution bandwidth of the filter is 10 Hz, the video bandwidth 1 Hz.

f_{noise}	Suppression	Noise increase
221.4 MHz	>100 dB	<3 dB
21.4 MHz	>100 dB	<3 dB
4.194 MHz	>100 dB	<3 dB

3.2.3.2.7 Image Frequency Rejection

Test procedure as in Section 3.2.3.2.4. The noise frequencies depend on the centre frequency in this case.

f_{noise}	Suppression	Noise increase
fe + 10842.8 MHz	>80 dB	<10 dB
fe + 442.8 MHz	>100 dB	<3 dB
fe + 42.8 MHz	>100 dB	<3 dB
fe + 8.388 MHz	>100 dB	<3 dB

Test setup for 3.2.3.2.6:

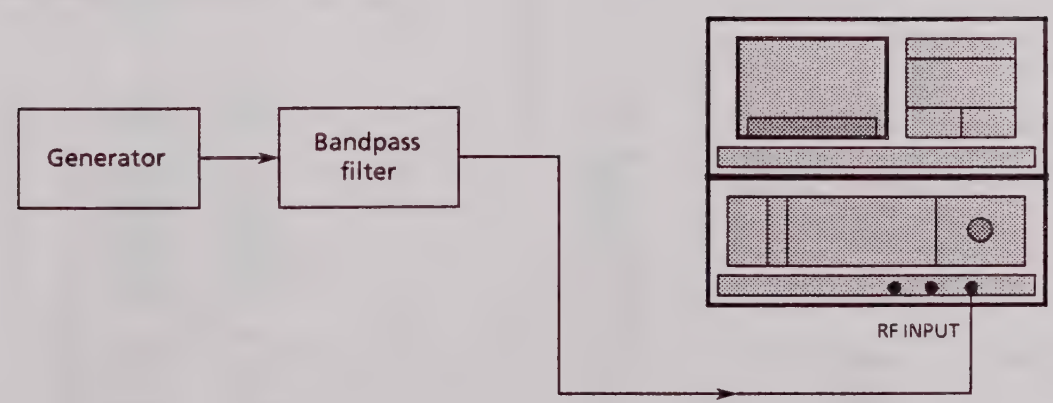

3.3 Performance Test Report

Rohde & Schwarz
SPECTRUM ANALYZER FSB
Order No. 848.0020.52
Serial No. .....

Date .....
Name .....

Item No.	Characteristic	Measure-ment as in Section	Min.	Actual	Max.	Unit
1	Internal reference	3.2.1.1	9.999999	_____	10.000001	MHz
2	Frequency accuracy Centre frequency Span	3.2.1.2				
	2500 MHz 5000 MHz		2484	_____	2516	MHz
	2500 MHz 900 MHz		2492.8	_____	2507.2	MHz
	2500 MHz 450 MHz		2496.4	_____	2503.6	MHz
	2500 MHz 200 MHz		2498.4	_____	2501.6	MHz
	2500 MHz 100 MHz		2499.2	_____	2500.8	MHz
	2500 MHz 50 MHz		2499.6	_____	2500.4	MHz
	2500 MHz 10 MHz		2499.92	_____	2500.08	MHz
	2500 MHz 5 MHz		2499.96	_____	2500.04	MHz
	2500 MHz <5 MHz		2499.9889	_____	2500.0111	MHz
3	Span accuracy	3.2.1.3				
	Span 5000 MHz		4975	_____	5025	MHz
	2000 MHz		1990	_____	2010	MHz
	200 MHz		199	_____	201	MHz
	20 MHz		19.9	_____	20.1	MHz
	5.01 MHz		4.985	_____	5.0351	MHz
	5.0 MHz		4.990	_____	5.010	Hz
	2000 Hz		1996	_____	2004	
4	External reference Level ≥ 0.1 V	3.2.1.4	>9.999990	_____	<10.000010	MHz
5	CAL out level 100 MHz	3.2.2.1	–20.1	_____	–19.9	dBm
6	RF frequency response 40 MHz to 5.0 GHz					
	RF attenuation: 10 dB	3.2.2.2	-21.0	_____	–19.0	dBm
	f ≤ 2.7 GHz 20 dB	3.2.2.3	–11.4	_____	–8.6	dBm
	30 dB		–1.8	_____	+ 1.8	dBm
	40 dB		+ 7.8	_____	+ 12.2	dBm
	50 dB		+ 17.4	_____	+ 22.6	dBm
	60 dB		+ 27.0	_____	+ 33.0	dBm
	f ≥ 2.7 GHz 20 dB		-12		-8	dBm
	30 dB		-12.25		-7.75	dBm
	40 dB		+ 7.5		+ 12.5	dBm
	50 dB		+ 17.25		+ 22.75	dBm

Item No.	Characteristic	Measure-ment as in Section	Min.	Actual	Max.	Unit
7	Log. level range	3.2.2.4				
	100 / 110 dB					
	–20 dBm			–20		dBm
	–21 dBm		–21.1	-----	–20.9	dBm
	–22 dBm		–22.2	-----	–21.8	dBm
	–23 dBm		–23.3	-----	–22.7	dBm
	–24 dBm		–24.4	-----	–23.6	dBm
	–25 dBm		–25.5	-----	–24.5	dBm
	–26 dBm		–26.6	-----	–25.4	dBm
	–27 dBm		–27.7	-----	–26.3	dBm
	–28 dBm		–28.8	-----	–27.2	dBm
	–29 dBm		–29.9	-----	–28.1	dBm
	–30 dBm		–31.0	-----	–29.0	dBm
	–32 dBm		–33.5	-----	–30.5	dBm
	–34 dBm		–35.5	-----	–32.5	dBm
	–36 dBm		–37.5	-----	–34.5	dBm
	–38 dBm		–39.5	-----	–36.5	dBm
	–40 dBm		–41.5	-----	–38.5	dBm
	–45 dBm		–46.5	-----	–43.5	dBm
	–50 dBm		–51.5	-----	–48.5	dBm
	–55 dBm		–56.5	-----	–53.5	dBm
	–60 dBm		–61.5	-----	–58.5	dBm
	–65 dBm		–66.5	-----	–63.5	dBm
	–70 dBm		–71.5	-----	–68.5	dBm
	–75 dBm		–76.5	-----	–73.5	dBm
	–80 dBm		–81.5	-----	–78.5	dBm
	–85 dBm		–86.5	-----	–83.5	dBm
	–90 dBm		–91.5	-----	–88.5	dBm
	–95 dBm		–96.5	-----	–93.5	dBm
	–100 dBm		–101.5	-----	–98.5	dBm
	–105 dBm		–106.5	-----	–103.5	dBm
	–110 dBm		–111.5	-----	–108.5	dBm
	–115 dBm		–116.5	-----	–113.5	dBm
	–120 dBm		–121.5	-----	–118.5	dBm
	–125 dBm		–130.0	-----	–120.0	dBm
	1 dB					
	–20 dBm			–20		dBm
	–20.1 dBm		–20.12	-----	–20.08	dBm
	–20.2 dBm		–20.24	-----	–20.16	dBm
	–20.3 dBm		–20.36	-----	–20.24	dBm
	–20.4 dBm		–20.48	-----	–20.32	dBm
	–20.5 dBm		–20.60	-----	–20.40	dBm
	–20.6 dBm		–20.72	-----	–20.48	dBm
	–20.7 dBm		–20.84	-----	–20.56	dBm
	–20.8 dBm		–20.96	-----	–20.64	dBm
	–20.9 dBm		–21.08	-----	–20.72	dBm
	–21.0 dBm		–21.20	-----	–20.80	dBm

Item No.	Characteristic	Measure-ment as in Section	Min.	Actual	Max.	Unit
8	Lin. level range	3.2.2.5				
	100 %		0	100	0	%
	80 %		75	-----	85	%
	60 %		55	-----	65	%
	40 %		35	-----	45	%
	20 %		15	-----	25	%
	5 %		0	-----	10	%
	Lin/log switchover					
	Without calibration		−1	-----	+ 1	dB
	With calibration		−0.2	-----	+ 0.2	dB
9	Linearity IF level	3.2.2.6				
	−30 dBm			0		dB
	−20 dBm level at		+ 9	-----	+ 11	dB
	−10 dBm 1st mixer		+ 19	-----	+ 21	dB
	0 dBm		+ 29	-----	+ 31	dB
10	Level accuracy with log. (various settings, corresponding tolerance)	3.2.2.7				
11	Input VSWR	3.2.2.8				
	RF attenuation 0 dB		—	-----	< 3.0	—
	RF attenuation ≥ 10 dB		—	-----	< 1.5 at f ≤ 2.7 GHz < 1.8 at f > 2.7 GHz	—
12	Thermal noise 2501 MHz RBW = 10 Hz VBW = 1 Hz Span = 100 Hz	3.2.2.9	—	-----	< −140	dBm
13	Sensitivity for 0 < f < 40 MHz	3.2.2.10				
	19.9 MHz		—	-----	< −130	dBm
	999 kHz		—	-----	< −115	dBm
	99.99 kHz		—	-----	< −110	dBm
	9.99 kHz		—	-----	< −105	dBm
	990 Hz		—	-----	< −85	dBm
	210 Hz		—	-----	< −85	dBm

Item No.	Characteristic	Measure-ment as in Section	Min.	Actual	Max.	Unit
14	Resolution filter (calibrated)	3.2.2.11				
	Resolution bandwidths (calibrated)					
	3 MHz		2.7	_____	3.3	MHz
	1 MHz		0.9	_____	1.1	MHz
	0.3 MHz		0.27	_____	0.33	MHz
	0.1 MHz		0.09	_____	0.11	MHz
	30 kHz		27	_____	33	kHz
	10 kHz		9	_____	11	kHz
	3 kHz		2.7	_____	3.3	kHz
	1 kHz		0.9	_____	1.1	kHz
	0.3 kHz		0.27	_____	0.33	kHz
	0.1 kHz		0.09	_____	0.11	kHz
	30 Hz		27	_____	33	Hz
	10 Hz		9	_____	11	Hz
	Frequency offset (calibrated)					
	3 MHz		–300	_____	+ 300	kHz
	1 MHz		–100	_____	+ 100	kHz
	0.3 MHz		–30	_____	+ 30	kHz
	0.1 MHz		–10	_____	+ 10	kHz
	30 kHz		–3	_____	+ 3	kHz
	10 kHz		–1	_____	+ 1	kHz
	3 kHz		–300	_____	+ 300	Hz
	1 kHz		–100	_____	+ 100	Hz
	0.3 kHz		–30	_____	+ 30	Hz
	0.1 kHz		–10	_____	+ 10	Hz
	30 Hz		–10	_____	+ 10	Hz
	10 Hz		–10	_____	+ 10	Hz
	Level (referred to 3 kHz) (calibrated)					
	3 MHz		–0.3	_____	+ 0.3	dB
	1 MHz		–0.3	_____	+ 0.3	dB
	0.3 MHz		–0.3	_____	+ 0.3	dB
	0.1 MHz		–0.3	_____	+ 0.3	dB
	30 kHz		–0.3	_____	+ 0.3	dB
	10 kHz		–0.3	_____	+ 0.3	dB
	3 kHz		0	_____	0	dB
	1 kHz		–0.3	_____	+ 0.3	dB
	0.3 kHz		–0.3	_____	+ 0.3	dB
	0.1 kHz		–0.3	_____	+ 0.3	dB
	30 Hz		–0.3	_____	+ 0.3	dB
	10 Hz		–0.3	_____	+ 0.3	dB

Item No.	Characteristic	Measure-ment as in Section	Min.	Actual	Max.	Unit
14	Resolution filter (calibrated)	3.2.2.11				
	Skirt selectivity					
	3 MHz		—	_____	<12:1	—
	1 MHz		—	_____	<12:1	—
	0.3 MHz		—	_____	<12:1	—
	0.1 MHz		—	_____	<12:1	—
	30 kHz		—	_____	<12:1	—
	10 kHz		—	_____	<12:1	—
	3 kHz		—	_____	<12:1	—
	1 kHz		—	_____	<12:1	—
	0.3 kHz		—	_____	<12:1	—
	0.1 kHz		—	_____	<12:1	—
	30 Hz		—	_____	<12:1	—
	10 Hz		—	_____	<12:1	—
15	Local oscillator suppression	3.2.3.1.1	—	_____	<–15	dBm
16	Fixed spurious signals	3.2.3.1.2	—	_____	<–110	dBm
17	Spurious signals caused by mixing	3.2.3.1.3	—	_____	<–110	dBm
18	Spectral purity	3.2.3.2.1				
	>100 Hz		—	_____	<–95	dBc/1Hz
	> 1 kHz		—	_____	<–105	dBc/1Hz
	> 10 kHz		—	_____	<–110	dBc/1Hz
	> 30 kHz		—	_____	<–113	dBc/1Hz
	> 100 kHz		—	_____	<–115	dBc/1Hz
	> 300 kHz		—	_____	<–115	dBc/1Hz
	Fixed spurious signals					
	n × 50/60/400 Hz		—	_____	<–70	dBc
	approx. 30 kHz		—	_____	<–80	dBc
	100 kHz		—	_____	<–90	dBc
	200 kHz		—	_____	<–90	dBc
19	Variable spurious signals YIG oscillator	3.2.3.2.2	—	_____	<–75	dBc
20	Spurious FM Span = 0 Hz	3.2.3.2.3	—	_____	<1	Hz

Item No.	Characteristic	Measure-ment as in Section	Min.	Actual	Max.	Unit
21	Harmonics	3.2.3.2.4	—	-----	<–80	dBc
22	3rd order intermodulation	3.2.3.2.5	—	-----	<–75	dBc
23	IF rejection	3.2.3.2.6				
	221.4 MHz		—	-----	>100	dB
	21.4 MHz		—	-----	>100	dB
	4.194 MHz		—	-----	>100	dB
24	Image frequency rejection	3.2.3.2.7				
	fe + 10842.8 MHz		—	-----	>80	dB
	fe + 442.8 MHz		—	-----	>100	dB
	fe + 42.8 MHz		—	-----	>100	dB
	fe + 8.388 MHz		—	-----	>100	dB

3.4 Maintenance

3.4.1 Cleaning

The external surfaces and the interior of the instrument should be cleaned depending on the frequency or length of use.

Interior:

The instrument (especially the display unit) should be cleaned every 6 months using compressed air or a vacuum cleaner to remove dust particles deposited as a result of electrostatic charges.

Front panel:

The front panel should be cleaned every 6 months using a soft cloth soaked in methylated spirits. Aggressive solvents such as trichloroethylene, turpentine or acetone must not be used.

Clean the CRT using a damp lint-free cloth. The surface of the tube is chemically etched and must never be treated using products which produce a polished effect.

3.4.2 Mechanical Maintenance

The two units (display unit, RF unit) each contain one blower in the rear panel and one in the power pack. The blowers are maintenance-free and do not have filters.

Apart from the blowers, the keyboard, the spinwheel and the input divider, the instrument contains no mechanical parts subject to wear. The instrument therefore requires no mechanical maintenance.

3.4.3 Electrical Maintenance

The electrical maintenance must be carried out once a year. The accuracy of the following two characteristics must be checked:

Frequency accuracy:

- 10-MHz reference (see Section 3.2.1.1)
- Control voltage range of all oscillators (see details in corresponding service manual)

  10-MHz crystal oscillator
  100-MHz crystal oscillator
  Sweep synthesizer
  M synthesizer
  N synthesizer
  Summing loop
  YIG pretune
  YIG synchronization
  2nd oscillator
  IF filter 2 (crystal oscillator)

Amplitude accuracy and sensitivity
(see details in Section 3.2.2)

3.4.4 Battery Replacement

The display unit contains a battery to power the CMOS RAMs, in which important instrument parameters are stored AC-power-proof. The battery has a very long service life (approx. 10 years). If the instrument is mostly used at ambient temperatures above 30 °C, the battery should be replaced approx. every 3 years as a precaution.

Replacing the battery: (see exploded view in Appendix of display unit service manual):

- Remove the top panel of the display unit.
- Unscrew the cover.
- Remove the main processor module.
- Replace the battery.

  Caution: the battery must only be replaced by one of the same type (Order No. 565.1687).

  The module should be powered via a diode and an external power pack when replacing the battery so that the stored calibration values are retained.

  The diode and the external supply can be removed after replacing the battery.

- Reassemble in the reverse order.
- Check the calibration.

3.4.5 Programming the EEPROM for Frequency Response Correction

Following replacement of one of the instrument modules listed in the following table, it is advisable to reprogram the EEPROM in module A34 (preamplifier 3rd IF). This is necessary in order to maintain the accuracy specified in section 3.3, item 6.

The same applies to repair work carried out on one of these modules and referring to components in the RF signal paths.

Module	Designation
Attenuator	A31
RF Module	A32/A33
YIG Pretune	A43
YIG Synchronization	A42

This job should usually be done by an R&S service shop.

If, however, the measuring equipment listed in the following table is available, proceed as described in the following.

Measuring and test equipment required	R&S order number
• Cable set (long)	811.0304.02
• Service Kit FS-Z1	811.0010.02
• BASIC program (floppy disk)	811.0185
• RF Generator SWM	814.7016.05
• RF Generator SMX	826.4517.52
• Relay Matrix PSU	290.8014.02
• Power Splitter 2 x 50 Ω 0 to 5 GHz	
• RF Voltmeter URV5	394.8010.02
• Precision power sensor NRV-Z2	828.3218.02
• Insertion Unit URV5-Z4	395.1619.55
• 50-Ω Termination RNB	272.4910.50
• Bandpass filter 21.4 MHz Bandwidth approx. 5 to 50 kHz with known insertion loss	811.0910.00 (contained in Service Kit FS-Z1)
• Process Controller PCA5	375.2010.04
• Printer PUD, if required	359.5501.02

a) Preliminary work on the analyzer

- Disconnect the connecting cable between X132 of the display unit and X132 of the RF unit.
- Mount filter 811.0910.00 (contained in Service Kit FS-Z1) to X132 of the RF unit.

The test setup is as shown on the next page.

Note:

When setting up the insertion unit at input B of the URV5, make sure that it is separated from the housing of the analyzer.

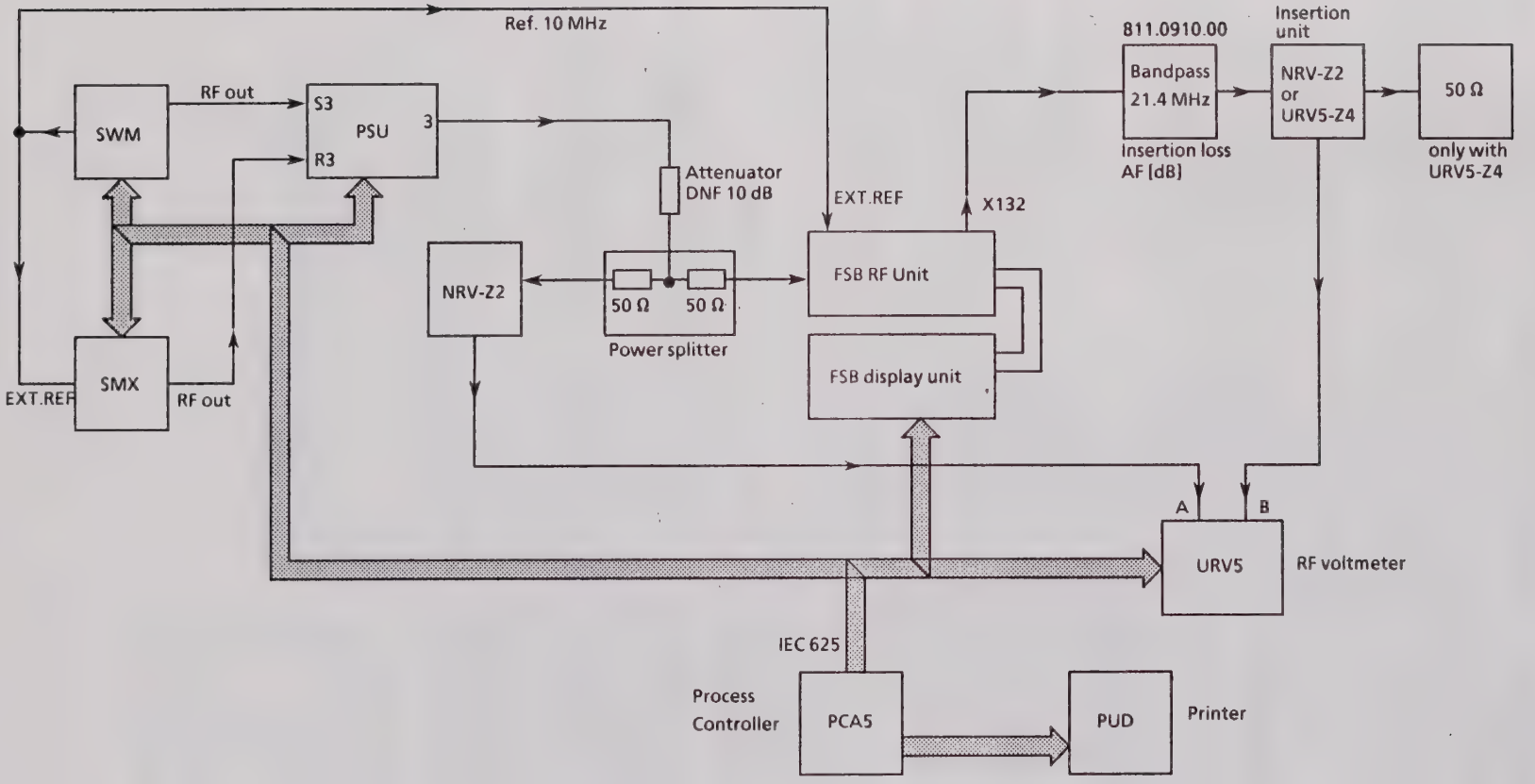

Test setup for programming the EEPROM on module A34

b) Programming procedure

- Insert floppy disk into Controller PCA5, load program in BASIC mode using LOAD "A:FSB6.BAS" and start.
  The user is guided through the program by means of menus.
- Enter attenuation of bandpass filter 21.4 MHz.

- The following operations can be performed:
  ① Measurement of uncorrected frequency response of FSB (duration approx. 20 min.)
  ③ Programming of EEPROM and measurement of corrected and uncorrected frequency response (duration approx. 60 min.)
  ⑤ Printout of frequencies and associated correction data.
  ⑥ Printout of graphics for corrected and uncorrected frequency response as well as for correction data.
  ⑨ End of program.

  Note:
  It is recommended to measure the uncorrected frequency response prior to programming in order to make sure that it lies within the correctable range.
- Start programming.
- After completion of programming, both the uncorrected and the corrected frequency response can be output on the printer.

c) Reassembling

- Unscrew bandpass filter from X132.
- Reassemble connecting cable.

3.5 Storage

It is recommendable to remove the internal battery (see Section 3.4.4) if the instrument is to be stored for a longer period at extremely high or low temperatures. The storage temperature range is –40 °C to + 70 °C. In the case of a high temperature and a high humidity, it is recommendable to seal the dry instrument in plastic foil with a dessicator bag, or at least to cover it with wax paper as airproof as possible.

After storing for a longer period at high humidity, proceed as follows:

- Switch on the instrument and allow to dry for a period of 2 to 6 hours at + 40 °C to + 55 °C.

- Install the battery as in Section 3.4.4.

- Check the rated specifications as in Section 3.2.

4 Service Instructions for Complete Instrument

4.1 Function Description

The function of the RF unit and the display unit is described in Section 5.1 of the corresponding service manual.

4.1.1 Level and Bandwidth Switchover

Understanding of the function of both units depending on the input level and operating mode is facilitated by using the functional diagrams (see Appendix in Section 5 of corresponding service manual), the level diagrams (Figs. 4-3 to 4-10) for operating modes NORMAL, LOW NOISE, LOW DISTORTION and the display modes LIN and LOG, as well as Table 4-1 with the bandwidth settings for the respective modes.

Operating mode NORMAL
(See level diagram (Figs. 4-3 and 4-4)):

In mode NORMAL, the analyzer operates at the 1st mixer with a level of -30 dBm generating full-scale value. This corresponds to a reference level of -20 dBm with 10-dB RF attenuation.

With resolution bandwidths <1 kHz, the set bandwidth of the module "IF filter 1" (A31) is >10RBW (see Table 4-1).

Operating mode LOW NOISE
(See level diagram (Figs. 4-5 and 4-6)):

In mode LOW NOISE, the analyzer operates at the 1st mixer with a level of -20 dBm generating full-scale value. This corresponds to a reference level of -10 dBm with 10-dB RF attenuation.

The resolution bandwidths are controlled in an analog manner to operating mode NORMAL (see Table 4-1).

Operating mode LOW DISTORTION
(See level diagram (Figs. 4-7 and 4-8)):

In mode LOW DISTORTION, the analyzer operates at the 1st mixer with a level of -40 dBm generating full-scale value, in order to keep 2nd and 3rd order non-linearities as small as possible. This corresponds to a reference level of -30 dBm with 10-dB RF attenuation.

With resolution bandwidths <1 kHz, the set bandwidth of the module "IF filter 1" (A31) is ≈ 10 kHz for intermodulation reasons (see Table 4-1).

4.1.2 Display Modes LIN and LOG

Display modes LOG 110 dB to LOG 10 dB
(See level diagram (Fig. 4-9)):

The normal operating mode with a logarithmic display is LOG 100 dB. The display range LOG 110 dB is derived from this range by means of positive offset and voltage division. The other logarithmic ranges only utilize the corresponding upper part of the logarithmic amplifier characteristic.

The control of the noise bandwidth of the logarithmic amplifier as a function of the resolution bandwidth ensures that the S/N ratio is determined by the signal level and not by the broadband inherent noise of the chain of amplifiers.

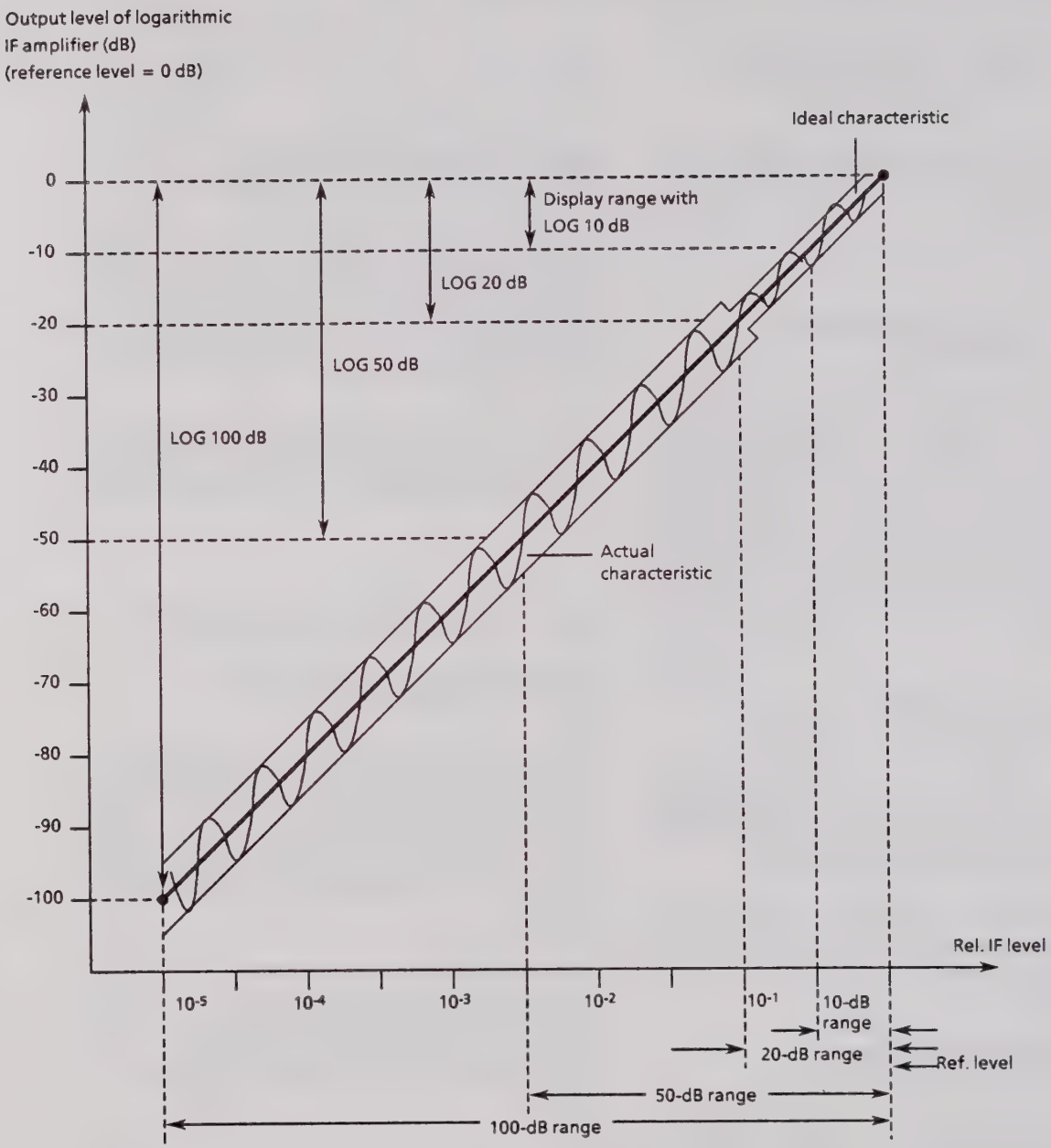

Fig. 4-1 Relative level ranges with LOG 100 dB to LOG 10 dB

Display modes LOG 1 dB and LIN
(See level diagram (Fig. 4-10)):

The analyzer operates in these two modes without a logarithmic amplifier in linear mode. A corresponding display is produced for LOG 1 dB under software control (see Fig. 4-2).

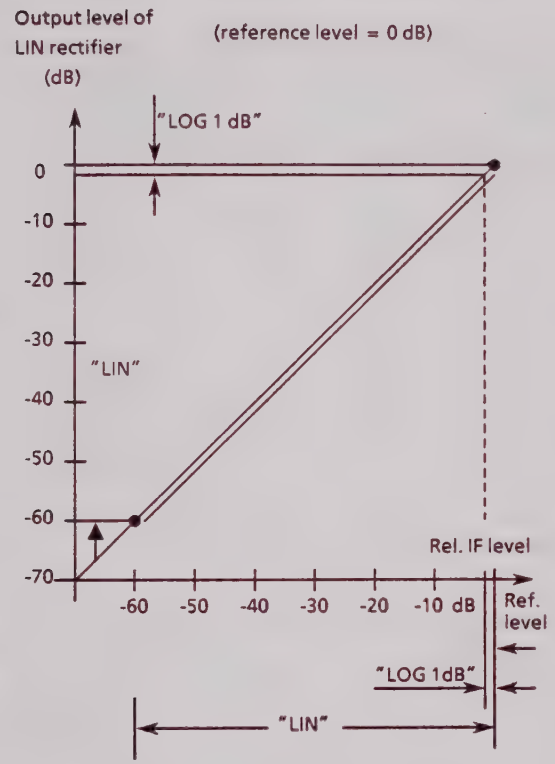

Fig. 4-2 Relative level ranges in modes LOG 1 dB and LIN

4.1.3 Frequency Accuracy and Phase Noise as Function of Display Range and Resolution Bandwidth

The frequency accuracy and phase noise depend on the display range and resolution bandwidth:

a) Display range >5 MHz, resolution bandwidth: no relevance

The analyzer operates with start and stop synchronization (see service manual of RF unit, Section 5.1).

This means that the phase noise of the YIG oscillator is not improved and the frequency error corresponds to the linearity error of the YIG oscillator.

b) Display range between 100 kHz and 5 MHz, resolution bandwidth >3 kHz

The analyzer operates with completely phase-synchronized frequency processing. This improves the phase noise of the YIG oscillator and the linearity error of the YIG oscillator becomes insignificant. The frequency is swept between the start and stop frequencies without interruption.

Resolution bandwidth >3 kHz

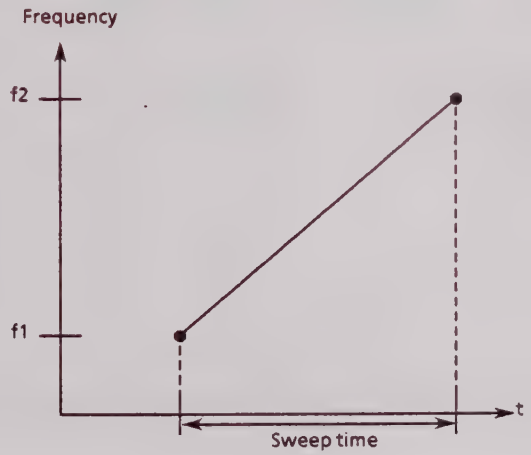

c) *Display range between 100 kHz and 5 MHz, resolution bandwidth ≤3 kHz*

The analyzer operates with completely phase-synchronized frequency processing except that the complete frequency sweep is divided into subranges. This results in waiting times (tw) in the synthesizer switching.

The spectral purity of the frequency processing is in this case improved.

Resolution bandwidth ≤3 kHz

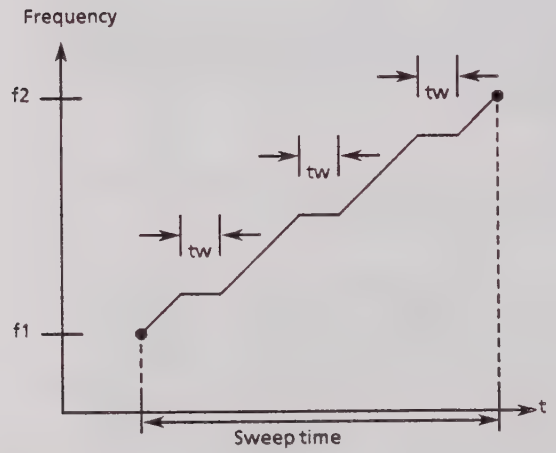

The waiting time tw occurs not more than once with display ranges <325 kHz, and once per 325-kHz range with display ranges >325 kHz.

The waiting time tw is increasingly reduced as the resolution bandwidth becomes smaller.

d) *Display range <100 kHz*

A further YIG synchronization circuit is switched on when changing the display range from ≥100 kHz to <100 kHz. This further improves the phase noise close to the carrier.

Table 4-1 Coupling of bandwidths from modules A31 and A32 of the display unit

Bandwidth	IF filter 1 (A31)	IF filter 2 (A32)
3 MHz	3 MHz	—
1 MHz	1 MHz	—
0.3 MHz	0.3 MHz	—
0.1 MHz	0.1 MHz	—
30 kHz	30 kHz	—
10 kHz	10 kHz	—
3 kHz	3 kHz	—
1 kHz	1 kHz	—
0.3 kHz	3 kHz	0.3 kHz
0.1 kHz	1 kHz	0.1 kHz
30 Hz	1 kHz	30 Hz
10 Hz	1 kHz	10 Hz

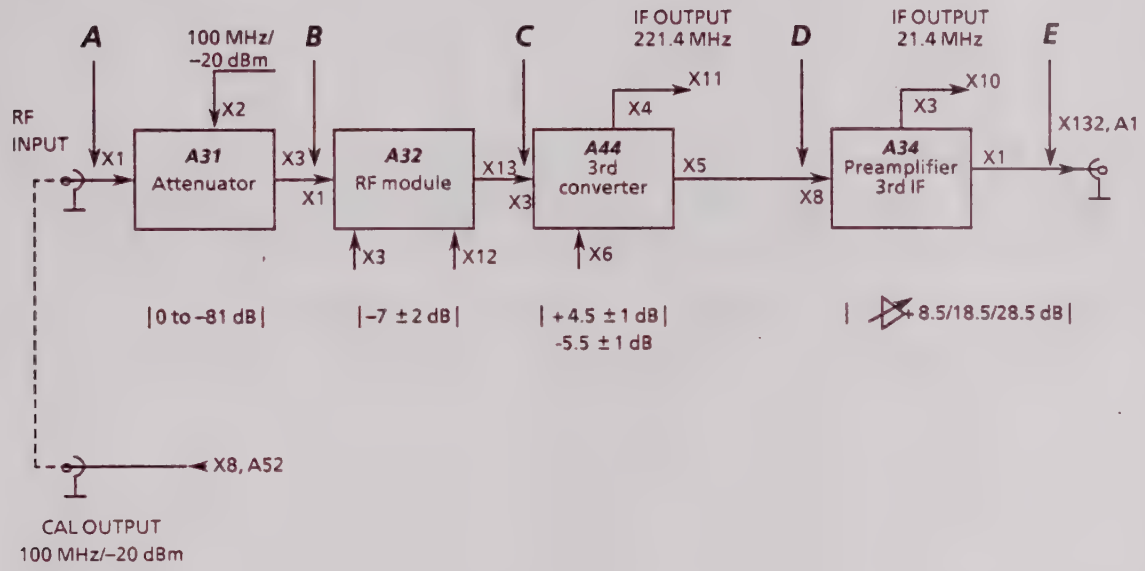

A	A31	B	A32	C	A44	D	A34	E
REF.LEVEL dBm	dB	dBm	dB	dBm	dB	dBm	dB ± Δ	dBm
+30	–60	–30	–7	–37	+4.5	–32.5	+18.5	–14
+20	–50	–30	–7	–37	+4.5	–32.5	+18.5	–14
+10	–40	–30	–7	–37	+4.5	–32.5	+18.5	–14
0	–30	–30	–7	–37	+4.5	–32.5	+18.5	–14
–10	–20	–30	–7	–37	+4.5	–32.5	+18.5	–14
–20	–10	–30	–7	–37	+4.5	–32.5	+18.5	–14
–30	–10	–40	–7	–47	+4.5	–42.5	+28.5	–14
–40	–10	–50	–7	–57	+4.5	–52.5	+28.5	–24
–50	–10	–60	–7	–67	+4.5	–62.5	+28.5	–34
–60	–10	–70	–7	–77	+4.5	–72.5	+28.5	–44
–70	–10	–80	–7	–87	+4.5	–82.5	+28.5	–54
–80	–10	–90	–7	–97	+4.5	–92.5	+28.5	–64
–90	–10	–100	–7	–107	+4.5	–102.5	+28.5	–74

Fig. 4-3 Level diagram of RF unit for operating mode NORMAL

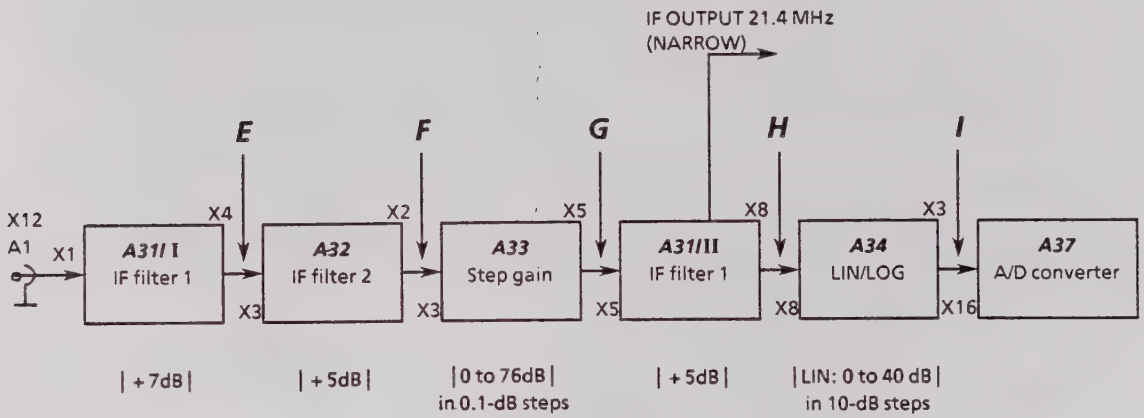

A31/ I	E	A32	F	A33	G	A31/II	H	A34	I
dB	dBm	dB	dBm	dB	dBm	dB	dBm		
+7	–7	+5	–2	+13	+11	+5	+15	—	
+7	–7	+5	–2	+13	+11	+5	+15	—	
+7	–7	+5	–2	+13	+11	+5	+15	—	2VDC
+7	–7	+5	–2	+13	+11	+5	+15	—	± 1mV
+7	–7	+5	–2	+13	+11	+5	+15	—	
+7	–7	+5	–2	+13	+11	+5	+15	—	
+7	–7	+5	–2	+13	+11	+5	+15	—	
+7	–17	+5	–12	+23	+11	+5	+15	—	
+7	–27	+5	–22	+33	+11	+5	+15	—	2VDC
+7	–37	+5	–32	+43	+11	+5	+15	—	± 1mV
+7	–47	+5	–42	+53	+11	+5	+15	—	
+7	–57	+5	–52	+63	+11	+5	+15	—	
+7	–67	+5	–62	+73	+11	+5	+15	—	
+7	–71	+5	–66	+76	+10	+5	+15	—	

Fig. 4-4 Level diagram of display unit for operating mode NORMAL

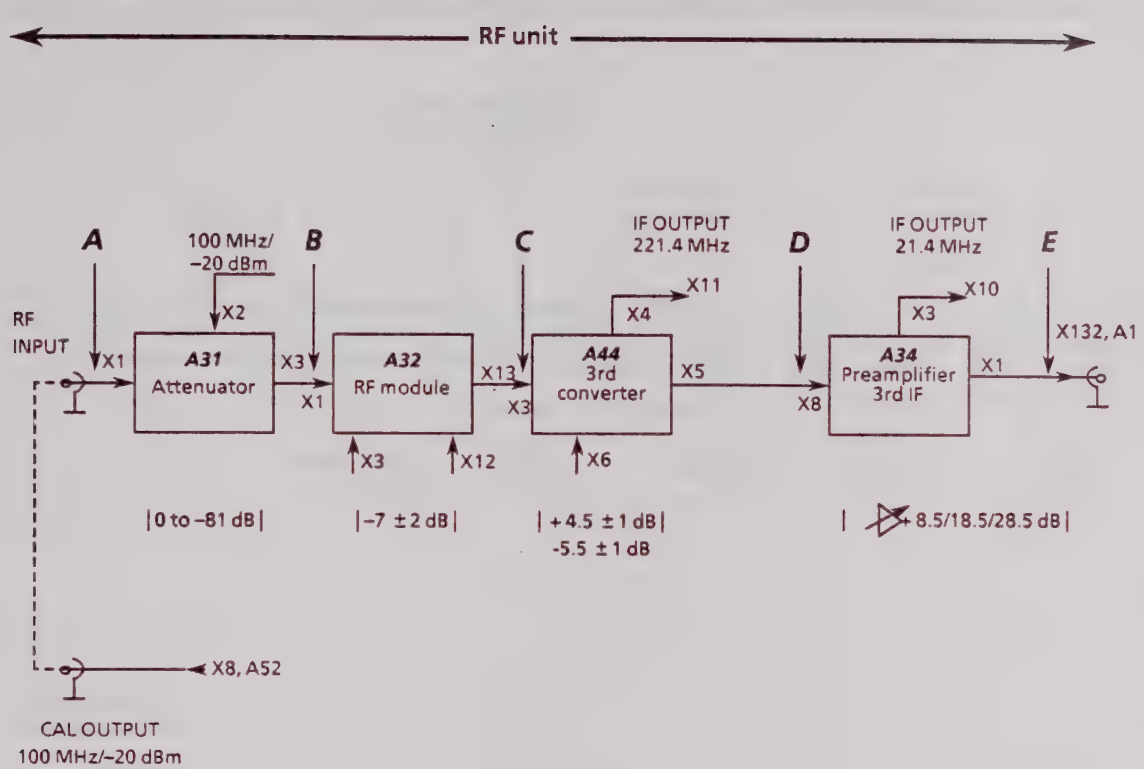

A	A31	B	A32	C	A44	D	A34	E
REF.LEVEL dBm	dB	dBm	dB	dBm	dB	dBm	dB ± Δ	dBm
+ 30	−50	−20	−7	−37	+ 4.5	−32.5	+ 18.5	−14
+ 20	−40	−20	−7	−37	+ 4.5	−32.5	+ 18.5	−14
+ 10	−30	−20	−7	−37	+ 4.5	−32.5	+ 18.5	−14
0	−20	−20	−7	−37	+ 4.5	−32.5	+ 18.5	−14
−10	−10	−20	−7	−37	+ 4.5	−32.5	+ 18.5	−14
−20	−10	−30	−7	−37	+ 4.5	−32.5	+ 18.5	−14
−30	−10	−40	−7	−47	+ 4.5	−42.5	+ 28.5	−14
−40	−10	−50	−7	−57	+ 4.5	−52.5	+ 28.5	−24
−50	−10	−60	−7	−67	+ 4.5	−62.5	+ 28.5	−34
−60	−10	−70	−7	−77	+ 4.5	−72.5	+ 28.5	−44
−70	−10	−80	−7	−87	+ 4.5	−82.5	+ 28.5	−54
−80	−10	−90	−7	−97	+ 4.5	−92.5	+ 28.5	−64
−90	−10	−100	−7	−107	+ 4.5	−102.5	+ 28.5	−74

Fig. 4-5 Level diagram of RF unit for operating mode LOW NOISE

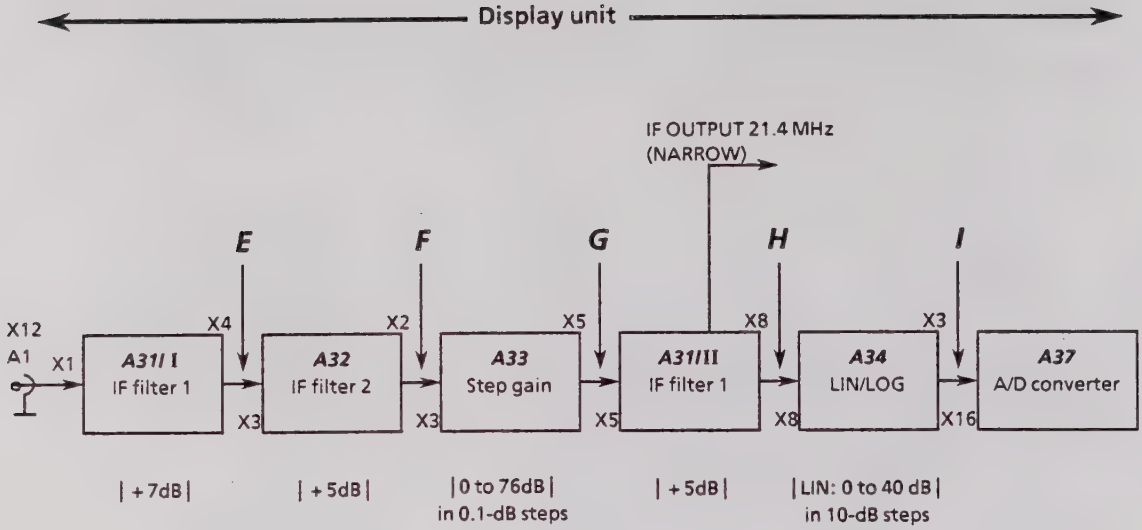

A31/ I	E	A32	F	A33	G	A31/II	H	A34	I
dB	dBm	dB	dBm	dB	dBm	dB	dBm		
+7	–7	+5	–2	+12	+10	+5	+15	—	
+7	–7	+5	–2	+12	+10	+5	+15	—	2VDC
+7	–7	+5	–2	+12	+10	+5	+15	—	± 1mV
+7	–7	+5	–2	+12	+10	+5	+15	—	
+7	–7	+5	–2	+12	+10	+5	+15	—	
+7	–7	+5	–2	+12	+10	+5	+15	—	
+7	–7	+5	–2	+12	+10	+5	+15	—	
+7	–17	+5	–12	+22	+10	+5	+15	—	2VDC
+7	–27	+5	–22	+32	+10	+5	+15	—	± 1mV
+7	–37	+5	–32	+42	+10	+5	+15	—	
+7	–47	+5	–42	+52	+10	+5	+15	—	
+7	–57	+5	–52	+62	+10	+5	+15	—	
+7	–67	+5	–62	+72	+10	+5	+15	—	
+7	–71	+5	–66	+76	+10	+5	+15	—	

Fig. 4-6 Level diagram of display unit for operating mode LOW NOISE

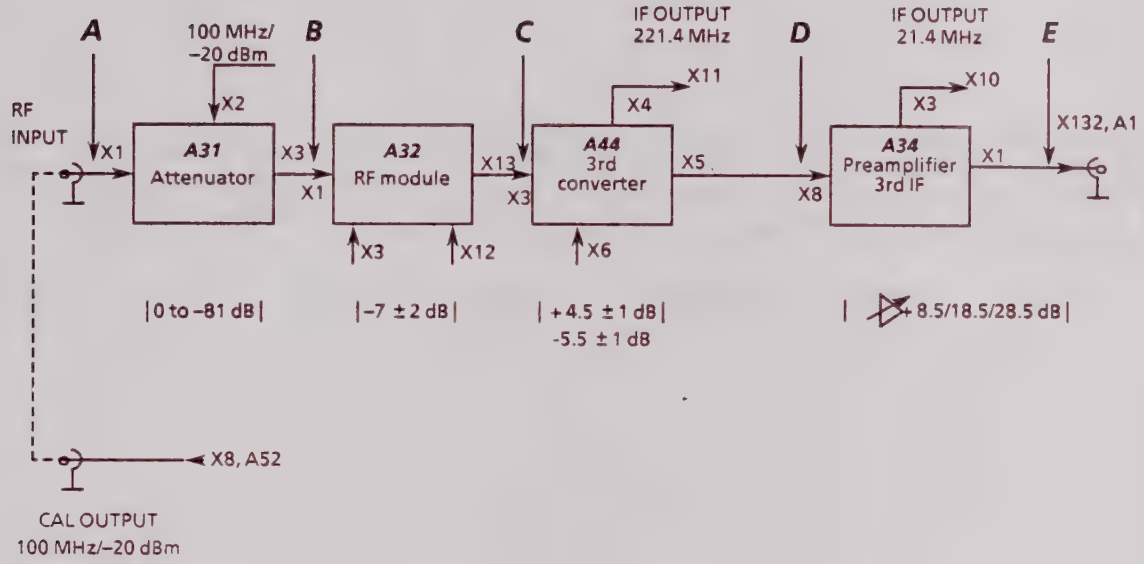

A	A31	B	A32	C	A44	D	A34	E
REF.LEVEL dBm	dB	dBm	dB	dBm	dB	dBm	dB ± Δ	dBm
+30	−70	−40	−7	−47	+4.5	−42.5	+18.5	−24
+20	−60	−40	−7	−47	+4.5	−42.5	+18.5	−24
+10	−50	−40	−7	−47	+4.5	−42.5	+18.5	−24
0	−40	−40	−7	−47	+4.5	−42.5	+18.5	−24
−10	−30	−40	−7	−47	+4.5	−42.5	+18.5	−24
−20	−20	−40	−7	−47	+4.5	−42.5	+18.5	−24
−30	−10	−40	−7	−47	+4.5	−42.5	+18.5	−24
−40	−10	−50	−7	−57	+4.5	−52.5	+28.5	−24
−50	−10	−60	−7	−67	+4.5	−62.5	+28.5	−34
−60	−10	−70	−7	−77	+4.5	−72.5	+28.5	−44
−70	−10	−80	−7	−87	+4.5	−82.5	+28.5	−54
−80	−10	−90	−7	−97	+4.5	−92.5	+28.5	−64
−90	−10	−100	−7	−107	+4.5	−102.5	+28.5	−74

Fig. 4-7 Level diagram of RF unit for operating mode LOW DISTORTION

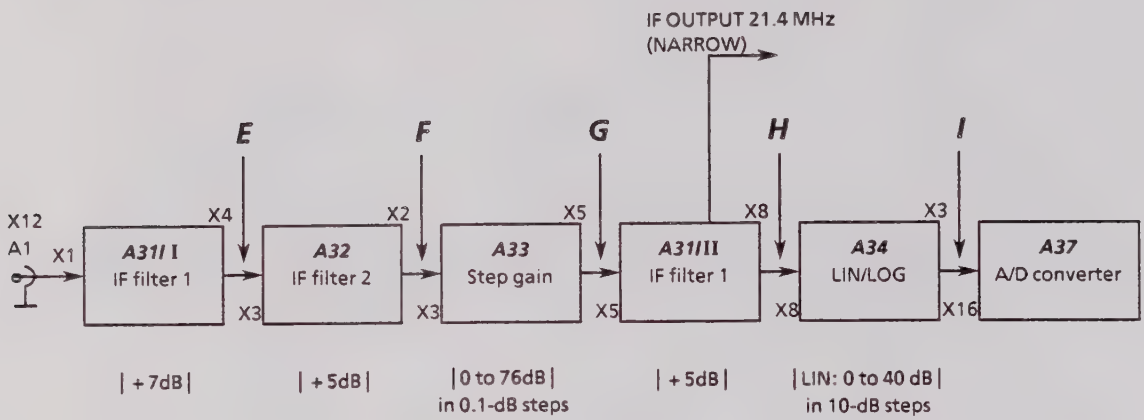

A31/ I	E	A32	F	A33	G	A31/II	H	A34	I
dB	dBm	dB	dBm	dB	dBm	dB	dBm		
+7	−17	+5	−12	+22	+10	+5	+15	—	
+7	−17	+5	−12	+22	+10	+5	+15	—	
+7	−17	+5	−12	+22	+10	+5	+15	—	2VDC
+7	−17	+5	−12	+22	+10	+5	+15	—	± 1mV
+7	−17	+5	−12	+22	+10	+5	+15	—	
+7	−17	+5	−12	+22	+10	+5	+15	—	
+7	−17	+5	−12	+22	+10	+5	+15	—	
+7	−17	+5	−12	+22	+10	+5	+15	—	
+7	−27	+5	−22	+32	+10	+5	+15	—	
+7	−37	+5	−32	+42	+10	+5	+15	—	2VDC
+7	−47	+5	−42	+52	+10	+5	+15	—	± 1mV
+7	−57	+5	−52	+62	+10	+5	+15	—	
+7	−67	+5	−62	+72	+10	+5	+15	—	
+7	−71	+5	−66	+76	+10	+5	+15	—	

Fig. 4-8 Level diagram of display unit for operating mode LOW DISTORTION

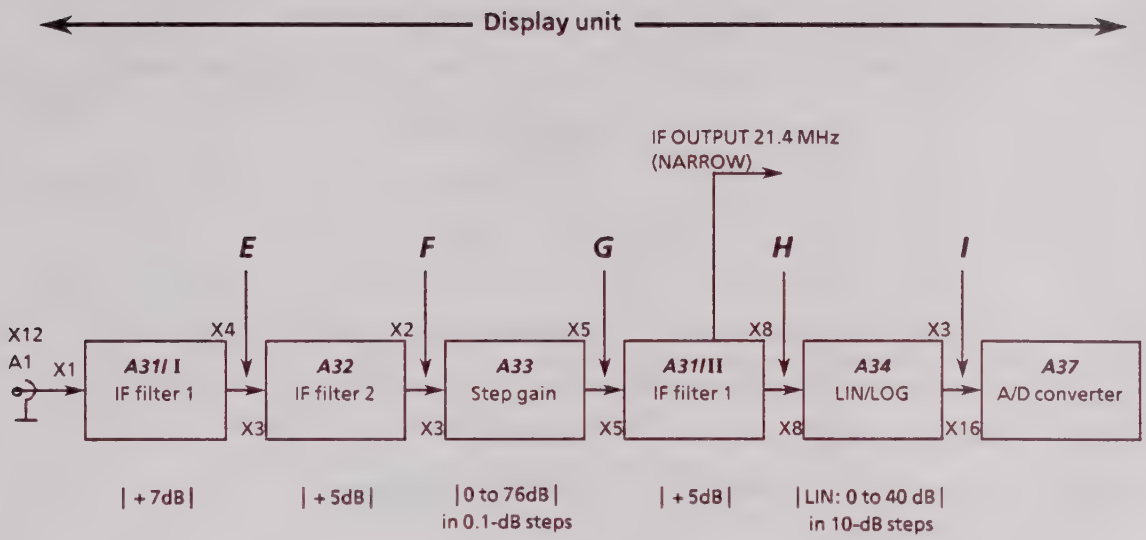

REF. LEVEL	*X12 A1*	*A31/ I*	*E*	*A32*	*F*	*A33*	*G*	*A31/II*	*H*	*A34*	*I*
dBm	dBm	dB	dBm	dB	dBm	dB	dBm	dB	dBm		VDC
0	–14	+ 7	–7	+ 5	–2	+ 12	+ 10	+ 5	+ 15	—	+ 2
–10	–24	+ 7	–17	+ 5	–12	+ 12	± 0	+ 5	+ 5	—	+ 1.8
–20	–34	+ 7	–27	+ 5	–22	+ 12	–10	+ 5	–5	—	+ 1.6
–30	–44	+ 7	–37	+ 5	–32	+ 12	–20	+ 5	–15	—	+ 1.4
–40	–54	+ 7	–47	+ 5	–42	+ 12	–30	+ 5	–25	—	+ 1.2
–50	–64	+ 7	–57	+ 5	–52	+ 12	–40	+ 5	–35	—	+ 1.0
–60	–74	+ 7	–67	+ 5	–62	+ 12	–50	+ 5	–45	—	+ 0.8
–70	–84	+ 7	–77	+ 5	–72	+ 12	–60	+ 5	–55	—	+ 0.6
–80	–94	+ 7	–87	+ 5	–82	+ 12	–70	+ 5	–65	—	+ 0.4
–90	–104	+ 7	–97	+ 5	–92	+ 12	–80	+ 5	–75	—	+ 0.2
–100	–114	+ 7	–107	+ 5	–102	+ 12	–90	+ 5	–85	—	0
–110	–124	+ 7	–117	+ 5	–112	+ 12	–100	+ 5	–95	—	≈ –0.1

Fig. 4-9 Level diagram for display modes LOG 110 dB to LOG 10 dB (operating mode NORMAL)

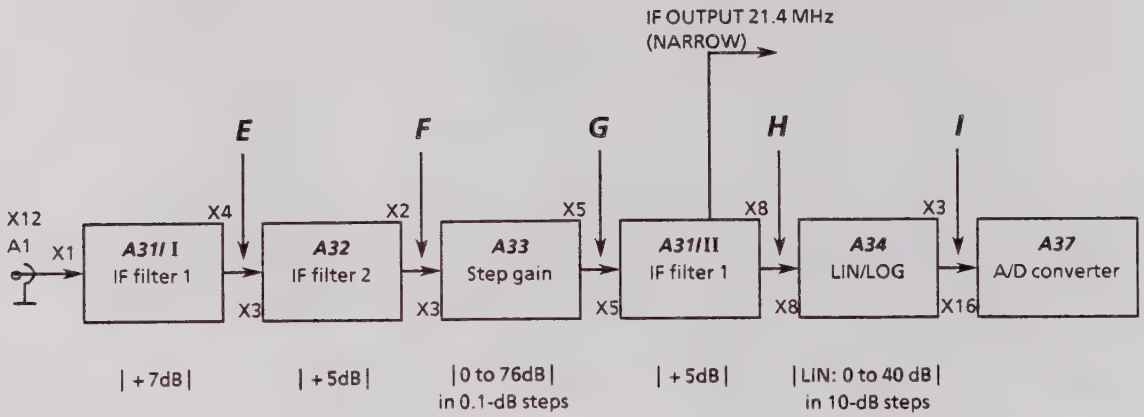

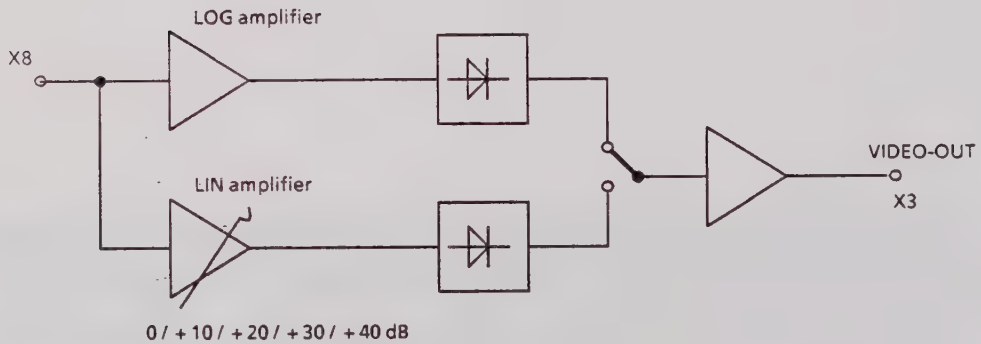

Basic circuit diagram of module A34

X12 A1	A31/ I	E	A32	F	A33	G	A31/II	H	A34	I
dBm	dB	dBm	dB	dBm	dB	dBm	dB	dBm	dB	VDC
–84	+7	–71	+5	–66	+76	+10	+5	+15	0	2
–94	+7	–81	+5	–76	+76	±0	+5	+5	+10	2
–104	+7	–91	+5	–86	+76	–10	+5	–5	+20	2
–114	+7	–101	+5	–96	+76	–20	+5	–15	+30	2
–124	+7	–111	+5	–106	+76	–30	+5	–25	+40	2

Fig. 4-10 Level diagram for display modes LOG 1 dB and LIN

4.2 Mechanical Design

The mechanical design of the two units RF unit and display unit is described in Section 5.2 of the corresponding service manual.

Connection of the two units (e.g. upon delivery):

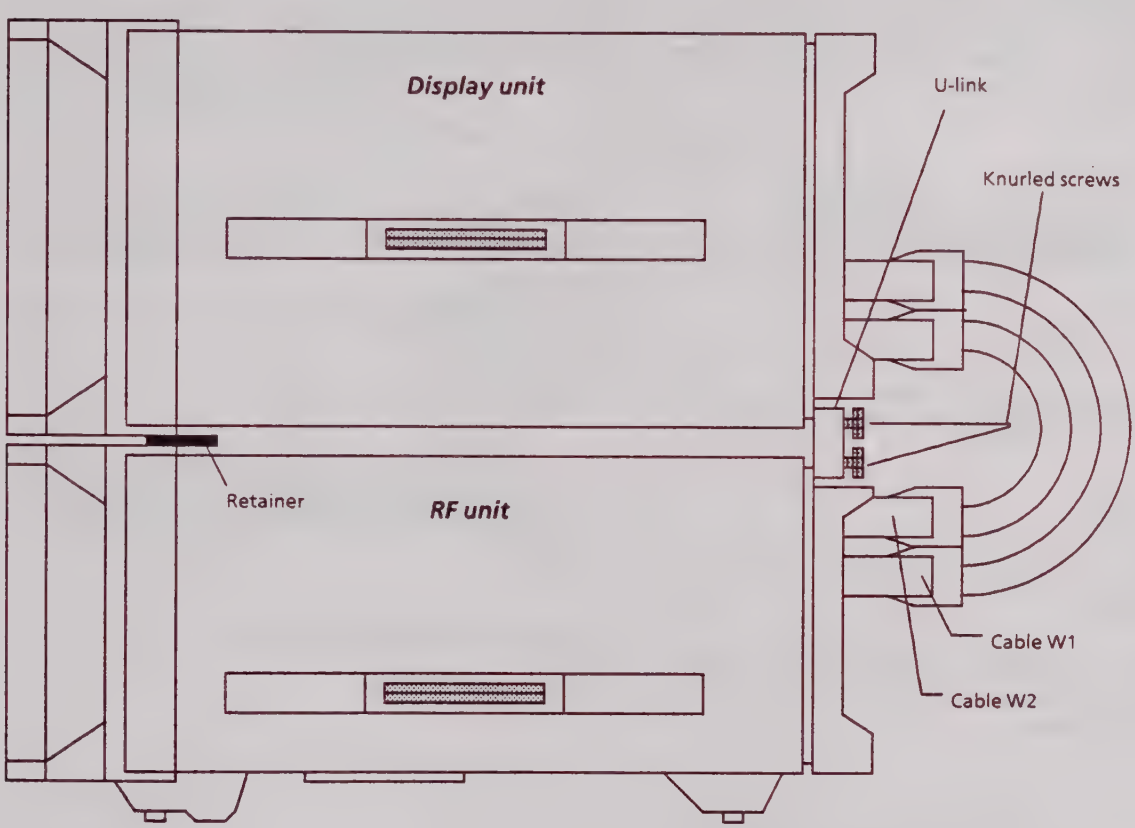

- Place the display unit on the RF unit so that the front panel of the display unit protrudes by approx. 3 cm.
- Insert the display unit in the retainer and push it towards the rear as far as it will go.
- Remove the two U-shaped links from the rear of the display unit, place them onto the rear metal blocks and tighten the four knurled screws.
- Connect the cables W1 and W2 supplied as accessories and install the handles.

4.3 Adjusting the Complete Instrument

It is recommended to carry out the adjustments described in this section only if the characteristics of the two units are correct in accordance with the test in Section 5.3 of the corresponding service manual. The adjustment under 4.3.1 largely determines the level measuring accuracy, that under 4.3.2 the frequency accuracy. Allow the instrument to reach a stable temperature (warm-up time >1 hour).

4.3.1 Adjusting the Calibration Output Level

Measuring equipment:

Power Meter NRV (828.2511.02)
Precision Power Sensor NRV-Z2 (828.3218.02)

Adjustment:

a) Calibrate the power meter after allowing to warm up.

b) Connect the sensor directly (via a suitable loss-free adapter) to the socket CAL OUTPUT of the analyzer.

c) Level display on power meter:
Nominal value –20 dBm ± 0.1 dB,
Adjust using R88 on module "Reference 2" (A52).

d) Connect socket CAL OUTPUT to socket RF INPUT using a coaxial cable with a known attenuation a_K at 100 MHz.

e) Perform the following setting:

PRESET
CF 100 MHz
SPAN 10 kHz
RBW 3 kHz
REF.LEV. -18 dBm
LEVEL RANGE LIN
Switch on MKR,
Press MENU → and REF.FIXED.

f) Enter SF 1.52.01 and set to Δ MKR level + a_K ± 0.05 dB on the module "Reference 2" (A52) using R75.

g) Enter SF 1.52.00 and remove cable.

Test setup for 4.3.1:

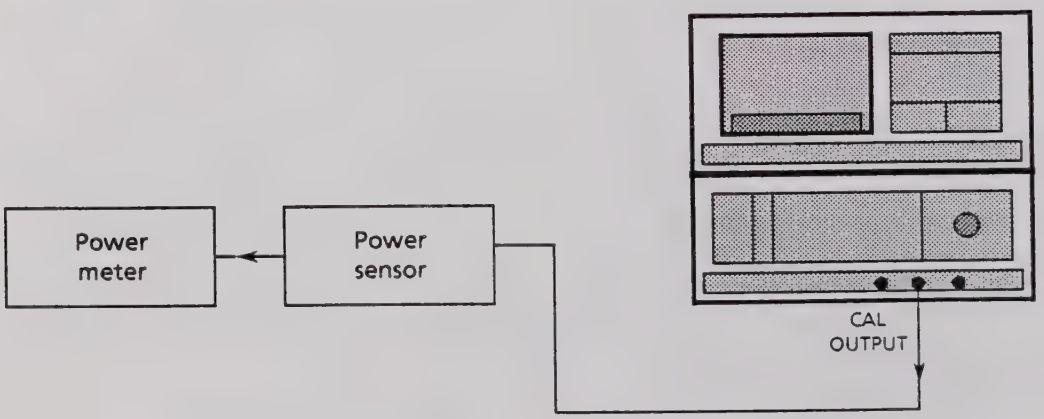

4.3.2 Adjusting the Internal Reference Oscillator

Measuring equipment:

Frequency Standard XSC (299.4011.02)
Frequency counter or frequency error multiplier

Adjustment:

a) Allow the frequency standard to warm up and then connect to the external reference input of the frequency counter or frequency error multiplier.

b) Connect the socket 10 MHz REF at the rear of the RF unit to the input of the frequency counter or frequency error multiplier.

c) Set a resolution of $1x10^{-9}$ on the frequency counter or frequency error multiplier.

d) Permissible deviation of reference frequency: $< 1 \times 10^{-7}$
Adjust to $< 1 \times 10^{-8}$ after allowing at least 4 hours to warm up using the adjustment screw on the reference oscillator (OXCO) on the module reference 1 (A51).

4.3.3 Adjusting the Reference Level

Note: Before performing this adjustment, proceed according to section 4.3.1.

a) Perform the following setting:

PRESET
SPEC.-FUNC. Cal. Corr. off
CF 100 MHz
SPAN 10 kHz
RBW 3 kHz
REF.LEV. -18 dBm
LEVEL RANGE LIN
SPEC.-FUNC. SF 1.52.01

b) Switch on MKR and adjust to -20 dBm ±0.1 dB on the module "Step Gain" (A33) using R155.

c) Enter SPEC.FUNC. SF 1.52.00.

Test setup for 4.3.2:

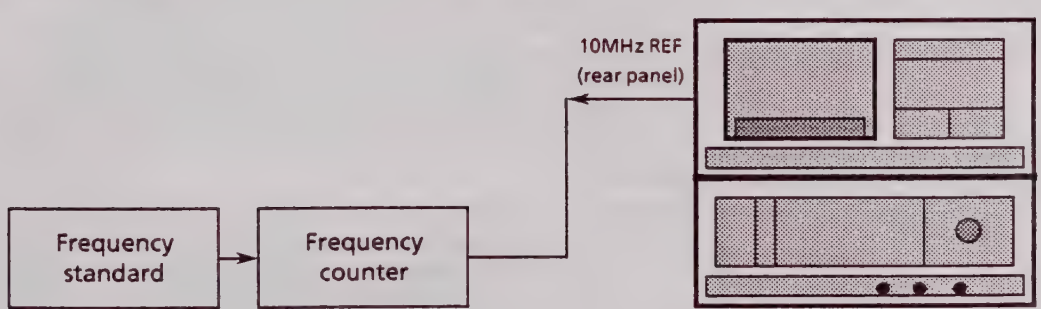

4.4 Testing the Complete Instrument

In order to test the complete instrument, remove the cover panels from both units (see Section 5.2) and connect using the cable set FZ-2 (811.0304.02).

Switch on both units and wait at least 1 hour before starting the test.

The tolerances of the IEC-714 standard should be adhered to.

4.4.1 Testing the Power Supplies

See Section 5.3 and the test for power supply (A21, A22) of the display unit and RF unit.

4.4.2 Testing the Colour Monitor

See Section 5.3 and the tests for monitor (A51), video board (A52) and socket board (A53) of the display unit.

4.4.3 Testing the Calibration Output Level

See Section 4.3.1 and the test for reference 2 (A52) of the RF unit.

4.4.4 Testing the Internal Reference Frequency

See Section 4.3.2 and the test for reference 1 (A51) of the RF unit.

4.4.5 Testing the Logarithmic Display

Measuring equipment:

Signal generator 100 MHz / –10 dBm
Attenuation set 0 to 120 dB/inherent error < 1 % of attenuation value/step size 0.1 dB or fixed attenuation pads.

Test procedure:

(RBW 3 kHz, SPAN 30 kHz, REF. LEVEL –20 dBm)

Vary the input level at the socket RF INPUT of the analyzer in the logarithmic ranges 110 dB/100 dB/50 dB/20 dB/10 dB/1 dB using the attenuation set according to the following table (following calibration at full scale = REF. LEVEL -20 dBm).

Range	Step size	Max. deviation at
0 to 10 dB	1 dB	–10 dB < 1 dB
10 to 20 dB	2 dB	–20 dB < 1.5 dB
20 to 50 dB	5 dB	–50 dB < 1.5 dB
50 to 100 dB	5 dB	–95 dB < 1.5 dB
100 to 110 dB	5 dB	–105 dB < 5 dB

Test setup for 4.4.5:

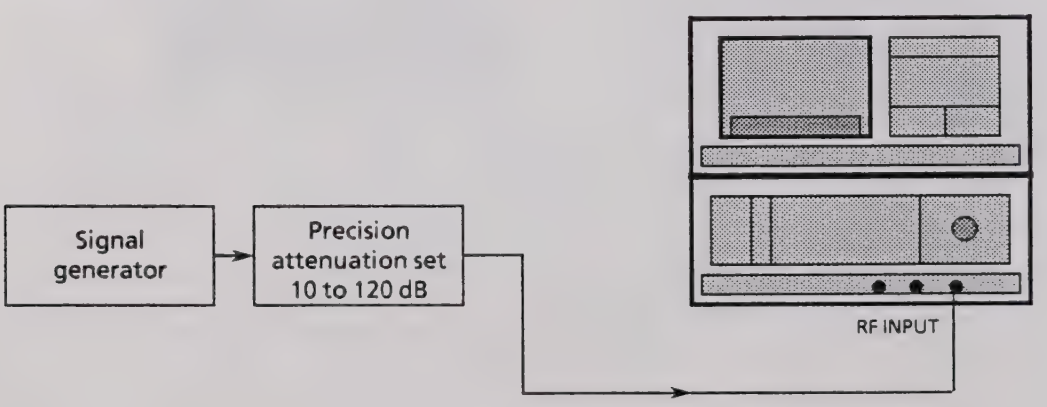

4.4.6 Testing the Linear Display and the Display LOG 1 dB

Test setup as in Section 4.4.5.

Measuring equipment as in Section 4.4.5.

Test procedure:

a) LIN

Following calibration at full scale, determine the level display at the following values:

100% ≙ −20dB INPUT

80 %	−1.94dB
60 %	−4.44dB
40 %	−7.96dB
20 %	−13.98dB
10 %	−20.00dB
5 %	−26.02dB

ALL RELATIVE TO INPUT LEVEL.

The permissible deviation is 5 %.

b) LOG 1 dB

Following calibration at full scale with LOG 100 dB, switch over to LOG 1 dB and determine the level deviation. Subsequently carry out a short calibration and determine the level deviation again.

Following calibration at full scale with LOG 1 dB, determine the level display in 0.1-dB steps.

4.4.7 Testing the Frequency-independent Level Display

The frequency-independent level display is tested at 100 MHz since this is the reference frequency of the internal, automatic level calibration routine.

The calibration output signal can be used for levels <-20 dBm, an external generator is used together with a power meter for levels >-20 dBm.

The test is carried out in linear mode, 2 dB below full scale.

Measuring equipment:

Power Meter NRV (828.2511.02)
Precision Power Sensor NRV-Z2 (828.3218.02)
Precision power divider
Signal Generator SMGU (819.0010.52)
Power amplifier 100 MHz > + 30 dBm, 50 Ω

Test procedure:

Setting: LIN dB, RBW 10 Hz, VBW 1 Hz, SPAN 0 Hz

a) Level ≤−20 dBm

At a test level 2.0 dB below the reference value, the external precision attenuation set, and thus the reference value, is varied

from 2.0 to 2.9 dB in 0.1-dB steps
from 3.0 to 11.0 dB in 1-dB steps
from 12.0 to 112 dB in 10-dB steps.

b) Level >−20 dBm

For levels > - 20 dBm (max. + 27 dBm), an external generator with a corresponding power amplifier is connected via a precision power divider to the connector RF INPUT of the analyzer as well as to the sensor of the power meter.

Change the reference level starting at -22 dBm (= reference = 0) in 10-dB steps up to + 28 dBm and the RF level from -22 dBm to −12/-2/ + 8/ + 18/ + 27 dBm.

Correction:

In the case of level display deviations in excess of those in the data sheet, determine the out-of-tolerance module using the level diagrams Figs. 4-3 and 4-4 and adjust accordingly.

Test setup for 4.4.7 (for level ≤–20 dBm):

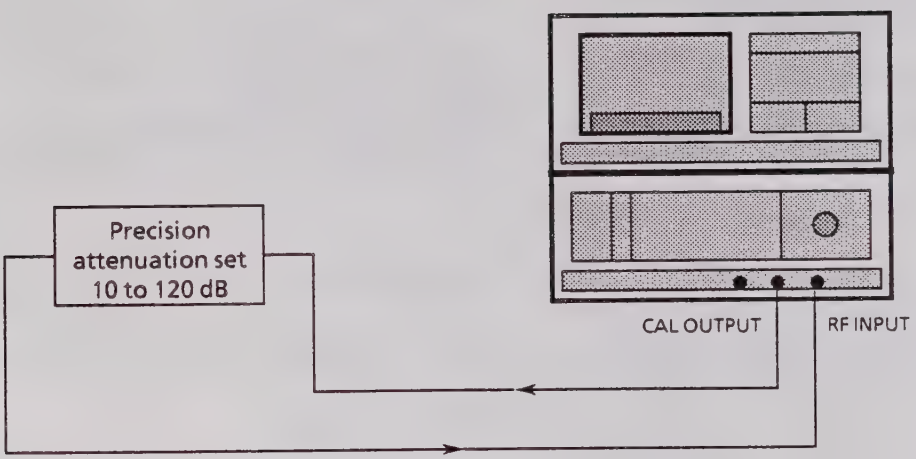

Test setup for 4.4.7 (for level ≥–20 dBm):

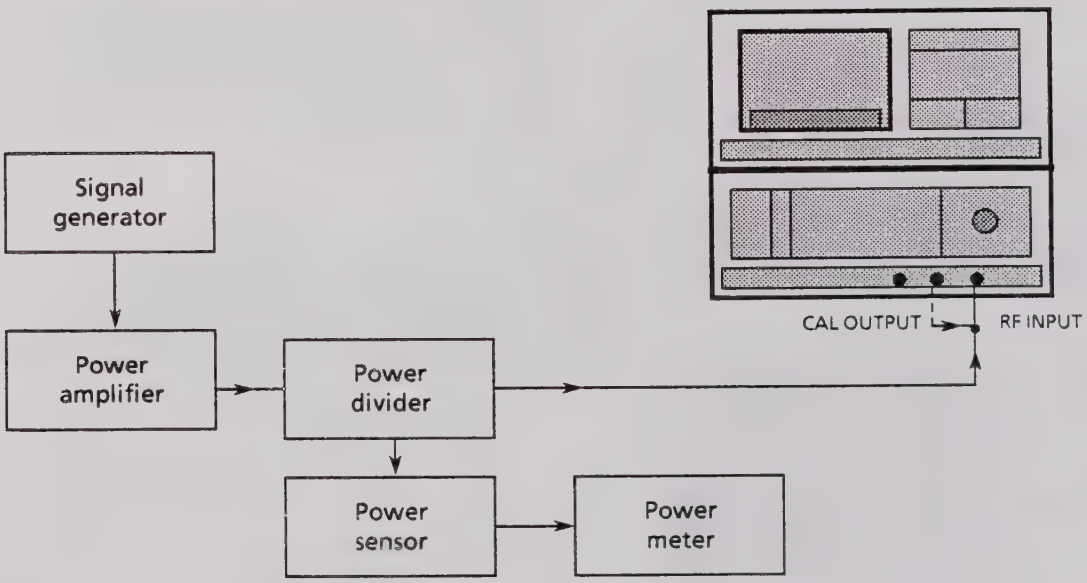

4.4.8 Testing the Resolution Bandwidths

When testing the resolution bandwidths, the following parameters are important both in the calibrated and uncalibrated states of the device:

3-dB bandwidth calibrated/uncalibrated;
gain at each bandwidth calibrated/uncalibrated;
tuning error of centre frequency calibrated/uncalibrated;
skirt selectivity or shape factor 60 dB/3 dB.

The following are determined in a complete calibration:

- The uncalibrated values from the correction table.
- The 3-dB bandwidth with the "N-dB down" marker in LOG 10 dB mode.
- The gain differences via PEAK SEARCH in LOG 10 dB mode.
- The skirt selectivity via both "N-dB down" markers and the special function "CAL.COR. OFF" in LOG 100 dB mode.

The permissible deviations are listed in the data sheet.

4.4.9 Testing the Frequency-dependent Level Display

The frequency-dependent level display is tested at several frequency points with reference levels between -20 dBm and +27 dBm in LOG 10 dB mode.

Test setup as in Section 4.4.7, *test procedure* analog to determination of EEPROM correction data.

Measuring equipment as in Section 4.4.7, except signal generator and power amplifier 100 Hz to 5.0 GHz/> +27 dBm.

Test procedure:

Measure at at least 50 frequencies and reference levels from -20 dBm to +30 dBm in 10-dB steps.

A computer-controlled test assembly is recommendable for control and evaluation.

Procedure with impermissible deviations:

Since the frequency response of the RF module is compensated together with the frequency response of the RF divider switch of the coaxial cabling and the YIG synchronization, the frequency responses of the RF module and the RF divider switch must be determined separately and compared with the nominal data. The module with the impermissible deviation can then be found.

4.4.10 Testing the AC/DC Switchover

Test setup as in Section 4.4.7.

Measuring equipment as in Section 4.4.7.

Test procedure:

Determine the difference in the level displays when switching from DC to AC coupling at one test level in mode LOG 10 dB and at several frequencies (e.g. as in Section 4.4.9).

4.4.11 Testing the Frequency-independent Sensitivity

Terminate the connector RF INPUT of the instrument with a 50-Ω resistor.

Set a reference level of -70 dBm at an RF attenuation of 0 dB.

Select the various resolution bandwidths at a frequency of 4799 MHz with signal NOISE selected and determine the inherent noise.

Span settings:

RBW	Sensitivity	RBW	Sensitivity
10 Hz	<-140 dBm	10 kHz	<-110 dBm
30 Hz	<-135 dBm	30 kHz	<-105 dBm
100 Hz	<-130 dBm	100 kHz	<-100 dBm
300 Hz	<-125 dBm	300 kHz	<-95 dBm
1 kHz	<-120 dBm	1 MHz	<-90 dBm
3 kHz	<-115 dBm	3 MHz	<-85 dBm

4.4.12 Testing the Frequency-dependent Sensitivity

Proceed as in Section 4.4.11 but measure at the following frequencies with a resolution bandwidth of 10 Hz and a span of 100 Hz:

Frequency	Sensitivity
30 Hz	<–80 dBm
190 Hz	<–85 dBm
990 Hz	<–85 dBm
9.99 kHz	<–105 dBm
99.99 kHz	<–110 dBm
999 kHz	<–115 dBm
19.9 MHz	<–130 dBm
99.9 MHz	<–140 dBm
199.9 MHz	<–140 dBm
299.9 MHz	<–140 dBm
:	:
:	:
4799.9 MHz	<–140 dBm
4999.9 MHz	<–137 dBm

4.4.13 Testing the Spurious

Settings as in Section 4.4.11.

a) Oscillator feedthrough

Nominal value: <–15 dBm (RF attenuation: 0 dB)

b) Low-frequency spurious
(span 100 Hz, resolution bandwidth 10 Hz)

Power supply 50/60/400 Hz
Video frequency ~50 Hz
Nominal value: <–95 dBm
Line frequency ~30 kHz
Internal frequency 100 kHz
Nominal value: <–110 dBm

c) High-frequency spurious
(full span, resolution bandwidth 30 kHz)

Reference frequency 10 MHz
Reference frequency 20 MHz
Reference frequency 100 MHz
Reference frequency 200 MHz
Noise signals by mixing

Nominal value: <–110 dBm

4.4.14 Testing the Spectral Purity

The spectral purity of the internal oscillators can only be tested using signals with a very high spectral purity. It is recommendable to use a low-noise crystal oscillator with a frequency of 100 MHz and a comb-line generator.

Measuring equipment:

Low-noise 100-MHz crystal oscillator
Comb-line generator 100 MHz to 5 GHz.

Test procedure:

Tune the analyzer to n x 100 MHz (n = 1 to 50), set the signal to reference level and analyze the sideband noise using various spans and resolution bandwidths. Signal type NOISE (setting via coupled function menu → MANUAL → NOISE).

Recommended frequencies: 100 MHz, 900 MHz, 1800 MHz, 2700 MHz, 3600 MHz, 4500 MHz.

a) Phase noise

The measurement is carried out using the phase noise marker (marker side menu).

Carrier offset	Resolution bandwidth	Span	Nominal value (100 MHz)
>100 Hz	6 Hz	200 Hz	–95 dBc/1 Hz
>1 kHz	100 Hz	2 kHz	–105 dBc/1 Hz
>10 kHz	1 kHz	20 kHz	–110 dBc/1 Hz
>30 kHz	1 kHz	60 kHz	–110 dBc/1 Hz
>100 kHz	10 kHz	200 kHz	–115 dBc/1 Hz
>300 kHz	10 kHz	600 kHz	–120 dBc/1 Hz

With fe > 100 MHz:

Frequency offset < 1 kHz:
Linear increase of phase noise with fe to ≤ + 12 dB at 5 GHz.
Frequency offset ≥ 1 kHz:
Linear increase of phase noise with fe up to ≥ + 6 dB at 5 GHz.
(Applicable at an ambient temperature between + 10 to + 35°C).

b) Fixed-frequency noise signals

Carrier offset	Resolution bandwidth	Span	Nominal value
50/60 Hz	6 Hz	400 Hz	–70 dBc
400 Hz	30 Hz	3 kHz	–70 dBc
approx. 30 kHz	3 kHz	300 kHz	–80 dBc
100 kHz	3 kHz	1 MHz	–90 dBc
200 kHz	10 kHz	1 MHz	–90 dBc

c) Variable-frequency noise signal

Carrier offset	Resolution bandwidth	Span	Nominal value
100 Hz to 500 Hz	6 Hz	1 kHz	<–75 dBc
500 Hz to 2 kHz	30 Hz	5 kHz	<–75 dBc
2 kHz to 10 kHz	100 Hz	20 kHz	<–75 dBc
10 kHz to 50 kHz	300 Hz	100 kHz	<–75 dBc
50 kHz to 200 kHz	1 kHz	500 kHz	<–75 dBc
200 kHz to 1 MHz	3 kHz	2 MHz	<–75 dBc

Note:

The values shown at the side do not apply to fixed-frequency noise signals.

Test setup for 4.4.14:

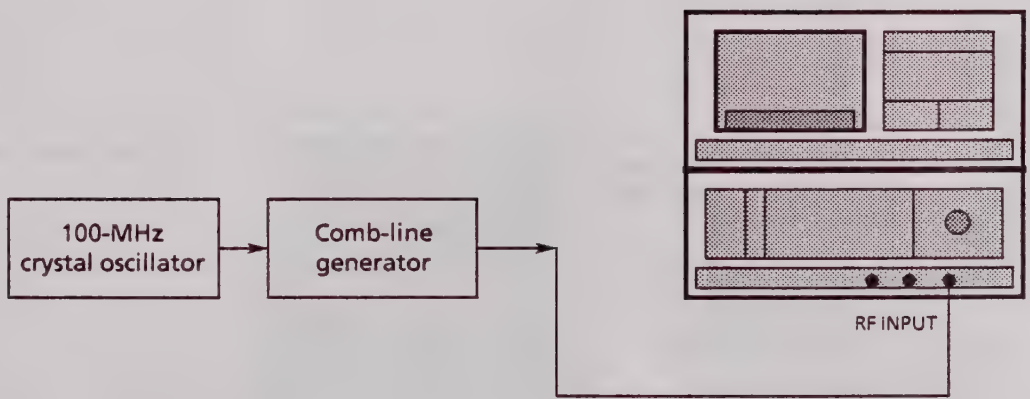

4.4.15 Testing the Spurious FM

Measuring equipment:

FM deviation meter f = 21.4 MHz

Test procedure:

a) A special function is used to measure the spurious FM in the unsynchronized state (span > 5 MHz). The unsynchronized frequency sweep is switched off using SF 1.43.01. The spurious FM can then be measured.

Resolution bandwidth on analyzer: 3 MHz

Test bandwidth of deviation meter: 10 kHz

b) In order to measure the spurious FM in the synchronized state, the analyzer is tuned to crystal lines according to Section 4.4.14 which are analyzed at a span of 100 Hz with a resolution bandwidth of 6 Hz. If the irregularities on the filter edge caused by spurious FM correspond to < 10% of the interval between two frequency grid lines, the spurious FM is < 1 Hz.

Receive frequency	Spurious FM $\frac{P^+ \div P^-}{2}$
0 MHz	<10 kHz
400 MHz	<10 kHz
900 MHz	<10 kHz
1300 MHz	<10 kHz
1800 MHz	<10 kHz

Test setup for 4.4.15:

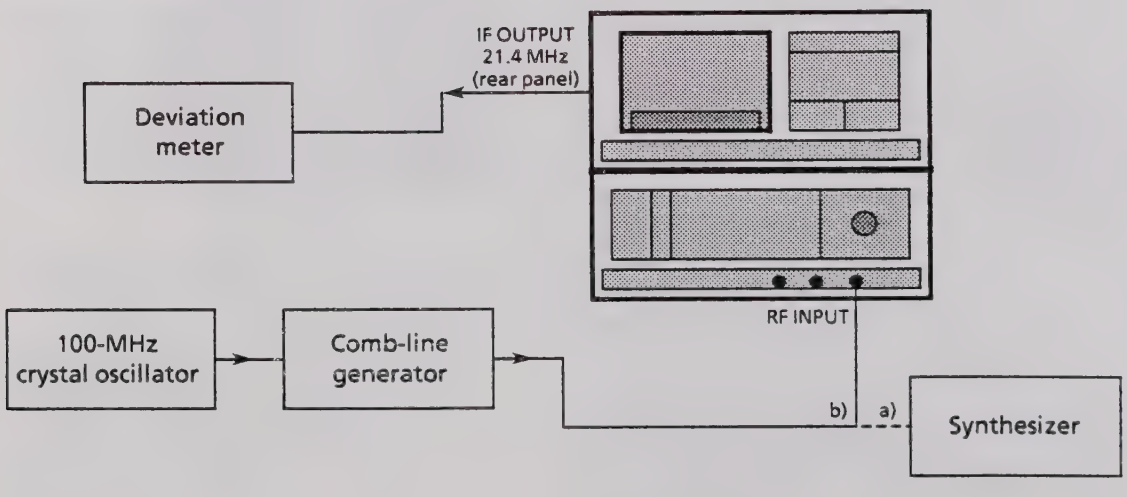

4.4.16 Testing the Centre Frequency Accuracy

Test setup:

As in Section 4.4.14 except that the 100-MHz crystal oscillator is synchronized with a reference source of $< 1 \times 10^{-9}$ accuracy.

Test procedure:

The frequency is determined with various spans around the 2500-MHz crystal line using the marker and the internal frequency counter.

Span	Deviation
Full	
1000 MHz	
500 MHz	
200 MHz	
100 MHz	
50 MHz	
20 MHz	
10 MHz	
5 MHz	
<5 MHz	

4.4.17 Testing the Span Accuracy

Measuring equipment:

Signal generator 10 MHz to 5 GHz

Test procedure:

The actual start and stop frequencies are determined at different frequencies and spans using the signal generator. The difference between two frequencies is compared with the set span.

Start frequency [MHz]	Stop frequency [MHz]	$\lvert \Delta \rvert$ deviation $\lvert$
0	5000	$< 5 \times 10^{-3}$
0	2500	$< 5 \times 10^{-3}$
900	1800	$< 5 \times 10^{-3}$
800	1000	$< 5 \times 10^{-3}$
950	1050	$< 5 \times 10^{-3}$
990	1010	$< 5 \times 10^{-3}$
997.5	1002.5	$< 5 \times 10^{-3}$
99	101	$< 5 \times 10^{-3}$
1799	1801	$< 5 \times 10^{-3}$
199.5	200.5	$< 5 \times 10^{-3}$
1699.5	1700.5	$< 5 \times 10^{-3}$
299.9	300.1	$< 5 \times 10^{-3}$
1599.99	1600.1	$< 5 \times 10^{-3}$
399.999	400.001	$< 5 \times 10^{-3}$

Test setup for 4.4.17:

4.4.18 Testing the Sweep Time

Measuring equipment:

Storage oscilloscope 20 µs to 2000 s

Test procedure:

The active sweep time is determined at the saw-tooth output SWEEP OUTPUT.

Resolution bandwidth >3 kHz:

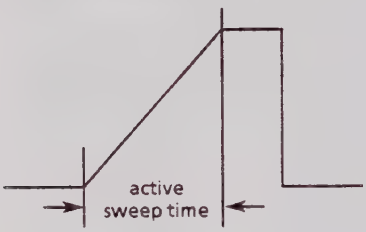

Resolution bandwidth ≤3 kHz, span <5 MHz:

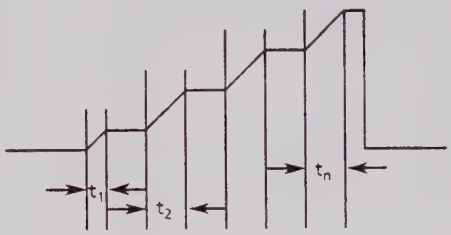

$\Sigma (t_1 + t_2 + \ldots + t_n)$ = active sweep time

Test setup for 4.4.18:

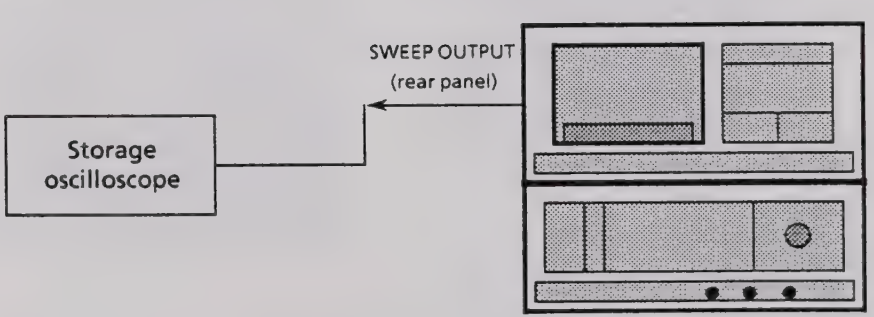

4.4.19 Testing Nonlinearities

Measuring equipment:

2 generators 100 Hz to 5 GHz
2 lowpass filters 50 Ω
1 power combiner

Test procedure:

a) Harmonics

A signal whose level corresponds to the reference value and whose harmonics is > 100 dB is applied to the connector RF INPUT of the device in operating mode NORMAL.

The harmonics displayed on the analyzer must be > 70 dB (improvement in operating mode LOW DISTORTION: 10 dB).

b) 3rd-order intermodulation

Two signals with a frequency offset >100 kHz, whose levels correspond to the reference value and whose intermodulation is >100 dB are applied to the connector RF INPUT in operating mode NORMAL.

The intermodulation displayed on the analyzer must be > 75 dB (improvement in operating mode LOW DISTORTION : 20 dB).

Test setup for 4.4.19:

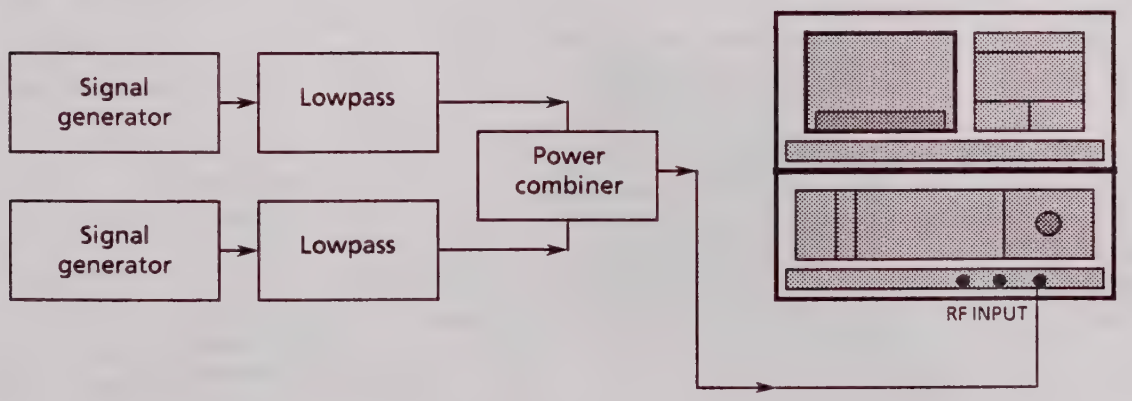

4.4.20 Testing the 1-dB Compression

Measuring equipment:

Generator 100 Hz to 5 GHz
RF power meter
RF power sensor

Test procedure:

Recommended test frequencies:
1 MHz, 500 MHz, 1000 MHz, 2000 MHz, 4000 MHz, 5000 MHz.

Connect the RF power meter to the broadband IF output (connector IF OUTPUT 21.4 MHz) using an RF power sensor.

The difference between the input level at the socket RF INPUT and the IF output level should be < 1 dB in the level range from -30 dBm to 0 dBm at the 1st mixer.

4.4.21 Testing Nonharmonics

Measuring equipment:

Generator 10 MHz to 18 GHz

Test procedure:

Apply a signal whose frequency corresponds to an image frequency or an intermediate frequency to the connector RF INPUT of the instrument.

The generator level corresponds to the reference value of the nominal receive frequency.

Test setup for 4.4.20:

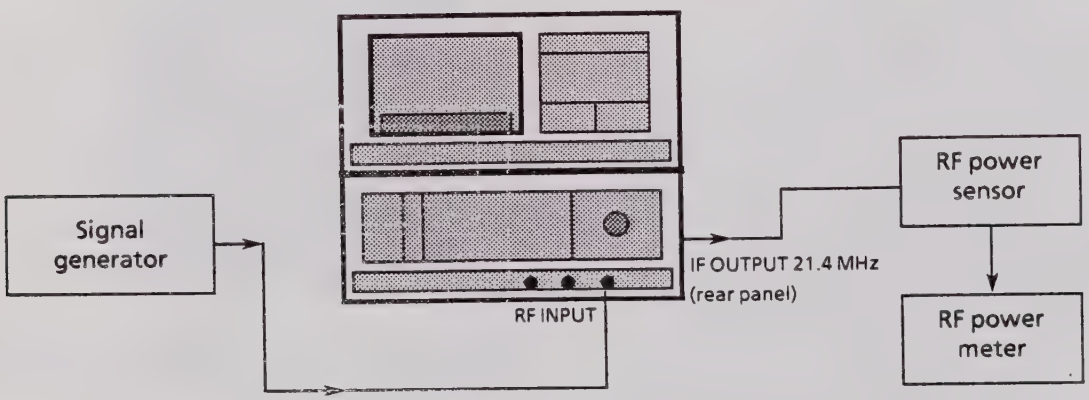

4.4.22 Testing the Reflection Coefficient (VSWR)

Measuring instrument:

Signal generators 100 Hz to 5 GHz
Directional coupler or VSWR bridge
RF power meter
RF power sensor

Test procedure:

Measure the difference in level on the power meter at output ① when loaded and open circuit. The difference corresponds to the return loss and thus the reflection coefficient (VSWR).

Test:

RF INPUT at 0 dB / ≤ 10 dB RF attenuation
CAL OUTPUT (test level >–10 dBm).

4.4.23 Testing the Demodulation

Measuring equipment:

Signal generator with modulation facility
Harmonic distortion meter

Test procedure:

Demodulate the modulated signal in the level range of the reference value up to 70 dB below the reference value in AM or FM mode.

a) AM demodulation

Modulation depth 10 % / 100 %
Max. AF: 20 kHz
Set IF bandwidth = 2 x AF
AF harmonic distortion < 10% (between modulation depths 5 and 95 %)

b) FM demodulation

Span ranges: 200 Hz/2 kHz / 20 kHz / 200 kHz
Max. AF: 20 kHz
Set IF bandwidth = 2 x (AF + span)
AF harmonic distortion < 10 %.

Test setup for 4.4.22:

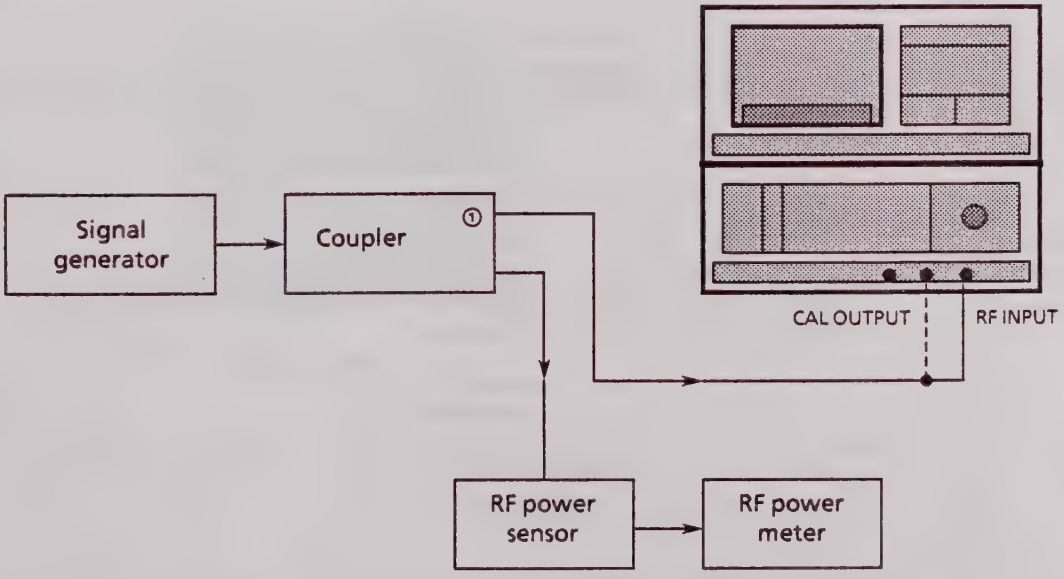

4.4.24 Testing the Reference Input/Output

Measuring equipment:

Signal generator
Spectrum analyzer

Test procedure:

- Determination of reference output level using spectrum analyzer.

- Switch to external reference in menu SET UP. Even with a frequency error of $\pm 1 \times 10^{-6}$, an external signal should produce synchronization of the internal reference oscillator.

4.4.25 Testing the Internal Frequency Counter

Measuring equipment:

Signal generator (synchronizable with external 10-MHz reference source)
Comb-line generator 100 MHz to 5 GHz

Test procedure:

The frequency is determined using the function FREQ.COUNT at a frequency of 5000 MHz and with various spans and frequency resolutions. The signal to be measured must have an S/N ratio of at least 20 dB.

Permissible frequency deviation:

(Ref. accuracy) ± counter resolution ± 10 Hz.

4.4.26 Testing all Outputs and Inputs

All other outputs and inputs are tested according to the data sheet and Section 2 of the manual.

Test setup for 4.4.25:

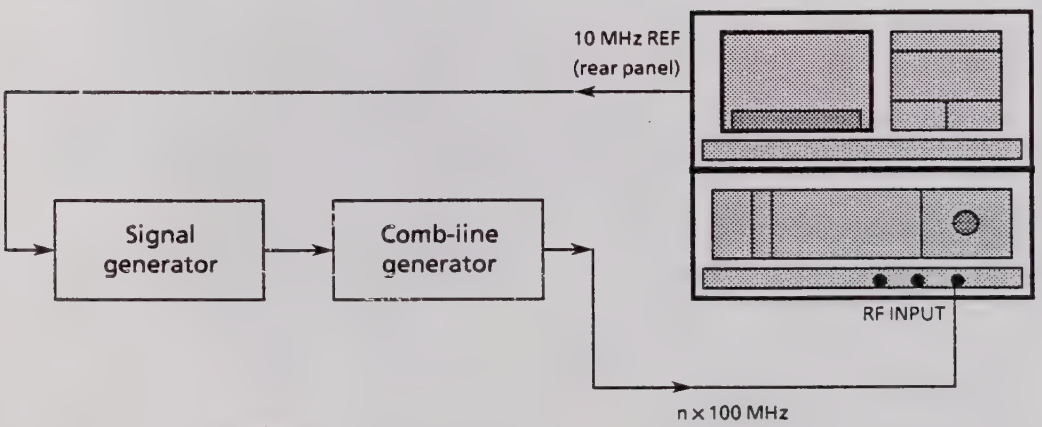

4.5 Required Measuring Instruments and Accessories

a) For 4.3: adjusting the complete instrument

Item	Equipment	Required specifications	R&S instrument Order No.	Use described in Section
1	Power meter	Level measuring accuracy <0.1 dBm at -20 dBm	NRV 828.2511.02	4.3.1 4.4.7 4.4.9 4.4.10 4.4.20
2	Precision power sensor		NRV-Z2 828.3218.02	
3	Frequency standard	Accuracy $<10^{-9}$	XSC 299.4011.02	4.3.2
4	Frequency counter or frequency error multiplier	Resolution $<10^{-8}$	—	4.3.2

b) For 4.4: testing the complete instrument

Item	Equipment	Required specifications	R&S instrument Order No.	Use described in Section
5	Digital voltmeter		UDS5 349.1510.02	4.4.1
6	Signal generator	100 kHz to 2.16 GHz	SMGU 819.0010.52	4.4.5 4.4.6 4.4.7 4.4.23 4.4.24 4.4.25
7	Generators	100 Hz to 5 GHz	SWM 814.7016.05 AFGU 377.5000.02	4.4.9 4.4.17 4.4.19 4.4.20 4.4.21 4.4.22
8	Precision attenuation set Fixed attenuation pads	Calibration table for correction	DPVP 214.8017.52	4.4.5 4.4.6 4.4.7 4.4.9 4.4.10
9	Power amplifier	1 MHz to 1.8 GHz, 50 Ω, + 30 dBm	—	4.4.7 4.4.9 4.4.10 4.4.19
10	Power divider	100 Hz to 5 GHz, 50 Ω, >25 dB decoupling, balanced output <0.1 dB	—	4.4.7 4.4.9 4.4.10

b) For 4.4: testing the complete instrument

Item	Equipment	Required specifications	R&S instrument Order No.	Use described in Section
11	Crystal oscillator	100 MHz, ext. sync., 50 Ω, + 13 dBm	—	4.4.14 4.4.15
12	Comb-line generator	Input: 100 MHz, output: n x 100 MHz at 5 GHz	—	4.4.14 4.4.15 4.4.25
13	Deviation meter	Spurious FM < 1 kHz	FAM 334.2015.54	4.4.15
14	Storage oscilloscope	20 ms to 2000 s Error < 1 % Ext. trigger facility	—	4.4.18
15	Lowpass (2 x)	> 70 dB selection on harmonics	—	4.4.19
16	Spectrum analyzer	10 MHz to 11 GHz, 50 Ω, sensitivity < −110 dBm	—	4.4.24
17	VSWR bridge	Directivity > 20 dB, 50 Ω	—	4.4.22
18	Harmonic distortion meter	10 Hz to 20 kHz Harmonic distortion < 1%	UPA 372.6014.02	4.4.23

4.6 Troubleshooting on Complete Instrument

- Troubleshooting on the complete instrument is limited to determining which of the two units is faulty. Once the faulty unit has been established, the fault is located according to Section 5.3 and then eliminated.

- The complex circuitry of the instrument means that servicing and repair can only be carried out by trained personnel. Care must be taken bearing in mind the AC supply voltages and the high-voltages in the monitor unit.

- Original parts from the manufacturer should be used as replacements. The manufacturer's service centre should be contacted before replacing modules.

- Preconditions for troubleshooting:

  The applicable AC supply voltage must be set on both units.

  The two interconnecting cables must be fitted correctly at the rear of the units.

  Both AC power switches at the rear must be switched on.

  The ON/OFF switch on the front panel must be in the OFF position.

4.6.1 Switch-on Procedure

Connect the AC supply cables to both units (ensure correct AC supply voltage) and fit the connection cables W1 and W2. Switch on the two AC power switches at the rear.

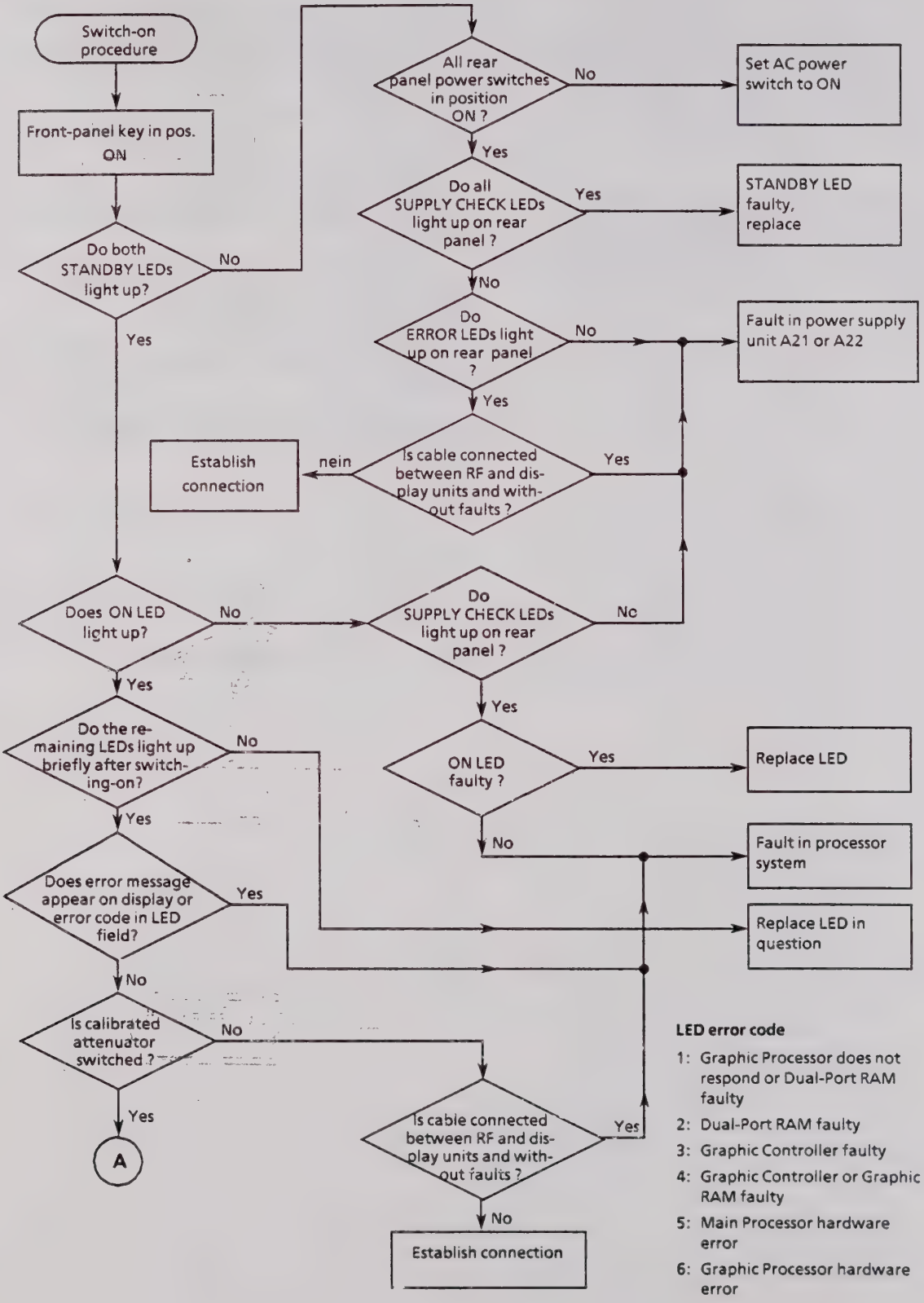

LED error code

1: Graphic Processor does not respond or Dual-Port RAM faulty
2: Dual-Port RAM faulty
3: Graphic Controller faulty
4: Graphic Controller or Graphic RAM faulty
5: Main Processor hardware error
6: Graphic Processor hardware error

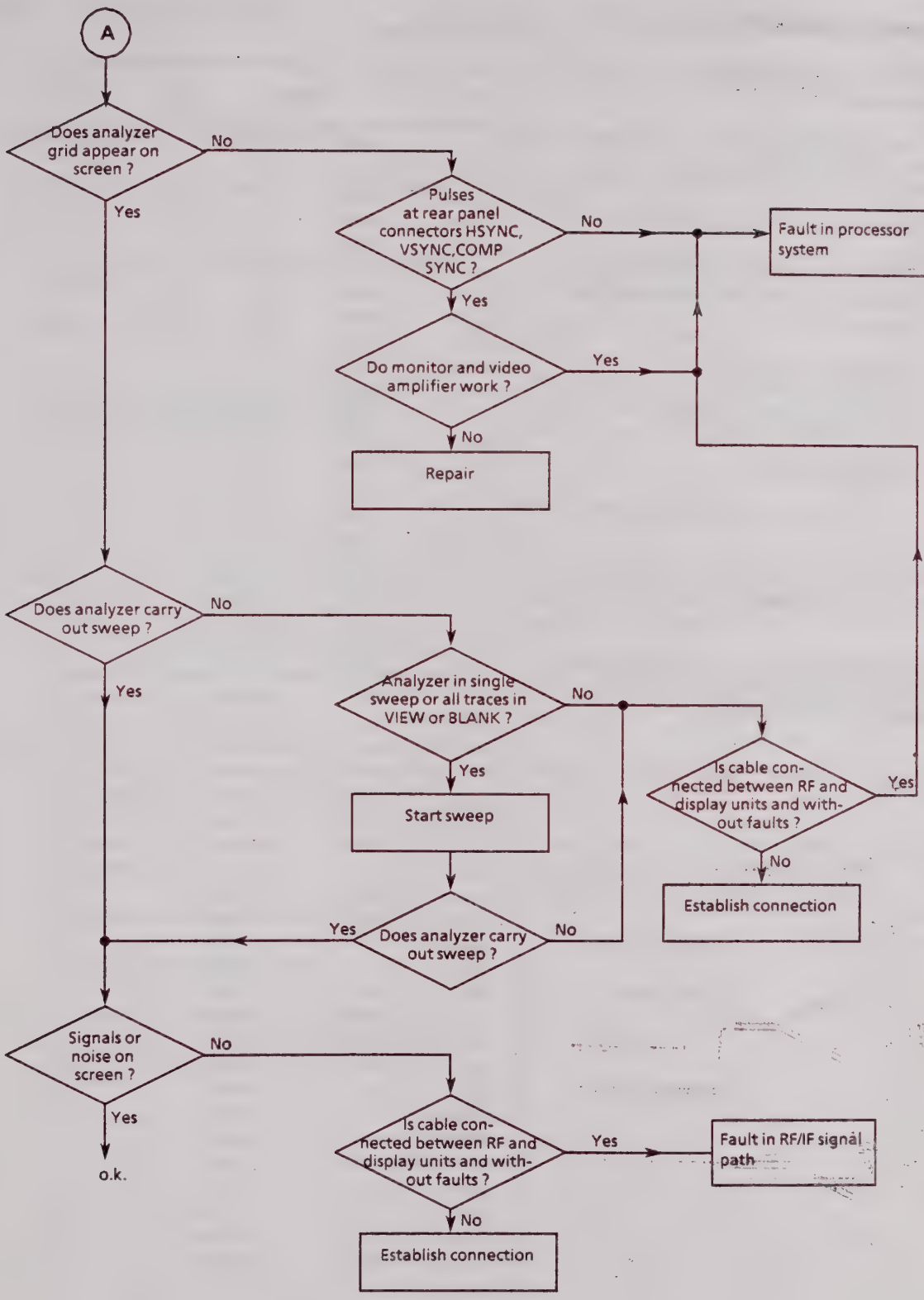
A
Does analyzer grid appear on screen ?
No
Yes
Pulses at rear panel connectors HSYNC, VSYNC,COMP SYNC ?
No
Fault in processor system
Yes
Do monitor and video amplifier work ?
Yes
No
Repair
Does analyzer carry out sweep ?
No
Yes
Analyzer in single sweep or all traces in VIEW or BLANK ?
No
Yes
Start sweep
Is cable connected between RF and display units and without faults ?
Yes
No
Establish connection
Yes
Does analyzer carry out sweep ?
No
Signals or noise on screen ?
No
Yes
o.k.
Is cable connected between RF and display units and without faults ?
Yes
Fault in RF/IF signal path
No
Establish connection

4.6.1.1 List of Service Routines

The service functions are called by entering the following sequence:

Special Function ⇒ Service ⇒ $N_1.N_2N_3.N_4N_5.N_{DATA}$

The parameters have the following meaning:

$N_1 = 0$: Total instrument function (RF unit and display unit are tested simultaneously)

$N_1 = 1$: Function test in RF unit

$N_1 = 2$: Function test in display unit

N_2N_3: Module A N_2 N_3

N_4N_5: Max. 99 service functions per module

N_{DATA}: Number for the setting (not always required)

The service functions relating to the instrument modules are explained in detail in the relevant documentation for these modules.

Service functions

Entry	Function		
0.01.00	Normal		
0.01.01	Display	0 V	
0.01.02	Display	+5 V	
0.01.03	Display	+5 V *	
0.01.04	Display	+12 V	
0.01.05	Display	+85 V	
0.01.06	Display	STB	
0.01.07	Display	STG	
0.01.08	Display	STR	
0.01.09	Display	STLSGI	
0.01.10	Display	STLSGO	
0.01.11	Display	CISPR	
0.01.12	Display	STLIN	
0.01.13	Display	STLOG	
0.01.14	Display	STL1F1	
0.01.15	Display	STL2F1	
0.01.16	Display	AFUNIT	
0.01.17	Display	ST -15 V	
0.01.18	Display	ST -5 V	
0.01.19	Display	ST +5 V	
0.01.20	Display	ST +15 V	
0.01.21	Display	VIDEO	
0.01.30	RF	STLIFO	
0.01.31	RF	STLIFI	
0.01.32	RF	STYPT	
0.01.33	RF	STFS01	
0.01.34	RF	STxxxx	free
0.01.35	RF	STxxxx	free
0.01.36	RF	STxxxx	free
0.01.37	RF	STxxxx	free
0.01.38	RF	STTEMP	
0.01.39	RF	STxxxx	free
0.01.40	RF	STFSWO	
0.01.41	RF	STLYSY	
0.01.42	RF	STFS02	
0.01.43	RF	STFYSY	
0.01.44	RF	STFSTO	
0.01.45	RF	STL2LO	
0.01.46	RF	STFMO	
0.01.47	RF	STF2LO	
0.01.48	RF	STFNO	
0.01.49	RF	STLTG2	
0.01.50	RF	ST10M	
0.01.51	RF	STFTG1	
0.01.52	RF	ST100M	
0.01.53	RF	STFTG2	
0.01.54	RF	+5 V	
0.01.55	RF	+5 V *	
0.01.56	RF	+15 V	
0.01.57	RF	+20 V	
0.01.58	RF	+28 V	
0.01.59	RF	-15 V	

4.6.2 Frequency Error

Type of error:

A frequency error is strongly suspected.

a) An error message is output (e.g. in the self-test):

This indicates that a module is not operating correctly.

b) **No** error message is output:

This type of error is rare and only occurs if the monitoring circuit functions incorrectly in addition to a faulty circuit function.

Troubleshooting in case b):

- Apply a signal of 21.4 MHz/-14 dBm to the display unit. This level must result in full-scale value at all bandwidths and with setting NORMAl, ref. level -10 dBm. The module "IF filter 2" should be examined if a significant difference in levels is determined between the bandwidths > 1kHz and < 1 kHz.
- Check the following signals of the RF unit using a frequency counter and determine the level accuracy using a level meter:

  External reference frequency 10 MHz (rear panel)

  Internal reference frequency 100 MHz

  2nd LO frequency 5200 MHz.
- If the error is in the frequency processing of the 1st oscillator, proceed as in Sections 5.1 and 5.4 of the service manual of the RF unit.

4.6.3 Amplitude Error

Type of error:

An amplitude error is strongly suspected.

a) An error message is output (e.g. in the self-test):

This indicates that a module is not operating correctly.

b) **No** error message is output:

This type of error is rare and only occurs if the monitoring circuit functions incorrectly in addition to a faulty circuit function.

Troubleshooting in case b):

- Apply a signal of 21.4 MHz/-14 dBm to the display unit. This level must result in full-scale value at all bandwidths and with setting NORMAL, ref. level -10 dBm.
- Check the minimum level value according to the set level range (e.g. -64 dBm with the 50-dB range).
- Check at resolution bandwidths > 1 kHz and < 1 kHz.
- If the fault is in the RF unit, check the following units according to Sections 5.1 and 5.4 in the service manual of the RF unit:

  RF input divider

  Preamplifier 3rd IF

  RF module

  3rd converter.

ROHDE&SCHWARZ

Measuring Instruments
and Systems Division

MICROFILMED

Service Manual

SPECTRUM ANALYZER

RF UNIT

FSB

848.0020.52

VOLUME 2

Service manual consists of 3 volumes

Printed in the Federal
Republic of Germany

Contents of FSB Manual

Operating Manual

1 Specifications

2 Operation

Service Manual

Volume 1

3 Performance Test

4 Service Instructions for Complete Instrument

Volume 2

5 Service Instructions RF Unit

6 Service Instructions for Modules of RF Unit

	Order No.	Index
Attenuator	849.3517.00	1
RF Module	848.9511.02	2
Preamplifier 3rd IF	848.8009.02	3
YIG Synchronization	849.2010.02	4
YIG Pretune + YIG Oscillator	848.6506.02	5
2nd LO/3rd Converter	848.3507.02	6
M Synthesizer	807.0010.02	7

Volume 3

6 Service Instructions for Modules of RF Unit

N Synthesizer	849.1014.02	1
Summing Loop	807.4015.02	2
Sweep Synthesizer	807.5011.02	3
Reference 2	807.3019.02	4
Reference 1	848.5000.02	5
Frequency Processor	810.3400.02	6
Interface	807.7014.02	7
Keyboard	806.4811.02	8
Power Supply, A21	808.4819.02	9
Power Supply, A22	808.4519.02	10

Contents

		Page
5	**Service Instructions RF Unit**	5.1
5.1	**Function Description**	5.1
5.1.1	General Function	5.1
5.1.2	Detailed Function of the RF/IF Path	5.2
5.1.3	Detailed Function of the Frequency Processor	5.2
5.1.3.1	1st Local Oscillator	5.5
5.1.3.2	Reference Frequency Generation	5.13
5.1.3.3	N Synthesizer, M Synthesizer	5.15
5.1.3.4	Interpolation Synthesizer	5.16
5.1.3.5	2nd Local Oscillator	5.17
5.1.3.6	3rd Local Oscillator	5.17
5.2	**Mechanical Design**	5.18
5.2.1	Opening the Instrument	5.18
5.2.2	Removing the Front Panel	5.18
5.2.3	Dismounting the Front Panel	5.18
5.2.4	Removing the Attenuator Module	5.18
5.2.5	Removing the Reference 1 Module	5.18
5.2.6	Removing the RF Module	5.19
5.2.7	Removing the YIG Oscillator Module	5.19
5.2.8	Removing the YIG Oscillator from the Screen Housing	5.19
5.2.9	Removing the Power Supply Assembly	5.19
5.3	**Testing and Adjustment**	5.20
5.3.1	List of Modules	5.20
5.3.2	Summary of Important Controls	5.21
5.3.3	Assembly and Module Tests	5.22
5.3.3.1	Power Supply Assembly (A2)	5.23
5.3.3.1.1	Checking the Voltages from Power Supply (A21)	5.23
5.3.3.1.2	Checking the Voltages from Power Supply (A22)	5.23
5.3.3.2	Reference Assembly (A5)	5.23
5.3.3.2.1	Reference 1 (A51)	5.23
5.3.3.2.2	Reference 2 (A52)	5.23
5.3.3.3	Synthesizer Assembly (A4)	5.24
5.3.3.3.1	YIG Oscillator (A41)	5.24
5.3.3.3.2	YIG Pretune (A43)	5.24
5.3.3.3.3	YIG Synchronization (A42)	5.24
5.3.3.3.4	N Synthesizer (A48)	5.24
5.3.3.3.5	M Synthesizer (A47)	5.24
5.3.3.3.6	Summing Loop (A46)	5.24
5.3.3.3.7	Sweep Synthesizer (A45)	5.24
5.3.3.3.8	2nd LO/3rd Converter (A44)	5.24
5.3.3.4	RF/IF Assembly (A3)	5.25
5.3.3.4.1	Attenuator (A31)	5.25
5.3.3.4.2	RF Module (A32)	5.25
5.3.3.4.3	Preamplifier 3rd IF (A34)	5.25

5.3.3.5	Frequency Processor Assembly (A6)	5.26
5.3.3.5.1	Frequency Processor (A61)	5.26
5.3.3.5.2	Interface (A63)	5.26
5.3.3.6	Basic Assembly (A1)	5.26
5.3.3.6.1	Front Panel (A11)	5.26
5.3.3.6.2	Motherboard (A12)	5.26
5.3.3.6.3	Rear Panel (A13)	5.26
5.3.4	Final Check	5.26
5.3.4.1	Final Adjustment	5.27
5.3.5	Summary of Adjustments on RF Unit Required When Replacing a Module	5.27
5.4	**Troubleshooting**	5.28
5.4.1	Self-test	5.29
5.4.2	List of Service Routines	5.29
5.5	**Required Measuring Equipment and Accessories**	5.31

List of mechanical parts
Figs. to list of mechanical parts

Parts lists
Circuit diagrams
Component location plans

6 Service Instructions for Modules of RF Unit

Index

Attenuator 1
RF Module 2
Preamplifier 3rd IF 3
YIG Synchronization 4
YIG Pretune + YIG Oscillator 5
2nd LO/3rd Converter 6
M Synthesizer 7

5 Service Instructions RF Unit

(See circuit diagram 848.0550 S)

5.1 Function Description

5.1.1 General Function

The RF unit converts all signals in the frequency range from 100 Hz to 5000 MHz in a level range from -145 dBm to +30 dBm into a frequency of 21.4 MHz irrespective of their frequency according to the heterodyne principle. This (IF) signal can then be processed further in the display unit.

The RF unit cannot be operated on its own. It only functions when connected to the associated display unit.

The input of the RF unit contains an RF attenuator prior to the RF module. Each input signal is converted to an IF frequency of 21.4 MHz after passing through three mixer stages. The oscillator frequencies used for the conversion are derived from a common crystal frequency. The signal is applied to the display unit via a variable amplifier at a frequency of 21.4 MHz.

The connection from the RF unit to the display unit is made from the rear panel using two screwed-on cables ("ANALYZER BUS"). The instrument has its own power supply which is activated together with the power supply of the display unit.

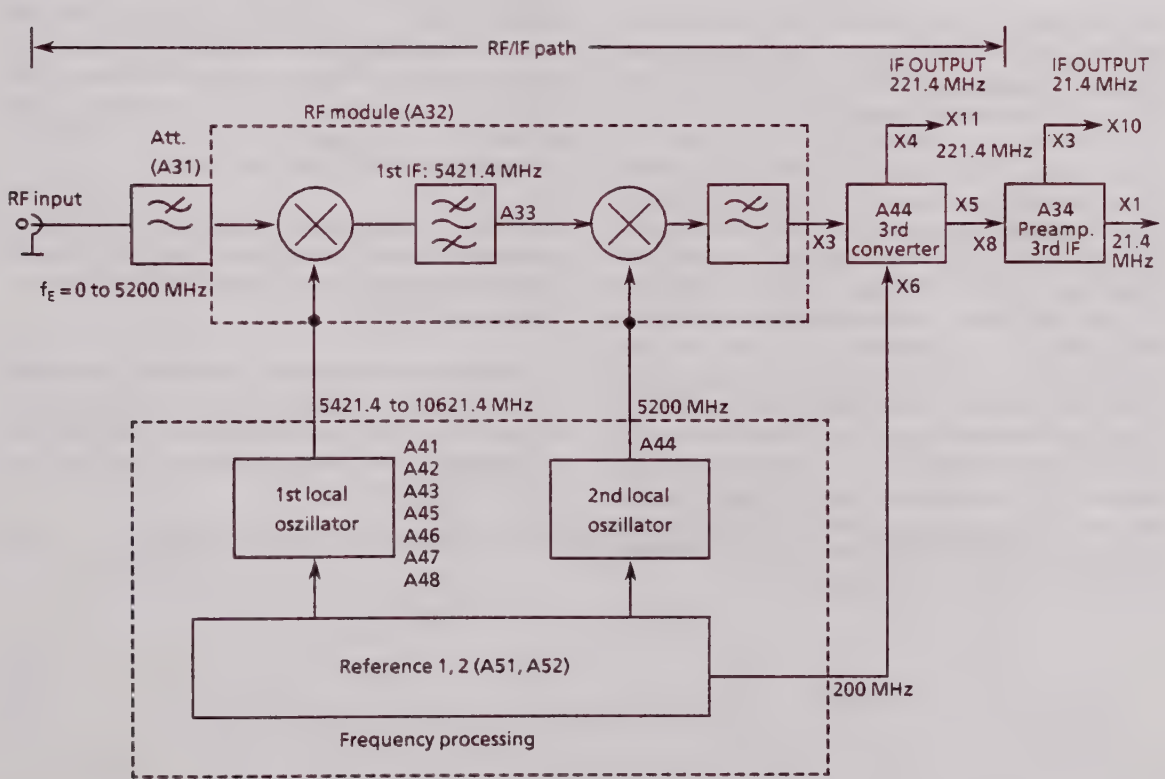

Fig. 5-1 Basic Block Diagram of RF Unit

5.1.2 Detailed Function of the RF/IF Path

The level of the signal (mixture) applied to the input socket RF INPUT can be varied in steps of 5 dB in module A31 (attenuator) in NORMAL or LOW NOISE mode. The variation is in steps of 1 dB in LOW DISTORTION mode. The signal at the output of A31 is as follows for the full-scale deflection or reference value in modes:

LOW NOISE	–20 dBm
NORMAL	–30 dBm
LOW DISTORTION	–40 dBm.

An internal calibration signal with a frequency of 100 MHz is applied with a level of -20 dBm to module A31 (attenuator). The instrument can then be internally calibrated automatically without cable connections having to be made to the front panel.

The signal is up-converted to an intermediate frequency of 5421.4 MHz in module A32 (RF module) in the first mixer stage. The oscillator signal required for the conversion is provided by a synthesizer assembly. The frequency range extends from 5421.4 MHz to 10621.4 MHz. Processing of this signal is described in more detail in Section 5.1.3.

The bandwidth of the first intermediate frequency is determined by a dielectric bandpass as well as the bandpass A33. Bandpass A33 is a filter with five iris-coupled resonators which has a 3-dB bandwidth of approx. 40 MHz. The first intermediate frequency is converted in a second mixer stage with a fixed oscillator of frequency 5200 MHz (A44) into the second intermediate frequency of 221.4 MHz. Module A44 (3rd converter) converts the frequency into the 3rd IF of 21.4 MHz by means of the 200-MHz signal from the reference 2 module. In module A34 (preamplifier 3rd IF), the IF signal is amplified by 10, 20 or 30 dB depending on the level on the 1st mixer for full-scale value. The frequency response of the signal path is also compensated in this module by fine adjustment of the gain depending on the frequency of the 1st oscillator. This enables an extremely low frequency dependence of the conversion to be achieved.

The IF signal is applied further to the display unit via socket X132 on the rear panel A13. This rear panel contains a connector which is used as an input for an external reference signal. In normal mode, i.e. with an internal reference frequency, this connector provides a spectrally pure and stable signal with a frequency of 10 MHz as the output.

Also, for both the 2nd and 3rd IF (221.4 MHz and 21.4 MHz) a broadband IF output each is available on the rear panel; the bandwidth corresponds to that of the filter at the 1st intermediate frequency. An analog sawtooth output is additionally available whose amplitude is directly proportional to the completed portion of the span.

5.1.3 Detailed Function of the Frequency Processor

The block diagram is shown in Fig. 5-2.

An oscillator signal in the frequency range from 5421.4 MHz to 10621.4 MHz is required for converting the input frequency range of 0 to 5.2 GHz to a first IF of 5421.4 MHz. This oscillator signal must be continuously variable.

The first IF of 5421.4 MHz is converted into a second IF of 221.4 Mhz. The required 5200-MHz signal is obtained by multiplying of a 200-MHz reference signal. Block diagram 5-2 shows the interaction of the various modules which determine the frequency of the first oscillator (A41, A42, A43, A45, A46, A47, A48).

The reference frequencies required for this purpose are derived in modules A51 and A52 from a temperature-controlled crystal oscillator with a frequency of 10 MHz.

All synthesizer modules are controlled by module A61 (frequency processor). This also generates a number of pulses corresponding to the number of frequency steps and the sweep time for the frequency sweep.

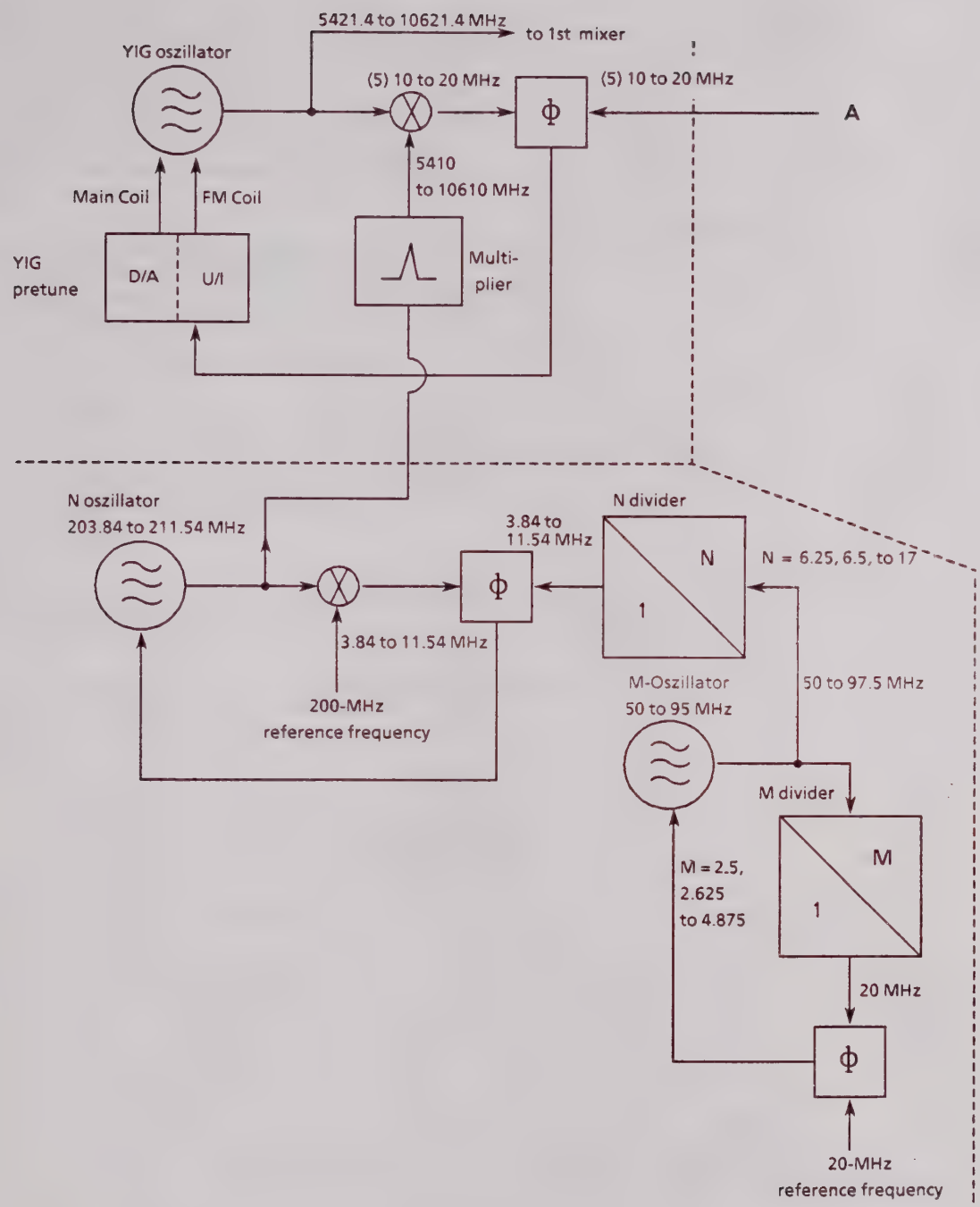

Fig. 5-2 Interaction of the frequency-determining modules of the 1st local oscillator (part 1)

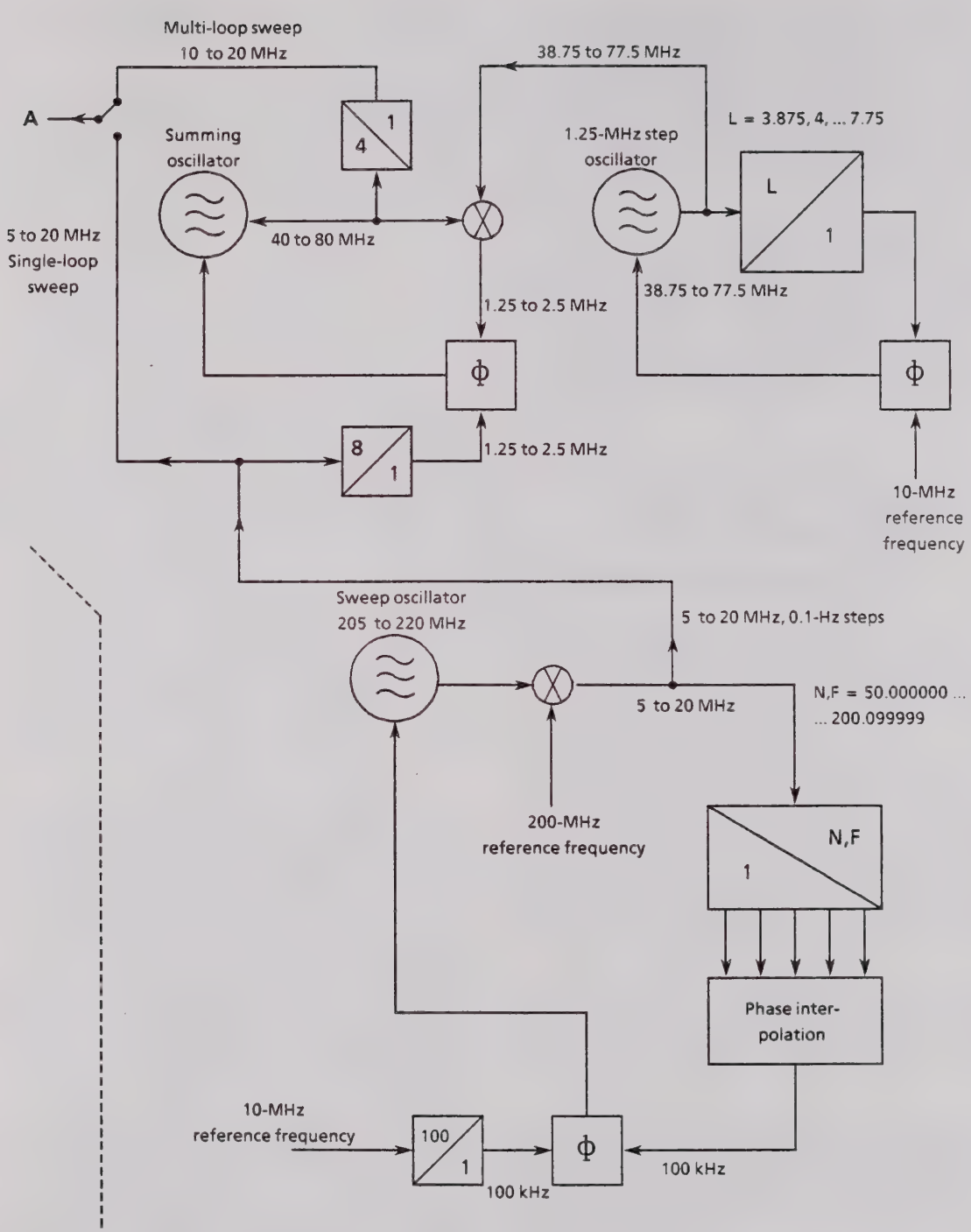

Fig. 5-2 Interaction of the frequency-determining modules of the 1st local oscillator (part 2)

5.1.3.1 1st Local Oscillator

The 1st local oscillator is a YIG oscillator which can be tuned from 5.4214 GHz to 10.6214 GHz, corresponding to an input frequency range from 0 to 5.2 GHz. In the 1st mixer, the input frequency of the instrument is converted to the 1st IF of 5.4214 GHz. A differentiation is made between two basic modes depending on the set span:

- For spans ≤5 MHz, synchronous frequency tuning; the YIG oscillator is linked to a crystal-controlled synthesizer throughout the complete sweep by means of a PLL circuit.

- For spans > 5 MHz, the YIG oscillator is only synchronized at the start and stop frequencies. The actual frequency tuning is then made unsynchronized via D/A converters (see module description "YIG Pretune, LOCK & ROLL Mode").

The various operating modes are shown in the flowchart (Fig. 5-3).

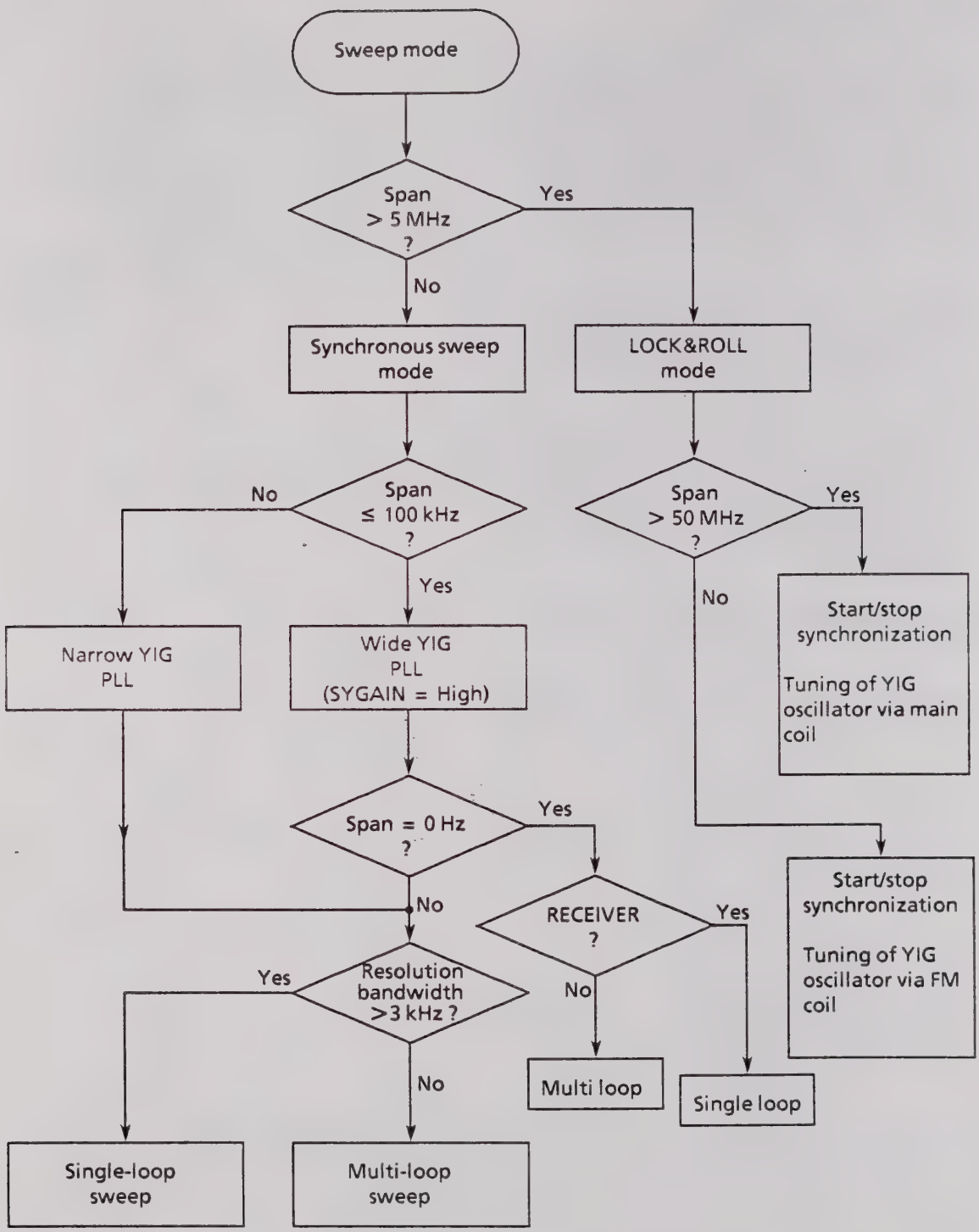

Fig. 5-3 YIG frequency tuning as a function of span and resolution bandwidth

Main synchronization loop

For spans ≤5 MHz, the YIG oscillator of the instrument is linked to a crystal-controlled synthesizer in a PLL during the complete sweep in order to achieve the highest frequency accuracy and the lowest phase noise.

The synchronization principle is shown in Fig. 5-4.

The YIG oscillator is roughly pretuned to the nominal frequency by the YIG pretune module via the main coil. Using a comb spectrum with an adjustable basic frequency (from the N synthesizer), it is possible to convert the YIG oscillator to an intermediate frequency of 5 to 20 MHz. The N synthesizer frequency can be adjusted such that spectral lines are available from 5410 MHz to 10610 MHz spaced at 10 MHz in order to down-convert any YIG oscillator frequency of 5421.4 to 10621.4 MHz to the frequency range from 5 to 20 MHz.

The IF frequency is compared in the frequency/phase detector with the interpolation synthesizer (sweep synthesizer and summing loop modules) which can be tuned quasi-continuously from (5) 10 to 20 MHz, and the YIG oscillator is thus controlled accordingly. This ensures that a continuous sweep of ***at least*** 5 MHz is possible at any start frequency of the 1st LO.

In order to minimize the phase noise depending on the offset from the carrier frequency and the screen display, the gain of the summing control loop is switched depending on the set span.

Span ≤100 kHz: broad control loop; optimum phase noise close to carrier ($f_m \leq 50$ kHz)

Span >100 kHz: narrow control loop; optimum phase noise further away from carrier ($f_m >$ ca. 100 kHz).

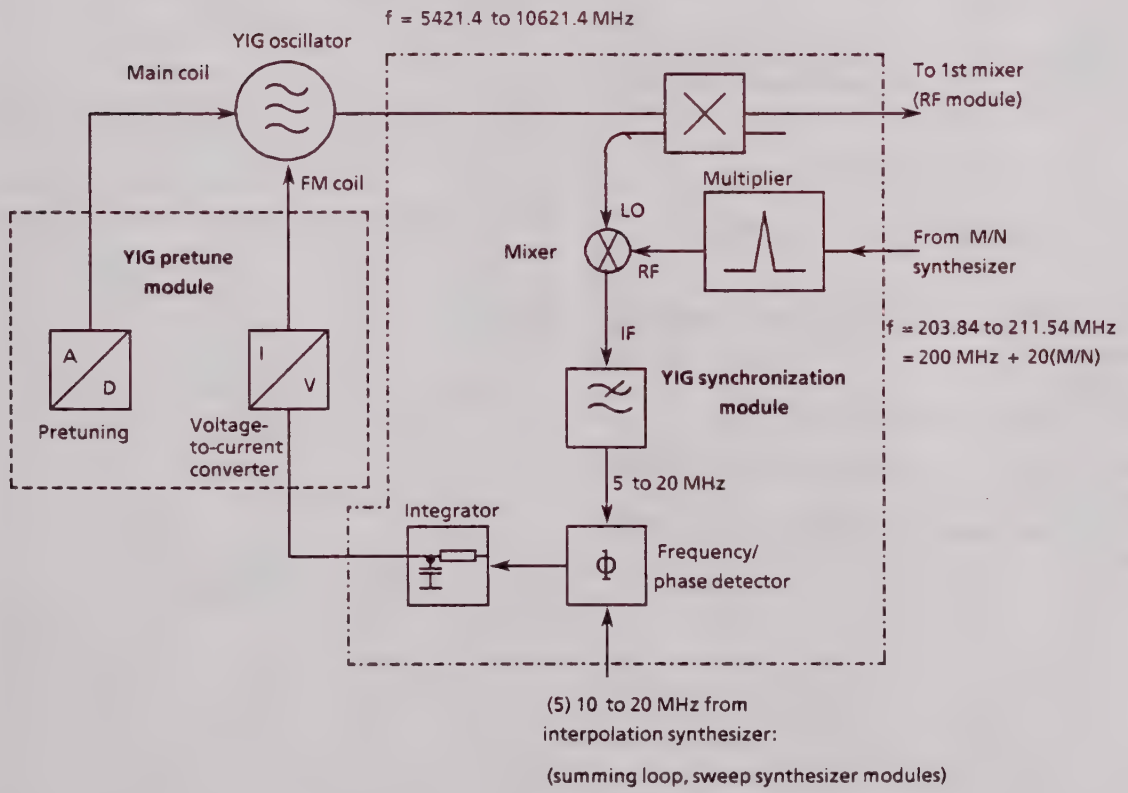

Fig. 5-4 Summing synchronization loop of the YIG oscillator (1st local)

Synthesizer frequencies as function of the input frequency F_E

(Centre frequency at span = 0 Hz or start frequency)

The frequency of the spectral line F_{SP} used is calculated as follows:

$$F_{SP} = F_E + 5421.4\ MHz - 10\ MHz$$

Example: $F_E = 100\ MHz$

F_{SP}' = 100 MHz + 5421.4 MHz – 10 MHz = 5511.4 *MHz*
(rounded off to 10 MHz)

results in: $F_{SP} = 5510\ MHz$

The spectral line is generated by multiplying (factor N') the N synthesizer frequency F_N.

$$F_{SP} = N' \cdot F_N = N' \cdot (200 + 20 \cdot \frac{M}{N})$$

The divider factors M, N and the frequencies of the M and N synthesizers can be obtained from Table 5-1.

The frequency of the interpolation synthesizer (output frequency of summation synthesizer) F_{Int} is calculated as follows:

$$F_{Int} = F_E + 5421.4\ MHz - F_{SP}$$

(in the above example: $F_{Int} = 11.4\ MHz$).

• The following applies in the case of the single-loop sweep:

$F_{Int.} = F_{\Sigma Synth.} = F_{Sweep\ synth.}$

where $F_{\Sigma Synth.}$ = frequency of summation synthesizer
and $F_{Sweep\ synth.}$ = frequency of sweep synthesizer

• The following applies in the case of the multi-loop sweep:

$$F_{Int.} = F_{\Sigma Synth.} = \frac{F_{\Sigma Osc.}}{4}$$

where

$$F_{\Sigma Osc.} = F_{Step\ osc.} + \frac{F_{Sweep\ synth.}}{8}$$

The step oscillator frequency is always 1.25 MHz to 2.5 MHz below the summation oscillation frequency.

$$F_{Step\ osc.} = \left[Int\left(\frac{F_{\Sigma Osc.}}{1.25} \right) - 1 \right] \times 1.25\ MHz$$

Expressed differently, the sweep frequency is calculated as follows:

$F_{Sweep\ synth.} = (F_{\Sigma Osc.} - F_{Step\ osc.}) \cdot 8$

$$= \left[4 \cdot F_{Int.} - \left(Int\left(\frac{4 \cdot F_{Int.}}{1.25} - 1 \right) \right) \times 1.25 \right] \times 8$$

The following then applies in the above example:

$F_{Sweep\ synth.} =$

$$= \left\{ 4 \times 11.4 - \left[Int\left(\frac{4 \times 11.4}{1.25} - 1 \right) \right] \times 1.25 \right\} \times 8$$

$$= \left(45.6 - 35 \times 1.25 \right) \times 8$$

$$= \left(45.6 - 43.75 \right) \times 8 = 14.8\ MHz$$

Table 5-1 Divider factors, M/N synthesizer frequencies

F_E	N'	M	N	F_M	F_N	N'*F_N
0	26	2.625	6.5	52.5	208.0769	5410
10	26	2.75	6.5	55	208.4615	5420
20	26	2.875	6.5	57.5	208.8462	5430
30	26	3	6.5	60	209.2308	5440
40	26	3.125	6.5	62.5	209.6154	5450
50	26	3.25	6.5	65	210	5460
60	26	3.375	6.5	67.5	210.3846	5470
70	26	3.5	6.5	70	210.7692	5480
80	26	3.625	6.5	72.5	211.1538	5490
90	26	3.75	6.5	75	211.5385	5500
100	27	2.75	13.5	55	204.0741	5510
110	27	3	13.5	60	204.4444	5520
120	27	3.25	13.5	65	204.8148	5530
130	27	3.5	13.5	70	205.1852	5540
140	27	3.75	13.5	75	205.5556	5550
150	27	4	13.5	80	205.9259	5560
160	27	4.25	13.5	85	206.2963	5570
170	27	4.5	13.5	90	206.6667	5580
180	27	4.75	13.5	95	207.037	5590
190	27	2.5	6.75	50	207.4074	5600
200	27	2.625	6.75	52.5	207.7778	5610
210	27	2.75	6.75	55	208.1481	5620
220	27	2.875	6.75	57.5	208.5185	5630
230	27	3	6.75	60	208.8889	5640
240	27	3.125	6.75	62.5	209.2593	5650
250	27	3.25	6.75	65	209.6296	5660
260	27	3.375	6.75	67.5	210	5670
270	27	3.5	6.75	70	210.3704	5680
280	27	3.625	6.75	72.5	210.7407	5690
290	27	3.75	6.75	75	211.1111	5700
300	27	3.875	6.75	77.5	211.4815	5710
310	28	3	14	60	204.2857	5720
320	28	3.25	14	65	204.6429	5730
330	28	3.5	14	70	205	5740
340	28	3.75	14	75	205.3571	5750
350	28	4	14	80	205.7143	5760
360	28	4.25	14	85	206.0714	5770
370	28	4.5	14	90	206.4286	5780
380	28	4.75	14	95	206.7857	5790
390	28	2.5	7	50	207.1429	5800
400	28	2.625	7	52.5	207.5	5810
410	28	2.75	7	55	207.8571	5820
420	28	2.875	7	57.5	208.2143	5830
430	28	3	7	60	208.5714	5840
440	28	3.125	7	62.5	208.9286	5850
450	28	3.25	7	65	209.2857	5860
460	28	3.375	7	67.5	209.6429	5870
470	28	3.5	7	70	210	5880
480	28	3.625	7	72.5	210.3571	5890
490	28	3.75	7	75	210.7143	5900
500	28	3.875	7	77.5	211.0714	5910
510	29	3	14.5	60	204.1379	5920
520	29	3.25	14.5	65	204.4828	5930

F_E	N'	M	N	F_M	F_N	N'*F_N
530	29	3.5	14.5	70	204.8276	5940
540	29	3.75	14.5	75	205.1724	5950
550	29	4	14.5	80	205.5172	5960
560	29	4.25	14.5	85	205.8621	5970
570	29	4.5	14.5	90	206.2069	5980
580	29	4.75	14.5	95	206.5517	5990
590	29	2.5	7.25	50	206.8965	6000
600	29	2.625	7.25	52.5	207.2414	6010
610	29	2.75	7.25	55	207.5862	6020
620	29	2.875	7.25	57.5	207.931	6030
630	29	3	7.25	60	208.2759	6040
640	29	3.125	7.25	62.5	208.6207	6050
650	29	3.25	7.25	65	208.9655	6060
660	29	3.375	7.25	67.5	209.3103	6070
670	29	3.5	7.25	70	209.6552	6080
680	29	3.625	7.25	72.5	210	6090
690	29	3.75	7.25	75	210.3448	6100
700	29	3.875	7.25	77.5	210.6897	6110
710	30	3	15	60	204	6120
720	30	3.25	15	65	204.3333	6130
730	30	3.5	15	70	204.6667	6140
740	30	3.75	15	75	205	6150
750	30	4	15	80	205.3333	6160
760	30	4.25	15	85	205.6667	6170
770	30	4.5	15	90	206	6180
780	30	4.75	15	95	206.3333	6190
790	30	2.5	7.5	50	206.6667	6200
800	30	2.625	7.5	52.5	207	6210
810	30	2.75	7.5	55	207.3333	6220
820	30	2.875	7.5	57.5	207.6667	6230
830	30	3	7.5	60	208	6240
840	30	3.125	7.5	62.5	208.3333	6250
850	30	3.25	7.5	65	208.6667	6260
860	30	3.375	7.5	67.5	209	6270
870	30	3.5	7.5	70	209.3333	6280
880	30	3.625	7.5	72.5	209.6667	6290
890	30	3.75	7.5	75	210	6300
900	30	3.875	7.5	77.5	210.3333	6310
910	30	4	7.5	80	210.6667	6320
920	31	3.25	15.5	65	204.1935	6330
930	31	3.5	15.5	70	204.5161	6340
940	31	3.75	15.5	75	204.8387	6350
950	31	4	15.5	80	205.1613	6360
960	31	4.25	15.5	85	205.4839	6370
970	31	4.5	15.5	90	205.8065	6380
980	31	4.75	15.5	95	206.129	6390
990	31	2.5	7.75	50	206.4516	6400
1000	31	2.625	7.75	52.5	206.7742	6410
1010	31	2.75	7.75	55	207.0968	6420
1020	31	2.875	7.75	57.5	207.4194	6430
1030	31	3	7.75	60	207.7419	6440
1040	31	3.125	7.75	62.5	208.0645	6450
1050	31	3.25	7.75	65	208.3871	6460

F_E	$N'*F_N$	N'	N	F_N	M	F_M
1060	6470	31	7.75	208.7097	3.375	67.5
1070	6480	31	7.75	209.0323	3.5	70
1080	6490	31	7.75	209.3548	3.625	72.5
1090	6500	31	7.75	209.6774	3.75	75
1100	6510	31	7.75	210	3.875	77.5
1110	6520	31	7.75	210.3226	4	80
1120	6530	32	16	204.0625	3.25	65
1130	6540	32	16	204.375	3.5	70
1140	6550	32	16	204.6875	3.75	75
1150	6560	32	16	205	4	80
1160	6570	32	16	205.3125	4.25	85
1170	6580	32	16	205.625	4.5	90
1180	6590	32	16	205.9375	4.75	95
1190	6600	32	8	206.25	2.5	50
1200	6610	32	8	206.5625	2.625	52.5
1210	6620	32	8	206.875	2.75	55
1220	6630	32	8	207.1875	2.875	57.5
1230	6640	32	8	207.5	3	60
1240	6650	32	8	207.8125	3.125	62.5
1250	6660	32	8	208.125	3.25	65
1260	6670	32	8	208.4375	3.375	67.5
1270	6680	32	8	208.75	3.5	70
1280	6690	32	8	209.0625	3.625	72.5
1290	6700	32	8	209.375	3.75	75
1300	6710	32	8	209.6875	3.875	77.5
1310	6720	32	8	210	4	80
1320	6730	32	8	210.3125	4.125	82.5
1330	6740	33	16.5	204.2424	3.5	70
1340	6750	33	16.5	204.5455	3.75	75
1350	6760	33	16.5	204.8485	4	80
1360	6770	33	16.5	205.1515	4.25	85
1370	6780	33	16.5	205.4545	4.5	90
1380	6790	33	16.5	205.7576	4.75	95
1390	6800	33	8.25	206.0606	2.5	50
1400	6810	33	8.25	206.3636	2.625	52.5
1410	6820	33	8.25	206.6667	2.75	55
1420	6830	33	8.25	206.9697	2.875	57.5
1430	6840	33	8.25	207.2727	3	60
1440	6850	33	8.25	207.5758	3.125	62.5
1450	6860	33	8.25	207.8788	3.25	65
1460	6870	33	8.25	208.1818	3.375	67.5
1470	6880	33	8.25	208.4848	3.5	70
1480	6890	33	8.25	208.7879	3.625	72.5
1490	6900	33	8.25	209.0909	3.75	75
1500	6910	33	8.25	209.3939	3.875	77.5
1510	6920	33	8.25	209.697	4	80
1520	6930	33	8.25	210	4.125	82.5
1530	6940	34	17	204.1176	3.5	70
1540	6950	34	17	204.4118	3.75	75
1550	6960	34	17	204.7059	4	80
1560	6970	34	17	205	4.25	85
1570	6980	34	17	205.2941	4.5	90
1580	6990	34	17	205.5882	4.75	95
1590	7000	34	8.5	205.8824	2.5	50
1600	7010	34	8.5	206.1765	2.625	52.5
1610	7020	34	8.5	206.4706	2.75	55

F_E	$N'*F_N$	N'	N	F_N	M	F_M
1620	7030	34	8.5	206.7647	2.875	57.5
1630	7040	34	8.5	207.0588	3	60
1640	7050	34	8.5	207.3529	3.125	62.5
1650	7060	34	8.5	207.6471	3.25	65
1660	7070	34	8.5	207.9412	3.375	67.5
1670	7080	34	8.5	208.2353	3.5	70
1680	7090	34	8.5	208.5294	3.625	72.5
1690	7100	34	8.5	208.8235	3.75	75
1700	7110	34	8.5	209.1176	3.875	77.5
1710	7120	34	8.5	209.4118	4	80
1720	7130	34	8.5	209.7059	4.125	82.5
1730	7140	34	8.5	210	4.25	85
1740	7150	34	8.5	210.2941	4.375	87.5
1750	7160	34	8.5	210.5882	4.5	90
1760	7170	34	8.5	210.8824	4.625	92.5
1770	7180	34	8.5	211.1765	4.75	95
1780	7190	34	8.5	211.4706	4.875	97.5
1790	7200	35	8.75	205.7143	2.5	50
1800	7210	35	8.75	206	2.625	52.5
1810	7220	35	8.75	206.2857	2.75	55
1820	7230	35	8.75	206.5714	2.875	57 5
1830	7240	35	8.75	206.8571	3	60
1840	7250	35	8.75	207.1429	3.125	62.5
1850	7260	35	8.75	207.4286	3.25	65
1860	7270	35	8.75	207.7143	3.375	67.5
1870	7280	35	8.75	208	3.5	70
1880	7290	35	8.75	208.2857	3.625	72.5
1890	7300	35	8.75	208.5714	3.75	75
1900	7310	35	8.75	208.8571	3.875	77.5
1910	7320	35	8.75	209.1429	4	80
1920	7330	35	8.75	209.4286	4.125	82.5
1930	7340	35	8.75	209.7143	4.25	85
1940	7350	35	8.75	210	4.375	87.5
1950	7360	35	8.75	210.2857	4.5	90
1960	7370	35	8.75	210.5714	4.625	92.5
1970	7380	35	8.75	210.8571	4.75	95
1980	7390	35	8.75	211.1429	4.875	97.5
1990	7400	36	9	205.5556	2.5	50
2000	7410	36	9	205.8333	2.625	52.5
2010	7420	36	9	206.1111	2.75	55
2020	7430	36	9	206.3889	2.875	57.5
2030	7440	36	9	206.6667	3	60
2040	7450	36	9	206.9444	3.125	62.5
2050	7460	36	9	207.2222	3.25	65
2060	7470	36	9	207.5	3.375	67.5
2070	7480	36	9	207.7778	3.5	70
2080	7490	36	9	208.0556	3.625	72.5
2090	7500	36	9	208.3333	3.75	75
2100	7510	36	9	208.6111	3.875	77.5
2110	7520	36	9	208.8889	4	80
2120	7530	36	9	209.1667	4.125	82.5
2130	7540	36	9	209.4444	4.25	85
2140	7550	36	9	209.7222	4.375	87.5
2150	7560	36	9	210	4.5	90
2160	7570	36	9	210.2778	4.625	92.5
2170	7580	36	9	210.5556	4.75	95

F_E	$N'*F_N$	N'	N	F_N	M	F_M
2180	7590	36	9	210.8333	4.875	97.5
2190	7600	37	9.25	205.4054	2.5	50
2200	7610	37	9.25	205.6757	2.625	52.5
2210	7620	37	9.25	205.946	2.75	55
2220	7630	37	9.25	206.2162	2.875	57.5
2230	7640	37	9.25	206.4865	3	60
2240	7650	37	9.25	206.7568	3.125	62.5
2250	7660	37	9.25	207.027	3.25	65
2260	7670	37	9.25	207.2973	3.375	67.5
2270	7680	37	9.25	207.5676	3.5	70
2280	7690	37	9.25	207.8378	3.625	72.5
2290	7700	37	9.25	208.1081	3.75	75
2300	7710	37	9.25	208.3784	3.875	77.5
2310	7720	37	9.25	208.6487	4	80
2320	7730	37	9.25	208.9189	4.125	82.5
2330	7740	37	9.25	209.1892	4.25	85
2340	7750	37	9.25	209.4595	4.375	87.5
2350	7760	37	9.25	209.7297	4.5	90
2360	7770	37	9.25	210	4.625	92.5
2370	7780	37	9.25	210.2703	4.75	95
2380	7790	37	9.25	210.5405	4.875	97.5
2390	7800	38	9.5	205.2632	2.5	50
2400	7810	38	9.5	205.5263	2.625	52.5
2410	7820	38	9.5	205.7895	2.75	55
2420	7830	38	9.5	206.0526	2.875	57.5
2430	7840	38	9.5	206.3158	3	60
2440	7850	38	9.5	206.5789	3.125	62.5
2450	7860	38	9.5	206.8421	3.25	65
2460	7870	38	9.5	207.1053	3.375	67.5
2470	7880	38	9.5	207.3684	3.5	70
2480	7890	38	9.5	207.6316	3.625	72.5
2490	7900	38	9.5	207.8947	3.75	75
2500	7910	38	9.5	208.1579	3.875	77.5
2510	7920	38	9.5	208.4211	4	80
2520	7930	38	9.5	208.6842	4.125	82.5
2530	7940	38	9.5	208.9474	4.25	85
2540	7950	38	9.5	209.2105	4.375	87.5
2550	7960	38	9.5	209.4737	4.5	90
2560	7970	38	9.5	209.7368	4.625	92.5
2570	7980	38	9.5	210	4.75	95
2580	7990	38	9.5	210.2632	4.875	97.5
2590	8000	39	9.75	205.1282	2.5	50
2600	8010	39	9.75	205.3846	2.625	52.5
2610	8020	39	9.75	205.641	2.75	55
2620	8030	39	9.75	205.8974	2.875	57.5
2630	8040	39	9.75	206.1538	3	60
2640	8050	39	9.75	206.4103	3.125	62.5
2650	8060	39	9.75	206.6667	3.25	65
2660	8070	39	9.75	206.9231	3.375	67.5
2670	8080	39	9.75	207.1795	3.5	70
2680	8090	39	9.75	207.4359	3.625	72.5
2690	8100	39	9.75	207.6923	3.75	75
2700	8110	39	9.75	207.9487	3.875	77.5
2710	8120	39	9.75	208.2051	4	80
2720	8130	39	9.75	208.4615	4.125	82.5
2730	8140	39	9.75	208.718	4.25	85

F_E	$N'*F_N$	N'	N	F_N	M	F_M
2740	8150	39	9.75	208.9744	4.375	87.5
2750	8160	39	9.75	209.2308	4.5	90
2760	8170	39	9.75	209.4872	4.625	92.5
2770	8180	39	9.75	209.7436	4.75	95
2780	8190	39	9.75	210	4.875	97.5
2790	8200	40	10	205	2.5	50
2800	8210	40	10	205.25	2.625	52.5
2810	8220	40	10	205.5	2.75	55
2820	8230	40	10	205.75	2.875	57.5
2830	8240	40	10	206	3	60
2840	8250	40	10	206.25	3.125	62.5
2850	8260	40	10	206.5	3.25	65
2860	8270	40	10	206.75	3.375	67.5
2870	8280	40	10	207	3.5	70
2880	8290	40	10	207.25	3.625	72.5
2890	8300	40	10	207.5	3.75	75
2900	8310	40	10	207.75	3.875	77.5
2910	8320	40	10	208	4	80
2920	8330	40	10	208.25	4.125	82.5
2930	8340	40	10	208.5	4.25	85
2940	8350	40	10	208.75	4.375	87.5
2950	8360	40	10	209	4.5	90
2960	8370	40	10	209.25	4.625	92.5
2970	8380	40	10	209.5	4.75	95
2980	8390	40	10	209.75	4.875	97.5
2990	8400	41	10.25	204.8781	2.5	50
3000	8410	41	10.25	205.1219	2.625	52.5
3010	8420	41	10.25	205.3659	2.75	55
3020	8430	41	10.25	205.6098	2.875	57.5
3030	8440	41	10.25	205.8537	3	60
3040	8450	41	10.25	206.0976	3.125	62.5
3050	8460	41	10.25	206.3415	3.25	65
3060	8470	41	10.25	206.5854	3.375	67.5
3070	8480	41	10.25	206.8293	3.5	70
3080	8490	41	10.25	207.0732	3.625	72.5
3090	8500	41	10.25	207.3171	3.75	75
3100	8510	41	10.25	207.561	3.875	77.5
3110	8520	41	10.25	207.8049	4	80
3120	8530	41	10.25	208.0488	4.125	82.5
3130	8540	41	10.25	208.2927	4.25	85
3140	8550	41	10.25	208.5366	4.375	87.5
3150	8560	41	10.25	208.7805	4.5	90
3160	8570	41	10.25	209.0244	4.625	92.5
3170	8580	41	10.25	209.2683	4.75	95
3180	8590	41	10.25	209.5122	4.875	97.5
3190	8600	42	10.5	204.7619	2.5	50
3200	8610	42	10.5	205	2.625	52.5
3210	8620	42	10.5	205.2381	2.75	55
3220	8630	42	10.5	205.4762	2.875	57.5
3230	8640	42	10.5	205.7143	3	60
3240	8650	42	10.5	205.9524	3.125	62.5
3250	8660	42	10.5	206.1905	3.25	65
3260	8670	42	10.5	206.4286	3.375	67.5
3270	8680	42	10.5	206.6667	3.5	70
3280	8690	42	10.5	206.9048	3.625	72.5
3290	8700	42	10.5	207.1429	3.75	75

F_E	$N'*F_N$	N'	N	F_N	M	F_M
3300	8710	42	10.5	207.381	3.875	77.5
3310	8720	42	10.5	207.619	4	80
3320	8730	42	10.5	207.8571	4.125	82.5
3330	8740	42	10.5	208.0952	4.25	85
3340	8750	42	10.5	208.3333	4.375	87.5
3350	8760	42	10.5	208.5714	4.5	90
3360	8770	42	10.5	208.8095	4.625	92.5
3370	8780	42	10.5	209.0476	4.75	95
3380	8790	42	10.5	209.2857	4.875	97.5
3390	8800	43	10.75	204.6512	2.5	50
3400	8810	43	10.75	204.8837	2.625	52.5
3410	8820	43	10.75	205.1163	2.75	55
3420	8830	43	10.75	205.3488	2.875	57.5
3430	8840	43	10.75	205.5814	3	60
3440	8850	43	10.75	205.8139	3.125	62.5
3450	8860	43	10.75	206.0465	3.25	65
3460	8870	43	10.75	206.2791	3.375	67.5
3470	8880	43	10.75	206.5116	3.5	70
3480	8890	43	10.75	206.7442	3.625	72.5
3490	8900	43	10.75	206.9767	3.75	75
3500	8910	43	10.75	207.2093	3.875	77.5
3510	8920	43	10.75	207.4419	4	80
3520	8930	43	10.75	207.6744	4.125	82.5
3530	8940	43	10.75	207.907	4.25	85
3540	8950	43	10.75	208.1395	4.375	87.5
3550	8960	43	10.75	208.3721	4.5	90
3560	8970	43	10.75	208.6046	4.625	92.5
3570	8980	43	10.75	208.8372	4.75	95
3580	8990	43	10.75	209.0698	4.875	97.5
3590	9000	44	11	204.5455	2.5	50
3600	9010	44	11	204.7727	2.625	52.5
3610	9020	44	11	205	2.75	55
3620	9030	44	11	205.2273	2.875	57.5
3630	9040	44	11	205.4545	3	60
3640	9050	44	11	205.6818	3.125	62.5
3650	9060	44	11	205.9091	3.25	65
3660	9070	44	11	206.1364	3.375	67.5
3670	9080	44	11	206.3636	3.5	70
3680	9090	44	11	206.5909	3.625	72.5
3690	9100	44	11	206.8182	3.75	75
3700	9110	44	11	207.0455	3.875	77.5
3710	9120	44	11	207.2727	4	80
3720	9130	44	11	207.5	4.125	82.5
3730	9140	44	11	207.7273	4.25	85
3740	9150	44	11	207.9545	4.375	87.5
3750	9160	44	11	208.1818	4.5	90
3760	9170	44	11	208.4091	4.625	92.5
3770	9180	44	11	208.6364	4.75	95
3780	9190	44	11	208.8636	4.875	97.5
3790	9200	45	11.25	204.4444	2.5	50
3800	9210	45	11.25	204.6667	2.625	52.5
3810	9220	45	11.25	204.8889	2.75	55
3820	9230	45	11.25	205.1111	2.875	57.5
3830	9240	45	11.25	205.3333	3	60
3840	9250	45	11.25	205.5556	3.125	62.5
3850	9260	45	11.25	205.7778	3.25	65

F_E	$N'*F_N$	N'	N	F_N	M	F_M
3860	9270	45	11.25	206	3.375	67.5
3870	9280	45	11.25	206.2222	3.5	70
3880	9290	45	11.25	206.4444	3.625	72.5
3890	9300	45	11.25	206.6667	3.75	75
3900	9310	45	11.25	206.8889	3.875	77.5
3910	9320	45	11.25	207.1111	4	80
3920	9330	45	11.25	207.3333	4.125	82.5
3930	9340	45	11.25	207.5556	4.25	85
3940	9350	45	11.25	207.7778	4.375	87.5
3950	9360	45	11.25	208	4.5	90
3960	9370	45	11.25	208.2222	4.625	92.5
3970	9380	45	11.25	208.4444	4.75	95
3980	9390	45	11.25	208.6667	4.875	97.5
3990	9400	46	11.5	204.3478	2.5	50
4000	9410	46	11.5	204.5652	2.625	52.5
4010	9420	46	11.5	204.7826	2.75	55
4020	9430	46	11.5	205	2.875	57.5
4030	9440	46	11.5	205.2174	3	60
4040	9450	46	11.5	205.4348	3.125	62.5
4050	9460	46	11.5	205.6522	3.25	65
4060	9470	46	11.5	205.8696	3.375	67.5
4070	9480	46	11.5	206.087	3.5	70
4080	9490	46	11.5	206.3044	3.625	72.5
4090	9500	46	11.5	206.5217	3.75	75
4100	9510	46	11.5	206.7391	3.875	77.5
4110	9520	46	11.5	206.9565	4	80
4120	9530	46	11.5	207.1739	4.125	82.5
4130	9540	46	11.5	207.3913	4.25	85
4140	9550	46	11.5	207.6087	4.375	87.5
4150	9560	46	11.5	207.8261	4.5	90
4160	9570	46	11.5	208.0435	4.625	92.5
4170	9580	46	11.5	208.2609	4.75	95
4180	9590	46	11.5	208.4783	4.875	97.5
4190	9600	47	11.75	204.2553	2.5	50
4200	9610	47	11.75	204.4681	2.625	52.5
4210	9620	47	11.75	204.6808	2.75	55
4220	9630	47	11.75	204.8936	2.875	57.5
4230	9640	47	11.75	205.1064	3	60
4240	9650	47	11.75	205.3192	3.125	62.5
4250	9660	47	11.75	205.5319	3.25	65
4260	9670	47	11.75	205.7447	3.375	67.5
4270	9680	47	11.75	205.9574	3.5	70
4280	9690	47	11.75	206.1702	3.625	72.5
4290	9700	47	11.75	206.383	3.75	75
4300	9710	47	11.75	206.5957	3.875	77.5
4310	9720	47	11.75	206.8085	4	80
4320	9730	47	11.75	207.0213	4.125	82.5
4330	9740	47	11.75	207.234	4.25	85
4340	9750	47	11.75	207.4468	4.375	87.5
4350	9760	47	11.75	207.6596	4.5	90
4360	9770	47	11.75	207.8723	4.625	92.5
4370	9780	47	11.75	208.0851	4.75	95
4380	9790	47	11.75	208.2979	4.875	97.5
4390	9800	48	12	204.1667	2.5	50
4400	9810	48	12	204.375	2.625	52.5
4410	9820	48	12	204.5833	2.75	55

F_E	$N'*F_N$	N'	N	F_N	M	F_M
4420	9830	48	12	204.7917	2.875	57.5
4430	9840	48	12	205	3	60
4440	9850	48	12	205.2083	3.125	62.5
4450	9860	48	12	205.4167	3.25	65
4460	9870	48	12	205.625	3.375	67.5
4470	9880	48	12	205.8333	3.5	70
4480	9890	48	12	206.0417	3.625	72.5
4490	9900	48	12	206.25	3.75	75
4500	9910	48	12	206.4583	3.875	77.5
4510	9920	48	12	206.6667	4	80
4520	9930	48	12	206.875	4.125	82.5
4530	9940	48	12	207.0833	4.25	85
4540	9950	48	12	207.2917	4.375	87.5
4550	9960	48	12	207.5	4.5	90
4560	9970	48	12	207.7083	4.625	92.5
4570	9980	48	12	207.9167	4.75	95
4580	9990	48	12	208.125	4.875	97.5
4590	10000	49	12.25	204.0816	2.5	50
4600	10010	49	12.25	204.2857	2.625	52.5
4610	10020	49	12.25	204.4898	2.75	55
4620	10030	49	12.25	204.6939	2.875	57.5
4630	10040	49	12.25	204.898	3	60
4640	10050	49	12.25	205.102	3.125	62.5
4650	10060	49	12.25	205.3061	3.25	65
4660	10070	49	12.25	205.5102	3.375	67.5
4670	10080	49	12.25	205.7143	3.5	70
4680	10090	49	12.25	205.9184	3.625	72.5
4690	10100	49	12.25	206.1225	3.75	75
4700	10110	49	12.25	206.3265	3.875	77.5
4710	10120	49	12.25	206.5306	4	80
4720	10130	49	12.25	206.7347	4.125	82.5
4730	10140	49	12.25	206.9388	4.25	85
4740	10150	49	12.25	207.1429	4.375	87.5
4750	10160	49	12.25	207.3469	4.5	90
4760	10170	49	12.25	207.551	4.625	92.5
4770	10180	49	12.25	207.7551	4.75	95
4780	10190	49	12.25	207.9592	4.875	97.5
4790	10200	50	12.5	204	2.5	50
4800	10210	50	12.5	204.2	2.625	52.5
4810	10220	50	12.5	204.4	2.75	55
4820	10230	50	12.5	204.6	2.875	57.5
4830	10240	50	12.5	204.8	3	60
4840	10250	50	12.5	205	3.125	62.5
4850	10260	50	12.5	205.2	3.25	65
4860	10270	50	12.5	205.4	3.375	67.5
4870	10280	50	12.5	205.6	3.5	70
4880	10290	50	12.5	205.8	3.625	72.5
4890	10300	50	12.5	206	3.75	75
4900	10310	50	12.5	206.2	3.875	77.5
4910	10320	50	12.5	206.4	4	80
4920	10330	50	12.5	206.6	4.125	82.5
4930	10340	50	12.5	206.8	4.25	85
4940	10350	50	12.5	207	4.375	87.5
4950	10360	50	12.5	207.2	4.5	90
4960	10370	50	12.5	207.4	4.625	92.5
4970	10380	50	12.5	207.6	4.75	95
4980	10390	50	12.5	207.8	4.875	97.5
4990	10400	50	6.25	208	2.5	50
5000	10410	51	12.75	204.1176	2.625	52.5
5010	10420	51	12.75	204.3137	2.75	55
5020	10430	51	12.75	204.5098	2.875	57.5
5030	10440	51	12.75	204.7059	3	60
5040	10450	51	12.75	204.902	3.125	62.5
5050	10460	51	12.75	205.098	3.25	65
5060	10470	51	12.75	205.2941	3.375	67.5
5070	10480	51	12.75	205.4902	3.5	70
5080	10490	51	12.75	205.6863	3.625	72.5
5090	10500	51	12.75	205.8824	3.75	75
5100	10510	51	12.75	206.0784	3.875	77.5
5110	10520	51	12.75	206.2745	4	80
5120	10530	51	12.75	206.4706	4.125	82.5
5130	10540	51	12.75	206.6667	4.25	85
5140	10550	51	12.75	206.8627	4.375	87.5
5150	10560	51	12.75	207.0588	4.5	90
5160	10570	51	12.75	207.2549	4.625	92.5
5170	10580	51	12.75	207.451	4.75	95
5180	10590	51	12.75	207.6471	4.875	97.5
5190	10600	52	13	203.8462	2.5	50
5200	10610	52	13	204.0385	2.625	52.5

5.1.3.2 Reference Frequency Generation

(Reference 1 and reference 2 modules)
(See also Fig. 5-5)

The reference 1 and reference 2 modules generate the reference frequencies of 10 MHz, 20 MHz, 200 MHz as well as others for the synthesizer modules.

All frequencies are locked in phase to a 10-MHz frequency standard (OCXO) by means of PLL circuits. The extremely low-noise 10-MHz VCXO delivers the 10-MHz reference frequency (for the sweep synthesizer and summing loop modules) as well as 20 MHz, by doubling, for the M synthesizer module and is used, after further multiplication by 5, to control the phase of the 100-MHz VCXO. The doubled 100-MHz VCXO signal is used as a conversion signal in the N synthesizer and sweep synthesizer modules and also serves as 3rd local oscillator and, following multiplying and filtering, as a 2nd local oscillator with 5.2 GHz.

A 10-MHz signal is also applied to the IF counter module, and a 100-MHz signal with an exact level to the calibration output of the instrument.

10-MHz reference signal is applied to the reference frequency output of the instrument on the rear panel. Application of an external 10-MHz signal is possible as an option to synchronize the 10-MHz VCXO.

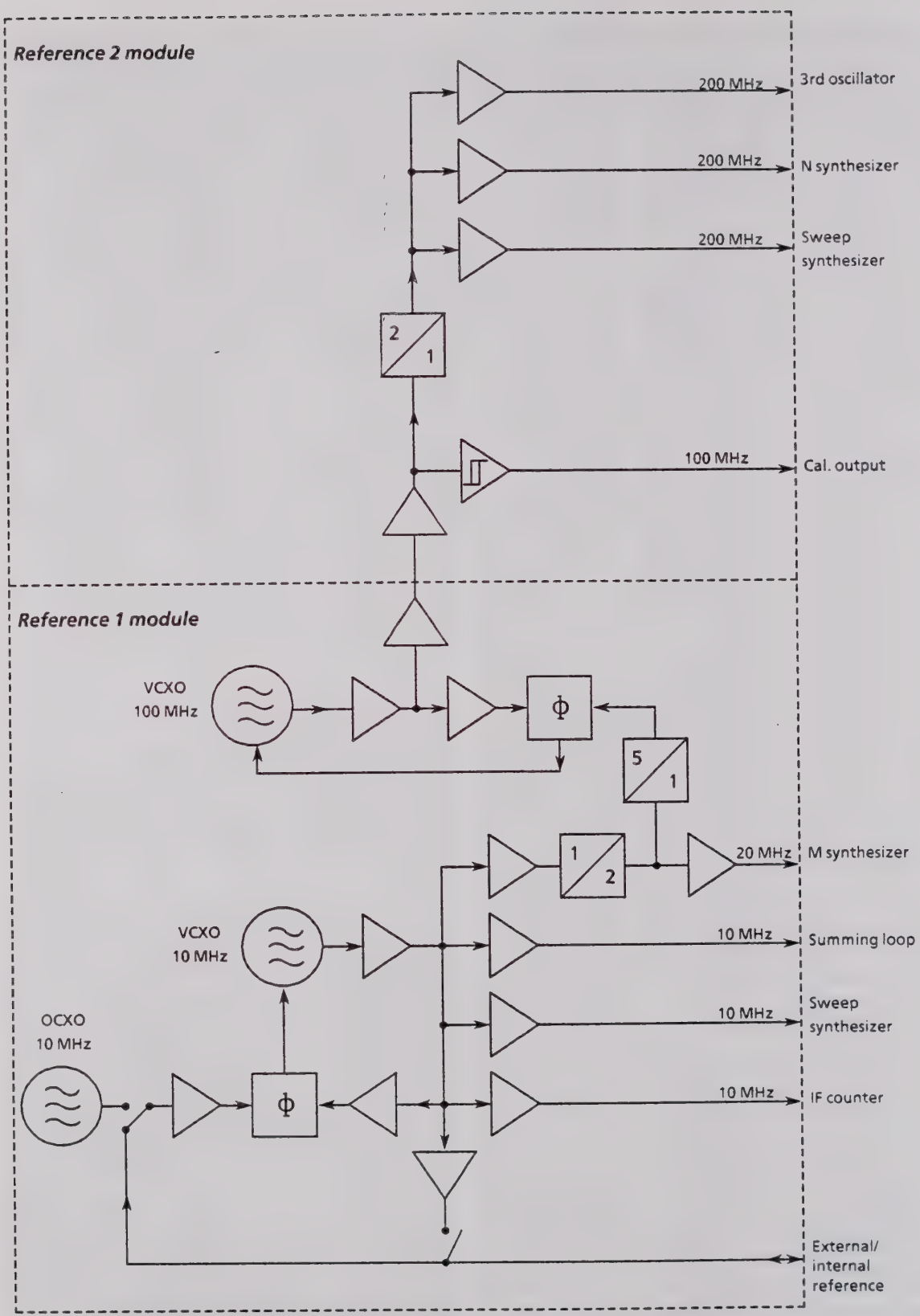

Fig. 5-5 Reference frequency generation (reference 1 and reference 2 modules)

5.1.3.3 N Synthesizer, M Synthesizer

Together with the M synthesizer, the N synthesizer generates the basic frequency of the comb spectrum which is used for the down-conversion of the YIG oscillator. Fig. 5-6 shows the basic circuit.

The output frequency of the M/N synthesizer (from the N synthesizer module) is calculated as follows with the (fractional) divider factors M and N:

$$F_N = 200 + 20 \times \frac{M}{N} \qquad [MHz]$$

The divider factors M and N, and thus F_N, are set depending on the entered start or centre frequency so that the corresponding harmonic of F_N ($N' \cdot F_N$) is available with 10-MHz spacing (see Table 5-1).

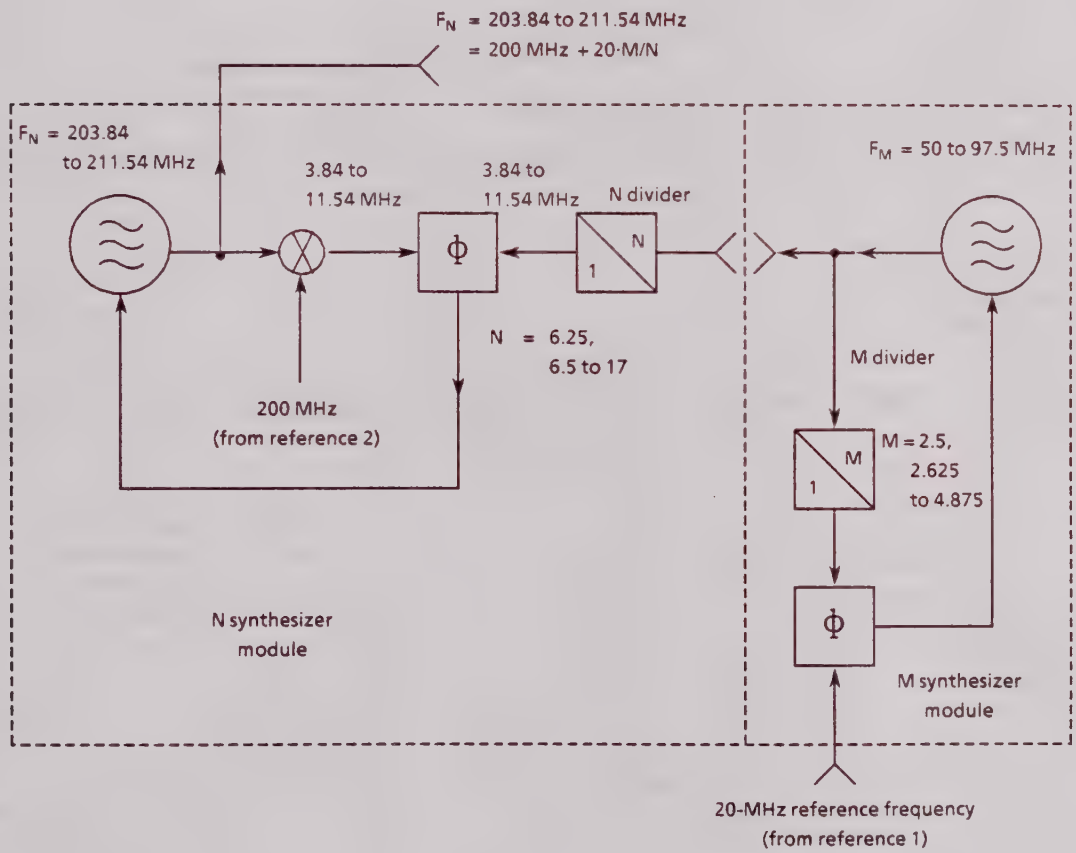

Fig. 5-6 N synthesizer, M synthesizer

5.1.3.4 Interpolation Synthesizer
(Summing loop and sweep synthesizer modules)

The interpolation synthesizer is responsible for fine tuning of the YIG oscillator within the spectral line spacing of 10 MHz and for continuous or quasi-continuous sweeping up to a maximum span of 5 MHz. In the case of the single-loop sweep, the output signal of the sweep synthesizer is simply looped through the summing loop module. The following applies in this case: $F_{Interpol.\ synth.} = F_{Sweep\ synth.}$. Single-loop mode is used for resolution bandwidths ≥ 3 kHz if the best possible phase noise close to the carrier is not important.

An extremely low-noise signal is required for bandwidths < 3 kHz. Multi-loop mode is selected for this case. The sweep synthesizer signal is then divided in the summing loop module, converted and subsequently divided again so that an oscillator signal of 10 to 20 MHz with greatly improved phase noise is available at the output of the summing loop module.

Fig. 5-7 shows the basic circuit of the interpolation synthesizer.

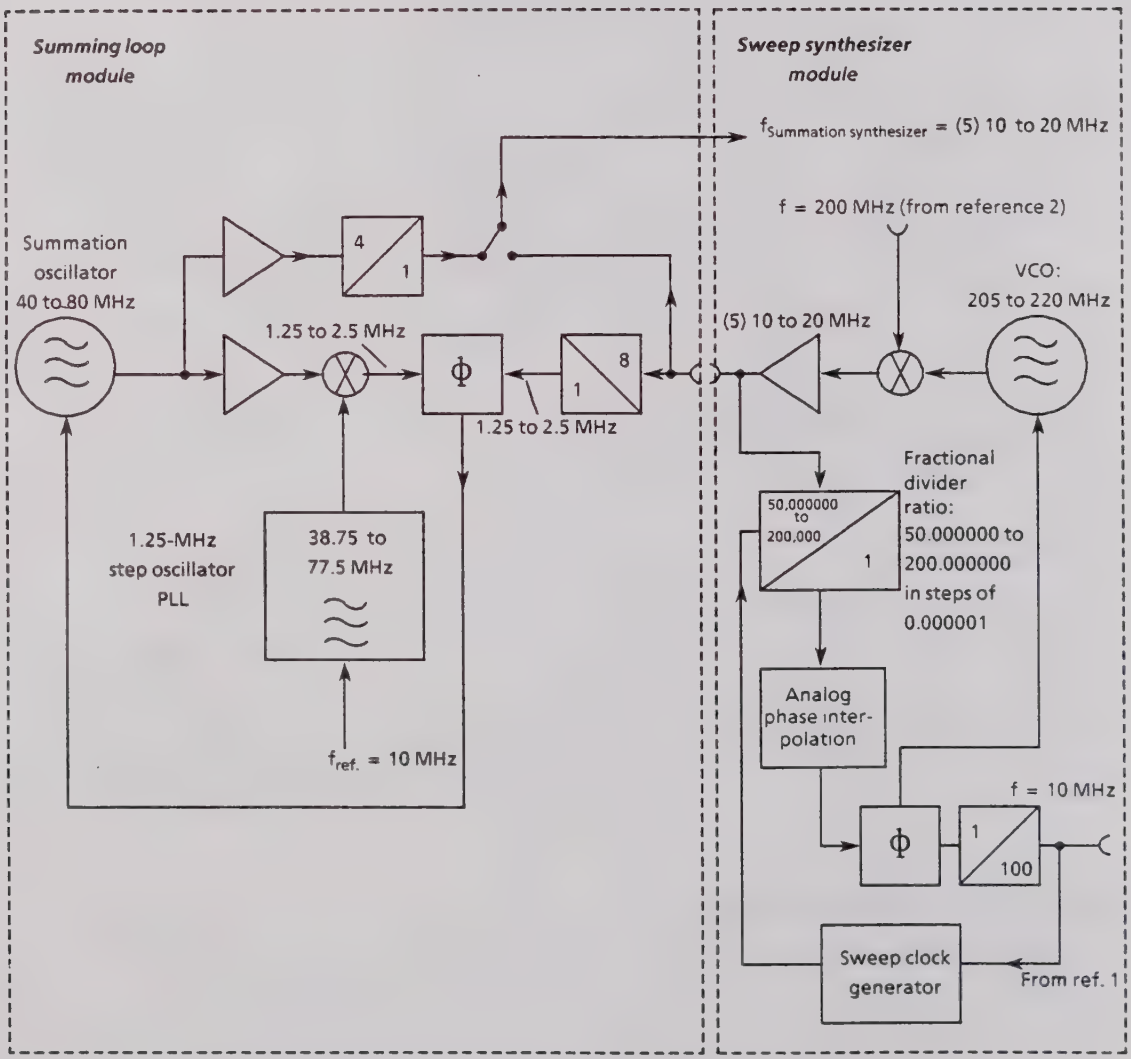

Fig. 5-7 Interpolation synthesizer (summing loop and sweep synthesizer modules)

5.1.3.5 2nd Local Oszillator

The 2nd LO frequency of 5200 MHz is generated by multiplying of a 200-MHz reference signal of high spectral purity. The 200-MHz signal is doubled and filtered, then multiplied and filtered again at 5200 MHz to suppress undesired multiples of 200 MHz (or 400 MHz) (see Fig. 5.8).

5.1.3.6 3rd Local Oszillator

The 200-MHz reference signal is directly used as 3rd local oscillator.

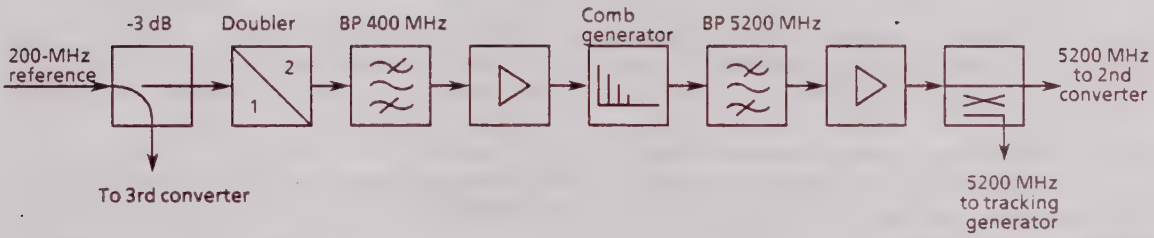

Fig. 5-8 Basic diagram of 2nd/3rd local oscillator

5.2 Mechanical Design

(See exploded views in Appendix, Figs. 5-10 to 5.12)

The RF unit is constructed in design 90. The housing has a height of 4 standard units. Handles are located on the left and right. Two additional handles can also be fitted on the left and right of the front panel.

The instrument comprises an internal frame (with motherboard) resulting from the front and rear panel frames and corresponding rails.

The cover panels comprise two side units and the top and bottom covers. An additional plate is fitted underneath the top cover to increase the lateral stability.

The instrument has been designed for easy servicing. The modules are easy to replace, the power pack assembly can be removed to the rear, the front panel to the front.

Before carrying out adjustments on the RF unit, it must be isolated from the associated display unit by loosening the two knurled screws and disconnecting the cables.

5.2.1 Opening the Instrument
(See Fig. 5-10)

- Remove the left and right rear-panel feet (4 screws in all).
- Push top and bottom covers (6, 7) to the rear and remove.
- Unscrew the inner cover (33).

Reassemble in the reverse order.

5.2.2 Removing the Front Panel
(See Fig. 5-10)

The front panel can be removed as follows with the instrument closed:

- Loosen 3 screws each on the top and bottom of the housing in the groove.
- Remove the front panel.

5.2.3 Dismounting the Front Panel
(See Fig. 5-10)

- Unscrew the spinwheel (55).
- Loosen the screw at the rear of the keyboard PCB.
- Separate the two parts. (The cover plate and the mounting plate need not be separated from one another.)

5.2.4 Removing the Attenuator Module
(See Fig. 5-11)

After removing the front panel (see 5.2.2):

- Loosen the three union nuts of the SMA coaxial cable (W10, W20, W23) on the attenuator (168).
- Disconnect the control cable.
- Loosen the three screws on the mounting bracket.
- Remove the attenuator upwards.

Refit in the reverse order. Ensure correct connection of X1, X2.

5.2.5 Removing the Reference 1 Module
(See Fig. 5-11)

After opening the instrument (see 5.2.1):

- Loosen the coaxial cables.
- Disconnect the power supply cable.
- Loosen the four screws (81) on the frame rails at the side.
- Remove the module upwards.

Refit in the reverse order.

5.2.6 Removing the RF Module

(See Fig. 5-11)

After opening the instrument (see 5.2.1):

- Loosen the coaxial cable to the YIG synchronization and to the attenuator on the top of the RF module (2 x SMA).
- Loosen the coaxial cables to the 2nd oscillator and the 3rd converter (2 x SMA).
- Disconnect the power supply cable from the motherboard.
- Loosen the four screws (150) on the frame rails at the side.
- Remove the RF module upwards (together with the bandpass 1st IF).

Refit in the reverse order.

5.2.7 Removing the YIG Oscillator Module

(See Fig. 5-11)

After opening the instrument (see 5.2.1):

- Disconnect the coaxial cable between the YIG oscillator and YIG synchronization.
- Disconnect the supply cable of the YIG oscillator from the YIG pretune.
- Loosen the two screws (159) of the YIG oscillator screen housing from above.
- Remove the YIG-oscillator screen-housing downwards.

Refit in the reverse order.

5.2.8 Removing the YIG Oscillator from the Screen Housing

(See Fig. 5-11)

- Loosen the two screws at the side.
- Remove the screen cover.
- Loosen the four screws underneath the housing.
- Remove the actual YIG oscillator module.

Refit in the reverse order.

5.2.9 Removing the Power Supply Assembly

(See Fig. 5-12)

Caution: Disconnect the AC power supply cable before removing the assembly.

- Loosen the 5 screws (220) on the perforated part of the rear panel (207) of the power pack and the 4 screws (222) on the transformer support (208).
- Pull out the power pack by approx. 10 cm.
- Disconnect the cable between the power pack assembly and the motherboard.

The AC transformer and the internal ventilator are now accessible.

Refit in the reverse order.

5.3 Testing and Adjustment

5.3.1 List of Modules

Unit/ Comp. No.	Module	Stock No.	Colour code
A1	Basic assembly	---	–
A11	Front panel	806.4811	–
A12	Motherboard	808.2016	–
A13	Rear panel	848.1304	–
A111	Keyboard	806.5018	–
A2	Power supply assembly	808.4019	–
A21	Power supply	808.4819	–
A22	Power supply	808.4519	–
A3	RF/IF assembly	---	–
A31	Attenuator	849.3517	–
A32	RF module	848.9511	–
A34	Preamplifier 3rd IF	848.8009	–
A4	Synthesizer assembly	---	–
A41	YIG oscillator	848.7519	–
A42	YIG synchronization	849.2010	–
A43	YIG pretune	848.6506	–
A44	2nd LO/ 3rd converter	848.3507	–
A45	Sweep synthesizer	807.5011	–
A46	Summing loop	807.4015	–
A47	M synthesizer	807.0010	–
A48	N synthesizer	849.1014	–
A5	Reference assembly	---	–
A51	Reference 1	848.5000	–
A52	Reference 2	807.3019	–
A6	Frequency processor assembly	---	–
A61	Frequency processor	810.3400	red
A63	Interface	807.7014	yellow

5.3.2 Summary of Important Controls

Unit/ Comp. No.	Module	Adjustment	Element	Section
A2	Power supply assembly			5.3.3.1
A21	Power supply	Supply voltages + 5 V/ + 5 V*/ + 20 V/ + 28 V	R97	5.3.3.1.1
A22	Power supply	Supply voltages + 12 V/ + 15 V/-15 V	R23	5.3.3.1.2
A3	RF/IF assembly			5.3.3.4
A31	Attenuator			5.3.3.4.1
A32	RF module	Dielectric bandpass Minimum attenuation of mixture products Filter passband Bandpass 1st IF	Tuning screws C32 Tuning screws Tuning screws	5.3.3.4.2
A34	Preamplifier 3rd IF	5 dB 10 dB 20 dB A/D converter PIN controller Min. gain PIN controller Max. gain Over-All-Gain RF unit	R66 R74 R86 R3 R35 R40 R144 R147	5.3.3.4.3
A4	Synthesizer assembly			5.3.3.3
A41	YIG oscillator			5.3.3.3.1
A42	YIG synchronization	Output level Multiplier	R176 R2	5.3.3.3.3
A43	YIG pretune	Lower voltage Upper voltage Upper FM voltage Fixed frequency YIG Max. start frequency Max. sweep FM sensitivity Sweep output amplitude	R181 R184 R178 R100 R103 R91 R42 R82	5.3.3.3.2
A44	2nd LO/3rd converter	10 dB VSWR X4 LO amplifier	R35 L96 L110	5.3.3.3.8
A45	Sweep synthesizer	Start frequency Phase interpolation	C185 R118	5.3.3.3.7

*) Final adjustment

Unit/ Comp. No.	Module	Adjustment	Element	Section
A46	Summing loop	Level of summation oscillator Control voltage addition of sweep synthesizer Command value of control voltage for summation oscillator Level of 1.25-MHz step oscillator Gain of step oscillator PLL Frequency of summation oscillator Frequency of step oscillator	R7 R105 R114 R309 R385 L500 L600	5.3.3.3.6
A47	M synthesizer	Oscillator amplitude PLL filter pole 2.5 MHz PLL filter pole 5 MHz	R14 L62 L63 L60 L61	5.3.3.3.5
A48	N synthesizer	Oscillator frequency Max. RF gain Preliminary adjustment	C7 L71 L111 R15 R226	5.3.3.3.4
A5 A51	Reference assembly Reference 1	Level 10 MHz Frequency 100 MHz (LC resonant circuit)	C237 L31	5.3.3.2 5.3.3.2.1
A52	Reference 2	Output level X1 Output level X3 Output level X4 Max. 200-MHz level Level of CALIB. OUTPUT Internal calibration level	L134 L135 L137 L112 R88 R75	5.3.3.2.2

5.3.3 Assembly and Module Tests

Level diagram/coaxial connections
(shown in circuit diagram 848.0550 S)

Module - motherboard connections
(shown in circuit diagram 848.0550 S)

Motherboard connections
(shown in circuit diagram 808.2016 S)

After opening the housing, it is recommendable to place the RF unit upright on its side for servicing.

It is recommendable to use the Service Kit FS-Z1 (811.0010.02) and the Service Cable Set FS-Z2 (811.0304.02).

The display unit must always be used during servicing as important settings which depend on the connections inside the instrument could not otherwise be carried out.

Check that the AC supply is set to the correct value!

5.3.3.1 Power Supply Assembly (A2)

(See circuit diagram 808.4019 S)

After switching on both units on their rear panels and then on the front panel, carry out the following optical checks:

- Yellow and green LEDs light up on rear panel.
- LEDs light up on power supply assembly.
- Blower in rear panel rotates.
- Blower in power supply assembly rotates.

5.3.3.1.1 Checking the Voltages from Power Supply (A21)

(On the motherboard between X46 and X47)

Connector	Contact	Voltage	Tolerance
X46 ABC	31	+5 V	2 %
X46 ABC	3	+5.84 V	2 %
X46 ABC	11	+20 V	2 %
X46 ABC	13	+28 V	1 %

Adjust using R97 (see module description "Power supply", A21).

5.3.3.1.2 Checking the Voltages from Power Supply (A22)

(On the motherboard between X46 and X47, exception: X222/14)

Connector	Contact	Voltage	Tolerance
X46 ABC	7	+15 V	1 %
X46 ABC	9	−15 V	2 %
X222	14	+12 V	4 %

Adjust using R23 (see module description "Power supply", A22).

5.3.3.2 Reference Assembly (A5)

5.3.3.2.1 Reference 1 (A51)

- Check the external synchronization (SETUP mode).
- Check the frequency and level at the outputs W31, W33, X34, W35, W36.
- Readjust the internal reference oscillator only after a warm-up of several hours (see module description "Reference 1").

5.3.3.2.2 Reference 2 (A52)

- Check the frequency and level at the outputs X1, X3, X4, X7, X8.
- Check the decoupling between the outputs.

Level adjustment of calibration sources

The calibration sources should only be adjusted if a level meter of sufficient accuracy is available.

In order to incorporate the cable attenuation, measure at the front panel socket CAL OUTPUT 38 using a probe with a 50-Ω terminator.

Adjust to -20 dBm ± 0.05 dB using R88. Then call service routine 1.52.01 and connect the socket CAL OUTPUT 38 to socket RF INPUT 37 via a short cable.

Adjust to -20 dBm ± 0.05 dB using R75.

Caution: R75 must be adjusted after R88!

The setting can be cancelled using service routine 1.52.00.

- Refer to the module description "Reference 2" for further adjustments.

5.3.3.3 Synthesizer Assembly (A4)

The frequency generation of the first conversion oscillator is described in 5.1.3. The output frequencies of the individual modules can then be calculated and checked for a defined instrument setting.

5.3.3.3.1 YIG Oscillator (A41)

- Check the frequency and output level at X1.
- Check the spectral purity.

5.3.3.3.2 YIG Pretune (A43)

- Check the frequency-proportional current of the main tuning.
- Check the sawtooth voltage.
- See module description "YIG pretune" for adjustments.

5.3.3.3.3 YIG Synchronization (A42)

- Check the frequency and output level at W16.
- Check the spectral purity.
- See module description "YIG synchronization" for adjustments.

5.3.3.3.4 N Synthesizer (A48)

- Check the frequency and output level at X8 at various frequencies.
- Check the spectral purity.
- See module description "N synthesizer" for adjustments.

5.3.3.3.5 M Synthesizer (A47)

- Check the frequency and output level at X1 at various frequencies.
- Check the spectral purity.
- See module description "M synthesizer" for adjustments.

5.3.3.3.6 Summing Loop (A46)

- Check the frequency and output level at X1 at various frequencies.
- Check the spectral purity.

In addition to the microprocessor control of the instrument, correct functioning of the following synthesizer modules is necessary:

Reference 1
Reference 2
Sweep synthesizer

Switch the instrument to uncalibrated (frequency calibration).

- See module description "Summing loop" for adjustments.

5.3.3.3.7 Sweep Synthesizer (A45)

- Check the frequency, output level and spectral purity at X1 at various frequencies.
- See module description "Sweep synthesizer" for adjustments.

5.3.3.3.8 2nd LO/3rd Converter (A44)

- Check frequency, output level and spectral purity of the 5.2-GHz oscillator signal.
- See module description "2nd LO/3rd converter" for adjustments.
  Check the conversion gain of the 3rd converter.

Equipment required:

- Extender card (811.0040)
- 3 SMC extension cables
- SMA extension cables
- Signal generator

Preparation

- Unscrew cables W30, W72, W83, W85 and W88 from A44, plug A44 onto extender card and reconnect W30, W72, W83 and W85 via the extension cables to A44.

Testing and adjusting the gain

- Connect signal generator with 100 MHz / 0 dBm to the RF INPUT socket of the analyzer and enter the following setting:

- PRESET
- CF 100 MHz; SPAN 10 kHz; RBW 3 kHz; VBW 100 Hz; REF.LEV 2 dBm; 1 dB/DIV; RF-ATT 22 dB
- Press MKR → PEAK and MKR → CENTER
- Press MENU ⇒ and REF. FIXED
- Switch on RF-ATT 12 dB and adjust Δ-MKR level to 0 ± 0.02 dB using R35.

5.3.3.4 RF/IF Assembly (A3)

The RF/IF assembly is best checked completely via the modules A31, A32, A33, A34 and A44, since frequency compensation of A31 and A32 is made in A34.

5.3.3.4.1 Attenuator (A31)

- Check the attenuation steps in 1-dB steps in mode LOW DISTORTION. (f = 100 MHz, connect RF input to calibration output.)

5.3.3.4.2 RF Module (A32)

- Check the frequency response with an exact input level between 100 Hz and 5 GHz.
- Check the linearity characteristics (distortion response, intermodulation characteristics).

Caution! EEPROM D1 must be reprogrammed in the preamplifier 3rd IF module if module A32 is replaced.

5.3.3.4.3 Preamplifier 3rd IF (A34)

Equipment required

- Attenuator (e.g. DPSP)

Testing and adjusting the amplifier stages

Connect the CAL OUTPUT and the RF INPUT of the analyzer via an attenuation set and enter the following setting:

- PRESET
- CF 100 MHz; SPAN 10 kHz; RBW 3 kHz; REF. LEV –18 dBm; 1 dB/div.; ATT 10 dB;
- Set Attenuation set to 10 dB
- Press MKR→PEAK and MKR→CENTER
- Press MENU ⇒ and REF.FIXED
- Adjust the service function and attenuation set according to the following table and test or adjust the gain.

Service function	Attenuation set	Adjustment
1.34.01.20	10 dB	— Δ MKR display 0 dB
1.34.01.16	20 dB	R86 to Δ MKR level of 0 ±0.05 dB
1.34.01.21	5 dB	R66 to Δ MKR level of 0 ±0.05 dB
1.34.01.23	0 dB	R74 to Δ MKR level of 0 ±0.05 dB
1.34.01.17	15 dB	Δ MKR level of 0 ±0.1 dB

- Unscrew W50 from A34.X3.
- Connect W40 to A34.X3 and set attenuation set to 7 dB.
- Δ MKR level 0 ± 1 dB
- Connect W40 to A34.X1 again and W50 to A34.X3.

Testing the detector and overload display

- Set attenuation set to 0 dB and enter the following setting:

  REF.LEV –18 dBm
  ATT 0 dB
  SPAN 0 Hz
  Service function 1.34.01.39

- Check detector display:

  STLIFI: 1.4 mV ± 0.5 mV (X21.A16)
  STLIFO: 22 mV ± 5 mV (X21.A17)

- Set attenuation set to 20 dB and enter service function 1.44.01.12.

- Reduce attenuation set value to 9 ± 2 dB. The error message MSG (LEL2IF) must now appear.

- Press the PRESET key.

Programming of EEPROM D1

This process is described in Section 3 (Performance Test).

5.3.3.5 Frequency Processor Assembly (A6)

5.3.3.5.1 Frequency Processor (A61)

- Check by controlling the synthesizer and the sweep time.

5.3.3.5.2 Interface (A63)

- Check via frequency settings.

5.3.3.6 Basic Assembly (A1)

The basic assembly A1 comprises the basic unit of the instrument with front panel A11, motherboard A12 and rear panel A13.

5.3.3.6.1 Front Panel (A11)

- Check by means of frequency settings. No adjustments are necessary.

5.3.3.6.2 Motherboard (A12)

The wiring of the motherboard can be seen in circuit diagram 808.2016 S, the pin assignments in circuit diagram 848.0550 S.

5.3.3.6.3 Rear Panel (A13)

The pin assignments of the motherboard and the assignments of the plugs and sockets on the rear panel can be seen in circuit diagram 848.0550 S.

5.3.4 Final Check

The RF unit is checked by connecting the calibration output (100 MHz/-20 dBm) to the instrument input.

Tune the instrument to 100 MHz (span 0 Hz). Check the level according to the data in circuit diagram 848.0550 S.

The oscillator signals must also be checked if deviations occur in the RF/IF signal path.

Suppression of the 1st oscillator when tuning to a frequency of 0 MHz is important for correct functioning of the instrument.

Centre frequency: 0 MHz
Span: 0 MHz
RF attenuation: 0 dB
Reference level: –10 dBm
Display: <–15 dBm

5.3.4.1 Final Adjustment

The RF unit is automatically adjusted by the processor system. This assumes that the specifications of all modules are retained. A corresponding error message is output if the processor system cannot carry out the adjustment.

Subsequently proceed as in Section 5.4.

Equipment required:

- Power meter (–20 dBm)
- Signal generator

Preparation:

- Check the Cal. Out level using the power meter:
  –20 dBm ± 0.2 dB
  Adjust using R75 on the reference 2 module (A52).
- Connect the RF input to the Cal. Out output via a cable of known attenuation.

Check:

- Measure the output level at X10/A1:
  –14 dBm ± 0.5 dB
- Measure the RF frequency response at a minimum of 50 frequencies.

5.3.5 Summary of Adjustments on RF Unit Required When Replacing a Module

When replacing module:	Adjust according to Section
A11	–
A12	–
A13	–
A111	–
A21	–
A22	–
A31	5.3.4
A32	5.3.4
A33	5.3.4
A41	5.3.3.3.2, 5.3.4
A42	5.3.3.3.3, 5.3.4
A43	5.3.3.3.2, 5.3.4
A44	–
A45	–
A46	5.3.3.3.6
A47	5.3.3.3 5
A48	5.3.3.3.4
A51	–
A52	–
A61	–
A63	–

5.4 Troubleshooting

Connection of the associated display unit is essential for troubleshooting the RF unit. It is recommendable to use the longer cable between the RF unit and the display unit (FS-Z2, 811.0304.02). The instrument is set to a defined status by activating the on/off switch on the rear panel.

Status 1: Power pack signals faulty operation

Check the LEDs on the rear panel of the instrument. If a fault is indicated, disconnect all subassemblies by pulling out from the motherboard or by undoing the corresponding cable connections. The fault is in the power pack if the LED indication is still present after switching off and on again.

After repairing the power pack, check the LED indication and connect all modules to the motherboard again whilst observing the LEDs.

It is recommendable to check all supply voltages on the motherboard (between X46 and X47) using a high-impedance digital voltmeter.

Tune the instrument to a frequency of 100 MHz (span 0 Hz). Connect the calibration output on the front panel of the RF unit to the input socket.

Status 2: No signal display, no fault signal of synthesizer

Check the level on the attenuator module using a selective voltmeter (e.g. test receiver or spectrum analyzer).

A31.X1: –20 dBm ± 1 dB
A31.X3: –30 dBm ± 1 dB

Subsequently check the first and second oscillators:

A42, X16:	Level	+ 17 to + 21 dBm
	Frequency	5521.4 MHz
	Accuracy	~1×10^{-7}
A44, X5:	Level	-31.8 to –33.8 dB
	Frequency	221.4 MHz
	Accuracy	~1×10^{-7}
A44,X7:	Level	+ 17 to + 19 dBm
	Frequency	5200 MHz
	Accuracy	~1×10^{-7}

Check the RF module:

A32, X13:	Level	–38 to –36 dBm
	Frequency	221.4 MHz
	Accuracy	~1×10^{-7}

Check the preamplifier 2nd IF module:

A34, X1:	Level	–13.5 to –14.5 dBm
	Frequency	21.4 MHz
	Accuracy	~1×10^{-7}

Check the rear panel wiring:

A13,X132/A1:	Level	–13.5 to –14.5 dBm
	Frequency	21.4 MHz

The faulty module can be determined by this procedure. Amplitude errors with other settings of the reference level can be traced using the information in Section 4 (Service Manual of Complete Instrument, level diagrams: Figs. 4-3 to 4-10).

Status 3: No signal display, but fault signal of synthesizer

The module should be checked (input/output signals) according to the error message of the associated module and according to the information in Section 5.1.3.

If the faulty module has been repaired and it is still not possible to detect a signal, proceed as with status 2.

Caution!

- When replacing the preamplifier 3rd IF module (A34), the EEPROM in the original module must be fitted into the new module since this EEPROM is tuned to the RF module. In addition, the reference level must be adjusted on the step gain module using R158 (A33, display unit). If this is not possible, the EEPROM must be reprogrammed.

- The EEPROM in the preamplifier 3rd IF module (A34) must usually be reprogrammed if the RF module, YIG synchronization module or YIG pretune module is replaced. This should only be carried out by an authorized service centre.

- The RF frequency response of the instrument must be checked following adjustments on the RF module (replacement of mixer diodes or the GaAsFET V9). The EEPROM must in this case be reprogrammed.

5.4.1 Self-test

Preconditions for a successful self-test are:

- Correct operation of the power supplies
- Correct functioning of the main processor system with the graphics and monitor modules.

If the RF unit fails, the corresponding error messages are output on the screen of the display unit.

The selftest is initiated using the menu HELP.

5.4.2 List of Service Routines

The service functions are called by entering the following sequence:

Special Function ⇒ Service ⇒ $N_1.N_2N_3.N_4N_5.N_{DATA}$

The parameters have the following meaning:

$N_1 = 0$: Total instrument function (RF unit and display unit are tested simultaneously)

$N_1 = 1$: Function test in RF unit

$N_1 = 2$: Function test in display unit

N_2N_3: Module A N_2 N_3

N_4N_5: Max. 99 service functions per module

N_{DATA}: Number for the setting (not always required)

Entry	Function	Module
1.34.00 1.34.01.0 to 255 1.34.02.0 to 255 1.34.03.0 to 255 1.34.04.0 to 255 1.34.05.0 to 255	Normal Gain, Corr. Data Set (D8) Autorun control (D6) D/A converter (D5) EEPROM Address Latch Low (D4) EEPROM Address Latch High (D3)	Preamplifier 3rd IF
1.42.00 1.42.01 1.42.02	Normal YIG Loop Narrow YIG Loop Wide	YIG synchronization
1.43.00 1.43.01 1.43.02 1.43.03 1.43.04 1.43.05 1.43.06 1.43.07 1.43.08 1.43.09 1.43.10 1.43.11 1.43.12 1.43.13 1.43.14 1.43.15 1.43.16 1.43.17.1 to 10 1.43.18 1.43.19 1.43.20 1.43.21 1.43.22 1.43.23.1 to 4 1.43.24.1 to 3 1.43.25.1 to 3 1.43.26.1 to 3 1.43.27.1 to 2 1.43.28 1.43.29 1.43.30 1.43.31	Normal YIG spurious FM measurement Adjustment min. frequency Adjustment max. frequency Adjustment max. span Adjustment FM gain (1) Adjustment FM gain (2) Adjustment start/stop synchronization limit Adjustment synchronized speed limit Adjustment PSAWT SF gain Adjustment PSAWT SP gain Adjustment SAWT amplitude Adjustment start frequency.S&H offset Adjustment stop frequency S&H offset Testing sawtooth generator Testing sweep output Testing FRQSTP output Testing sweep filter Testing start frequency fine tuning (1) Testing start frequency fine tuning (2) Testing span fine tuning (1) Testing span fine tuning (2) Testing span fine tuning (3) Testing tuning filter and main coil filter Testing start frequency S&H Testing multiplier Testing stop frequency S&H Testing FM summing amplifier Testing FM coil driver Testing PSAWT voltage with FM sweep (1) Testing PSAWT voltage with FM sweep (2) Basic setting Testing PSAWT offset Testing sweep output Testing start frequency / fine tuning	YIG pretune
1.44.00 1.44.01	Normal 3rd Converter	2nd LO
1.45.00 1.45.01 1.45.02	Normal Single Loop Multi Loop	Sweep synthesizer
1.52.00 1.52.01	Normal CAL100MHz → Analyzer input	Reference 2
1.99.01.0 to 65535 1.99.02.0 to 255 1.99.03	Set Port Address Output Value to Port Read Port	

5.5 Required Measuring Equipment and Accessories

Item	Equipment	Required specifications	R&S equipment Order No.	Used with module
1	Digital multimeter AC/DC	1 µV to 250 V 0.1 mA to 1 A	UDS5 349.1510.02	A11 to A111
2	AC voltmeter		URE	A43
3	RF DC millivoltmeter	DC to 50 MHz 200 µV to 20 V	URV5 394.8010.02	A42 A47 A52
4	Plug-on divider	10:1	URV-Z6 292.5364.02	
5	Probe	---	URV5-Z7 395.2615.02	
6	Oscilloscope	0 to 100 MHz 5 mV/div	BOL 374.2000.02	A11 to A63
7	Digital storage oscilloscope	0 to 30 MHz 5 mV/div	BOS 845.0007.02	A21, A22, A45, A46, A47, A48, A52
8	Logic analyzer	20 MHz	LAS 344.4010.02	A33, A43, A45, A46, A47, A48, A61, A63, A111
9	Logic probe	HCMOS/TTL		A11, A12, A13, A31, A33, A42, A61, A111
10	Signal generator	100 kHz to 2160 MHz 50 Ω, −140 dBm to + 13 dBm	SMGU 819.0010.52	A32, A42 A43, A44 A46, A52
11	Network analyzer	10 MHz to 5 GHz 50 Ω, measuring range 80 dB		A31, A32 A33, A42 A44
12	Generator	10 MHz to 18 GHz 50 Ω, + 13 dBm	SWM 814.7016.05	
13	Demodulator	0.1 to 5000 MHz		
14	VSWR bridge	10 MHz to 5000 MHz 50 Ω, 40 dB		
15	AF analyzer with tracking generator	10 kHz to 10 MHz Gen.: 50 Ω Receiver unit: high-impedance		A47

Item	Equipment	Required specifications	R&S equipment Order No.	Used with module
16	Spectrum Analyzer	100 Hz to 13.7 GHz 50 Ω, –120 dBm Freq. accuracy: $< 2 \times 10^{-7}$		A33, A42, A44, A45 A47, A48, A51, A52
17	Power meter	100 nW to 500 mW 10 MHz to 13.7 GHz	NRV 828.2511.02	A31, A32, A33, A41, A42
18	Precision power sensor	100 nW to 500 mW 10 MHz to 13.7 GHz	NRV-Z2 828.3218.02	
19	Power combiner (hybrid)	100 Hz to 5 GHz 50 Ω, 30-dB decoupling		A32, A33
20	Lowpasses (2x)	100 Hz to 5 GHz 60 dB at $2 \times f_g$		
21	Directional coupler	5.4 to 10.6 GHz 50 Ω, directivity 10 dB		A32
22	Precision attenuation set	21.4 MHz 0 to 40 dB, 50 Ω	DPVP 214.8017.52	A33
23	Frequency counter	1 MHz to 10.6 GHz 50 Ω, 10 mV Generator: $< 1 \times 10^{-7}$ 7-digit		A41, A43, A45, A47, A48
24	DC voltage source	0 to 20 V	NGPS 192.0061.02	A43

Accessories

Service Kit FS-Z1 (811.0010.02)
Connection cable set FS-Z2 (811.0304.02)
Coaxial connector SMC/Cannon
50-Ω Terminators SMC and SMA
Plug-in jumpers
21.4-MHz bandpass (see Section 3.4.5)

ROHDE&SCHWARZ

Liste mechanischer Teile

List of mechanical parts

Bilder zur Liste mechanischer Teile

Figures pertaining to list of mechanical parts

R 44830

Liste zu den Bildern 5-10 ... 5-12 (HF-Teil)

List for Figs. 5-10 to 5-12 (RF unit)

Lfd. Nr.	Kenn-zeichen	Menge	Benennung/Beschreibung	Sachnummer
No.	Unit/ Comp.No.	Qty.	Designation	Stock No.
1		1	ZM Rückwandfuß, links 4E Rear-panel foot, left	396.4370
2		1	ZM Rückwandfuß, rechts 4E Rear-panel foot, right	396.4163
4		2	ZM Geräteverbinder Instrument link	806.1270
5		4	VS M 3x8 DIN 965	081.9384
6		1	MZ Haube, oben 4E 1/1 T570 Cover, top	806.4192
7		1	MZ Haube, unten 4E 1/1 T570 Cover, bottom	396.3821
9		4	VS DIN 965-M3x5-A4	088.4320
10		2	MZ Lasche Bracket	396.9407
11		2	MZ Gewindeleiste M3 Thread strip	396.9402
12		4	VS DIN 7985 M2x6 A4	081.8920
13		2	MF Gerätefuß, vorne Foot, front	396.4534
15		2	ZM Gerätefuß, hinten Foot, rear	396.4592
16		2	MF Fußeinsatz Foot insert	396.4611
17		4	WT Seitenfuß Side foot	396.4692
21		2	ZM Tragegriff T570 Carrying handle	396.3238
22		4	MF Abdeckung, Griffseite Cover, handle side	396.3338
23		4	VS M 4x10 DIN 965 A4	081.9478

Lfd. Nr.	Kenn-zeichen	Menge	Benennung/Beschreibung	Sachnummer
No.	Unit/ Comp.No.	Qty.	Designation	Stock No.
24		4	MR Griffbuchse Socket	396.3321
25		2	MF Seitenleiste T570 Side rail	396.3096
26		4	VS M 3x6 DIN 965	081.9378
27		5M	WG HF-Dichtung, oben prof. 1,6 SI RF seal with profile	396.1035
31		1	MZ Winkel Bracket	806.4757
32		10	VS M 3x6 DIN 965 A4	081.9378
33		1	ZM Deckel Cover	848.1256
35		13	VS M 3x6 DIN 7985 A4	081.9061
41		2	KS Frontgriff 4E Front handle	396.5282
42		4	VS DIN 965 M 4x8 A4 SW PA	396.1087
44		1	MZ Montageplatte Mounting plate	806.4834
45		6	VS Bew. Einpreßmutter M3 A1 Insert nut	547.8760
46		8	VS Einpreßsäule M 3x13 AL Insert collar	396.1158
47		6	VS M 3x8 DIN 965 A4	081.9384
48	W60	1	DX HF-Kabel W60 RF cable	808.6140
49	A111	1	ED Keyboard RF	806.5018.02 806.5018.03 806.5018.04
50		8	VS 3,2 DIN 125 A4	082.4670
51		8	VS 3 DIN 137 A2	005.0296
52		8	VS M 3x6 DIN 7985 A4	081.9061
53		1	KB Frontplatte (englisch) Front panel (English)	848.1104
54		4	VS Senkschraube M 1,6x3, lichtgrau Countersunk screw M1.6 x 3, light grey	396.1070

Lfd. Nr.	Kenn-zeichen	Menge	Benennung/Beschreibung	Sachnummer
No.	Unit/ Comp.No.	Qty.	Designation	Stock No.
55		1	OK Dreh. m. Mulde Rd 37 Rd 6 Spinwheel	078.1192
56		1	SS Führungskragen Guide frame	396.0897
80	A51	1	ED Reference 1	848.5000.02
81		4	VS M 3x10 DIN 7985 A4	081.9084

Die Teile Pos. 82 ... 88 sind in Pos. 80 enthalten!

Items 82 to 88 are included in item 80.

82		2	ZM Winkel Bracket	807.8233
83		4	OG Schwingmetall Rubber mounting	807.8240
84		4	MZ Scheibe Washer	807.8227
85		4	MB Topf Spacer	807.8210
86		8	VS 4 DIN 137 A2	005.0315
87		8	VS DIN 934 M4 A4	016.4400
88		4	VS DIN 125-A4,3-A4	082.4686
89		1	ZM Winkel Bracket	848.5097
90	A52	1	ED Reference 2	807.3019.02
91	A48	1	ED N Synthesizer	849.1014.02
92	A47	1	ED M Synthesizer	807.0010.02
93	A46	1	ED Summing Loop	807.4015.02
94	A45	1	ED Sweep Synthesizer	807.5011.02
95	A61	1	ED Frequency Processor	810.3400.02
96	A63	1	ED Interface	807.7014.02
97	A34	1	ED Preamplifier 3. IF	848.8009.02
98	A44	1	ED 2. LO / 3. Converter	848.3507.02
99	A43	1	ED YIG Pretune	848.6506.02
100	A42	1	ED YIG Synchronization	849.2010.02
101	A32	1	ED RF Module	848.9511.02

Pos. 110 ist in Pos. 95 enthalten!

Item 110 is included in item 95.

Lfd. Nr.	Kenn-zeichen	Menge	Benennung/Beschreibung	Sachnummer
No.	Unit/ Comp.No.	Qty.	Designation	Stock No.
110		2	KM Ausziehhebel, rot Lever, red	238.3709

Pos. 111 ist in Pos. 96 enthalten!

Item 111 is included in item 96.

111		2	KM Ausziehhebel, gelb Lever, yellow	238.3696

Die Teile (Kabel) Pos. 118, 122, 125, 126 sind in Pos. 80 enthalten!

Items (cables) 118, 122, 125, 126 are included in item 80.

115	W81	1	DX HF-Kabel W81 RF cable	808.6211
116	W83	1	DX HF-Kabel W83 RF cable	848.1804
117	W82	1	DX HF-Kabel W82 RF cable	808.6228
118	W31	1	DX HF-Kabel W31 RF cable	807.8179
119	W23	1	DX HF-Kabel W23 RF cable	808.6105
120	W84	1	DX HF-Kabel W84 RF cable	808.6240
121	W91	1	DX HF-Kabel W91 RF cable	808.6270
122	W35	1	DX HF-Kabel W35 RF cable	807.8191
123	W76	1	DX HF-Kabel W76 RF cable	848.1791
124	W77	1	DX HF-Kabel W77 RF cable	808.6470
125	W33	1	DX HF-Kabel W33 RF cable	807.8185
126	W36	1	DX HF-Kabel W36 RF cable	807.8204

Lfd. Nr.	Kenn-zeichen	Menge	Benennung/Beschreibung	Sachnummer
No.	Unit/ Comp.No.	Qty.	Designation	Stock No.
127	W40	1	DX HF-Kabel W40 RF cable	808.6128
128	W50	1	DX HF-Kabel W50 RF cable	808.6134
129	W30	1	DX HF-Kabel W30 RF cable	848.1779
130	W85	1	DX HF-Kabel W85 RF cable	848.1856
131	W95	1	DX HF-Kabel W95 RF cable	848.1827
132	W20	1	DX HF-Kabel W20 RF cable	848.1840

Pos. 133 ist in Pos. 100 enthalten!

Item 133 is included in item 100.

133	W16	1	DX HF-Kabel W16 RF cable	848.1833
134	W70	1	DX HF-Kabel W70 RF cable	808.6157
135	W73	1	DX HF-Kabel W73 RF cable	808.6186
136	W72	1	DX HF-Kabel W72 RF cable	848.1785
140			DX Verbindungseinheit X12 Connection unit	808.6551
150		4	VS M 3x10 DIN 7985 A4	081.9084
152		1	VS M 3x8 DIN 965	081.9384
153		1	ZM Montagewinkel 1 Mounting bracket	848.1227
154		2	VS M 3x8 DIN 965	081.9384
155		1	MZ Tellerfeder Spring	806.4686
156	W10	1	DX HF-Kabel W10 RF cable	808.6640
157		1	ZM Winkel Bracket	806.4270

Lfd. Nr.	Kenn-zeichen	Menge	Benennung/Beschreibung	Sachnummer
No.	Unit/ Comp.No.	Qty.	Designation	Stock No.
159		2	VS M 3x6 DIN 7985	081.9061
160	A41	1	ZE YIG Oscillator	848.7519
161		1	MZ Winkel Bracket	848.1210
162		6	DZ Durchf. Rd 4 x Rd 9,5x5,6 Feed-through	062.1130
163		6	VS 4,3 DIN 125 A4	082.4686
164		6	VN 4x5 DIN 7340	031.2792
165		6	VS 3 DIN 137 A2	005.0296
166		6	VS M 3x12 DIN 7985 A4	081.9090
167		6	KS 4 Kt. Mutt. M3/6x2 St Nut	085.6967
168	A31	1	ZE Eichleitung für FSB Attenuation set for FSB	849.3517
169		3	VS 3 DIN 137 A2	005.0296
170		3	VS M 3x8 DIN 7985	081.9078
200	A21	1	ED Power Supply RF A21	808.4819.02 808.4819.03
201	A22	1	ED Power Supply RF A22	808.4519.02 808.4519.03
202		1	MZ Koppelplatte Plate	806.8094
203		1	ZM LP-Befestigungswinkel 2 Mounting bracket	808.4090
204		1	ZM LP-Befestigungswinkel 1 Mounting bracket	808.4077
205	E1	1	ZE Lüfter Blower	808.4177
206		1	MZ Abdeckung Cover	808.4048
207		1	MZ Platte Plate	808.4325
208		1	ZM Trafo-Halterung Transformer support	808.4302
209	T1	1	ZM Transformator Transformer	808.4131

Lfd. Nr.	Kenn-zeichen	Menge	Benennung/Beschreibung	Sachnummer
No.	Unit/ Comp.No.	Qty.	Designation	Stock No.
210	X1	1	EN Netzfilter mit Spannungswähler AC filter with voltage selector	099.3313
211	S1	1	SK Wippschalter 2polig aus sw 2-pole rocker switch	553.2925
212		1	MZ Platte Plate	808.4083
213		1	VS DIN 965 M6x16-A4	071.3454
220		27	VS M 3x6 DIN 7985 A4	081.9061
221		3	VS M 3x8 DIN 7985 A4	081.9078
222		8	VS M 3x10 DIN 7985 A4	081.9084
223		20	VS M 3x10 DIN 965 A4	081.9390
224		15	VS 3 DIN 137 A2	005.0296
225		19	VS 3,2 DIN 125 A4	082.4670
226		3	VS 3,2 DIN 6797 A2	016.2820
227		5	KZ Käfig 9,3x7,2 Nirosta Insert	085.1936
228		1	VS M 4x8 DIN 7985 A4	081.9178
229		1	VS 4,3 DIN 125 A4	082.4686
230		1	VS 4,3 DIN 6797 A2	016.2837
231		1	FV Flachstecker Gr. 6,3 Tag	543.6705
233		1	VS M4 DIN 934 A4	016.4400
240		1	ZM Platte Plate	848.1327
241	E1	1	EV 18 V... 28 V 45L/ sec 5 W (Lüfter) Blower	531.7130
242		1	EV Lüftergitter Blower grid	852.0596
243	X132	1	FM Bul. 12 Norm. K. 5 Koax. Kabel Connector	070.0997
244	W133	1	DX Verbindungskabel W133 Cable	808.6011
245		4	FM Verriegelungs-Bolzen M. M3 Bolts	099.7783
246		5	FJ Einbaubuchse Syst. BNC BNC socket	099.9186

Lfd. Nr.	Kenn-zeichen	Menge	Benennung/Beschreibung	Sachnummer
No.	Unit/ Comp.No.	Qty.	Designation	Stock No.
247		4	VL Lötöse 18 x 10 Soldering tag	035.0813
248	W45	1	DX HF Kabel RF cable	808.6563
249		1	MZ Winkel Bracket	808.5515
250		35	VS M 3x8 DIN 965 A4	081.9384
251		24	VS M 3x6 DIN 7985 A4	081.9061
252		4	VS 3,2 DIN 125 A4	082.4670
253		17	VS M 3x6 DIN 965 A4	081.9378
254		3	VS M 3x12 DIN 965 A4	081.9403
255	W55	1	DX HF Kabel RF cable	808.6486
256	W88	1	DX HF Kabel RF cable	848.1810
257	W134	1	DX Buchseneinheit Socket assembly	848.6586
260		1	ZM Längswand Side panel	848.1110
261		1	ZM Querwand 5 Transverse panel 5	848.1162
262		1	ZM Querwand 3 Transverse panel 3	848.1140
263		1	ZM Längswand 2 Side panel 2	806.4411
264		1	ZM Querwand 2 Transverse panel 2	848.1133
265		1	ZM Querwand 4 Transverse panel 4	848.1156
266		1	ZM Querwand 1 Transverse panel 1	848.1127
267		1	ZM U-Winkel U bracket	806.4457
268		1	MZ Winkel 2 Bracket 2	848.1185
269		1	MZ Winkel 3 Bracket 3	848.1191

Lfd. Nr.	Kenn-zeichen	Menge	Benennung/Beschreibung	Sachnummer
No.	Unit/ Comp.No.	Qty.	Designation	Stock No.
270		2	MZ Winkel 1 Bracket 1	848.1179
271		1	MZ Platte Plate	806.4363
272		1	MZ Platte Plate	806.4357
273		28	WT Führungsleiste f. GS 3E GR Guide rail	396.7356
274		2	WT Führungsleiste f. GS 3E GE Guide rail	396.7362
275		2	WT Führungsleiste f. GS 3E RT Guide rail	396.7379
276		4	MG Rahmenschiene T570 Frame rail	396.2383
277		1	ZM Frontrahmen 4E 1/1 Front frame	396.2131
278		1	ZM Rückrahmen 4E 1/1 Rear frame	396.2277
280	A12	1	ED Motherboard	808.2016.03
281		1	MZ Schiene 2 Rail 2	806.4528
282		1	MZ Schiene 1 Rail 1	806.4511
283		1	MZ Schiene 3 Rail 3	806.4534
284		1	MZ Schiene 4 Rail 4	806.4540
285	W162	1	DX Flachbandkabel W162 Ribbon cable	808.6540
286		6	VS DIN 7985-M3x6-A4	081.9061
287		6	VS DIN 137-A3-A2	005.0296

Gehäuse

Aufbau

Der Aufbau besteht aus einer tragenden Aluminium-Druckguß-Rahmenkonstruktion mit gerätespezifischer Front-, Montage- und Rückplatte, die mit einer Ober- und Unterhaube (= Beplankung) ummantelt ist.

Rahmen und Beplankung:

Casing

Construction

The construction consists of a self-supporting aluminium-cast frame with front, mounting and rear panel, top and bottom covers (= panelling).

Frame and panelling:

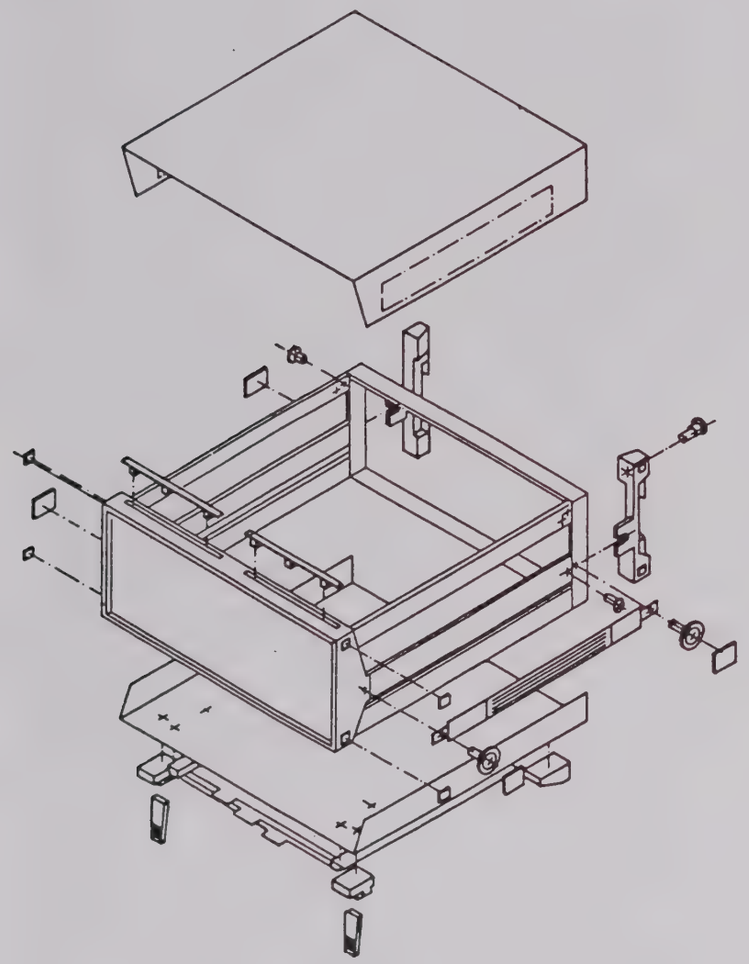

Dichtschnur (nur bei Geräten mit erhöhtem Schirmdämpfungsbedarf vorhanden) jeweils in die umlaufende Nut einlegen.

Insert the braided cord (provided only for instruments requiring a high degree of shielding) into the respective groove.

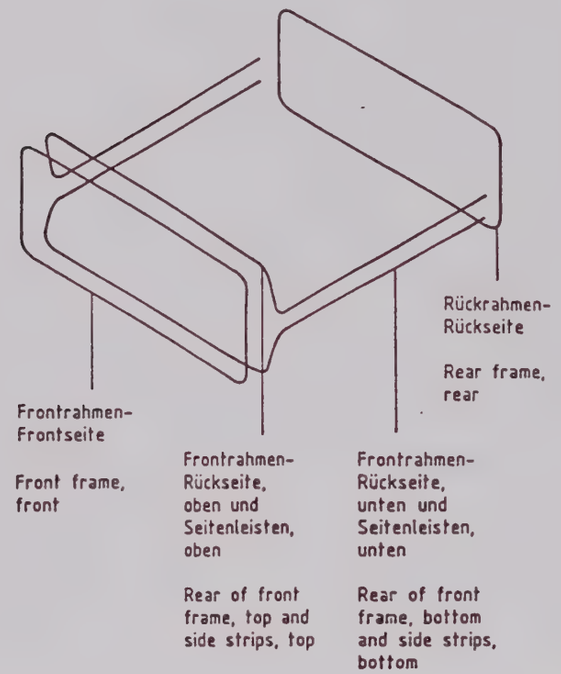

Öffnen und Schließen des Gehäuses

Die gute Schirmdämpfung der Kompaktbauweise 90 erfordert häufige Kontaktstellen und hohe Paßgenauigkeit. In Verbindung mit einem leichten Anlagedruck, der mit dem Festziehen der Rückwandfußschrauben erreicht wird, erhält man einen straffen Sitz der Ober- und Unterhaube auf dem Rahmen.

Zum *Öffnen* muß man die Rückwandfußverschraubung lösen und die Füße nach rückwärts abziehen (Schrauben bleiben im Fuß haften). Je nach Bedarf läßt sich nun Ober- bzw. Unterhaube ebenfalls nach rückwärts abnehmen. Sitzen die Hauben sehr fest, erleichtert man das Abziehen durch abwechselndes Hebeln in Pfeilrichtung mit einem Schraubenzieher an beiden Geräteseiten (siehe Bild).

Zum *Schließen* des Gehäuses werden erst die Frontkanten der Hauben in die umlaufende Nut des Frontrahmens und der Seitenleisten eingeführt und dann in die Erhöhungen am Rückrahmen eingerastet. Das Gerät ist wieder geschlossen, wenn die Rückwandfüße eingeschoben und die Schrauben festgezogen sind.

Opening and closing the cabinet

To obtain the high degree of shielding of design 90, many points of contact and accurate fitting are employed. When exerting a slight pressure by tightening the rear-panel feet, tight fitting of the top and bottom covers is ensured.

To *open* the cabinet, first undo the rear panel feet screws and withdraw the feet (captive screws). It is now possible to detach top and bottom cover if required. If the fitting of these cover plates is very tight, removal can be facilitated by alternately levering on both sides of the instrument using a screwdriver (see illustration).

To *close* the cabinet, insert the front edges of the covers into the groove of the front frame and the side strips and lock them into the catches on the rear frame. The cabinet is closed when the rear-panel feet are inserted and the screws tightened.

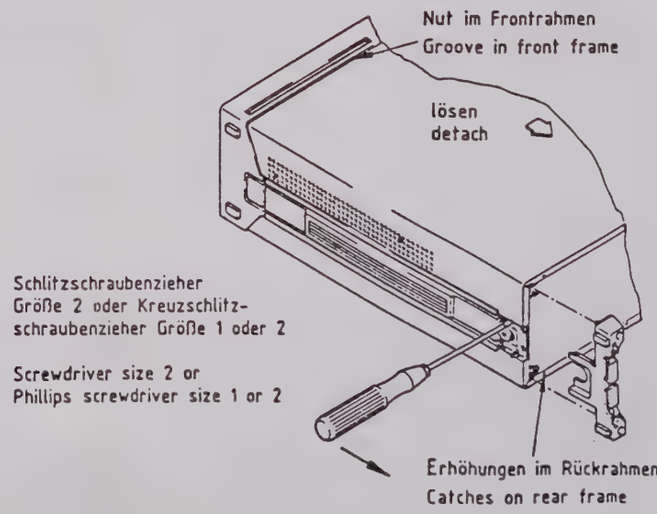

Ober- und Unterhaube werden durch die Rückwandfußverschraubung befestigt.

Top and bottom covers are fixed by screwing feet to rear panel.

FSB

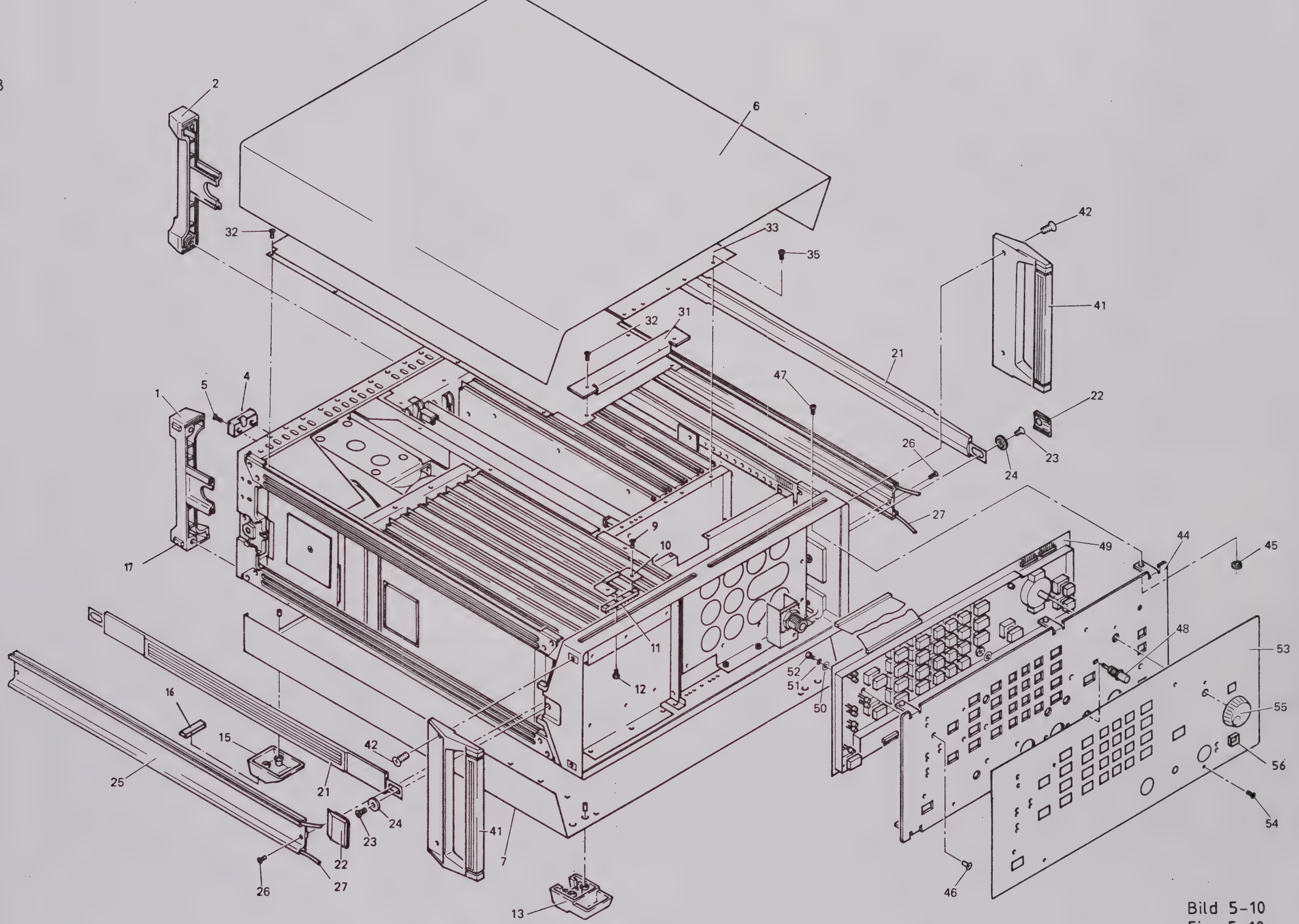

Bild 5-10
Fig. 5-10

FSB

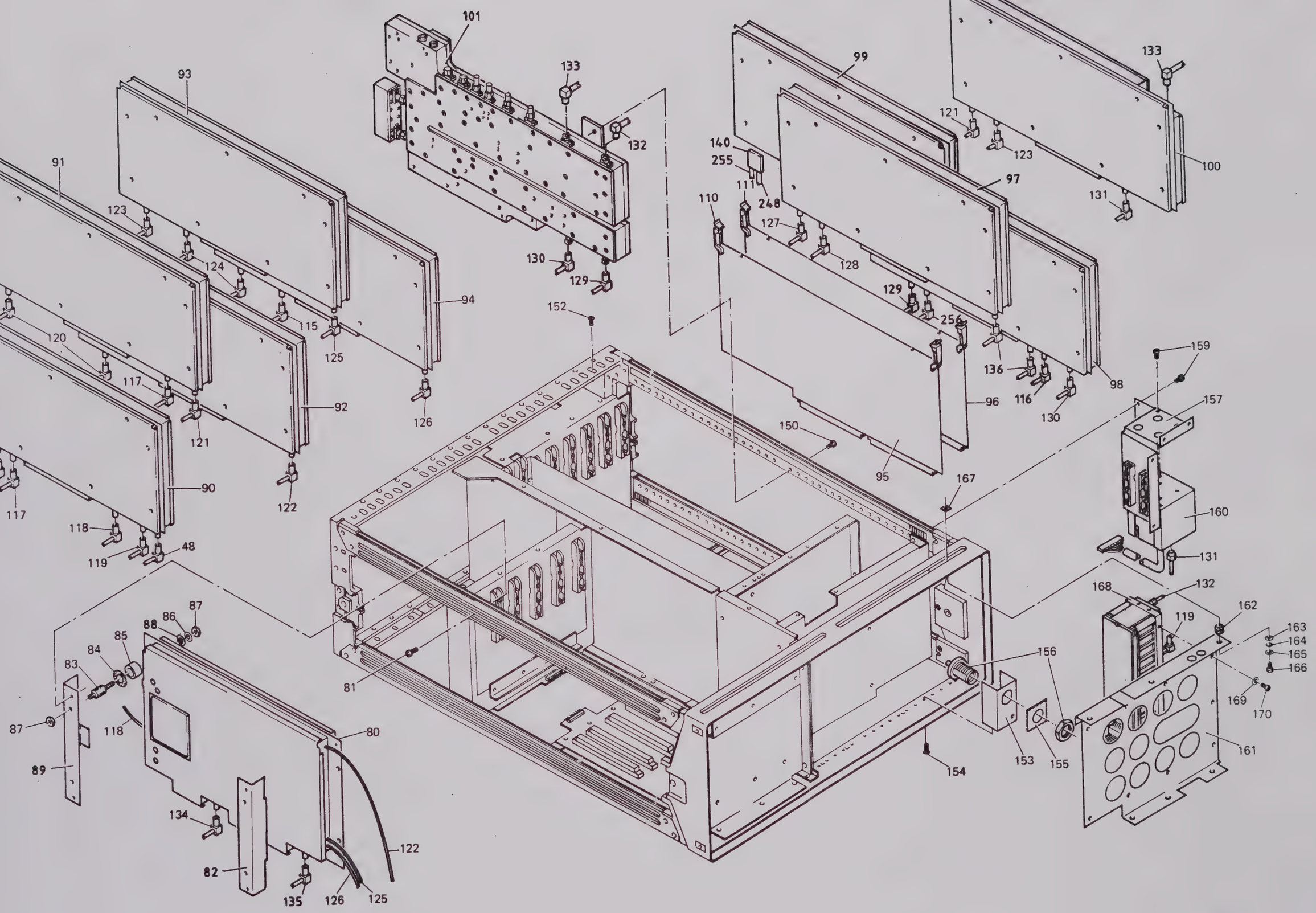

Bild 5-11
Fig. 5-11

FSB

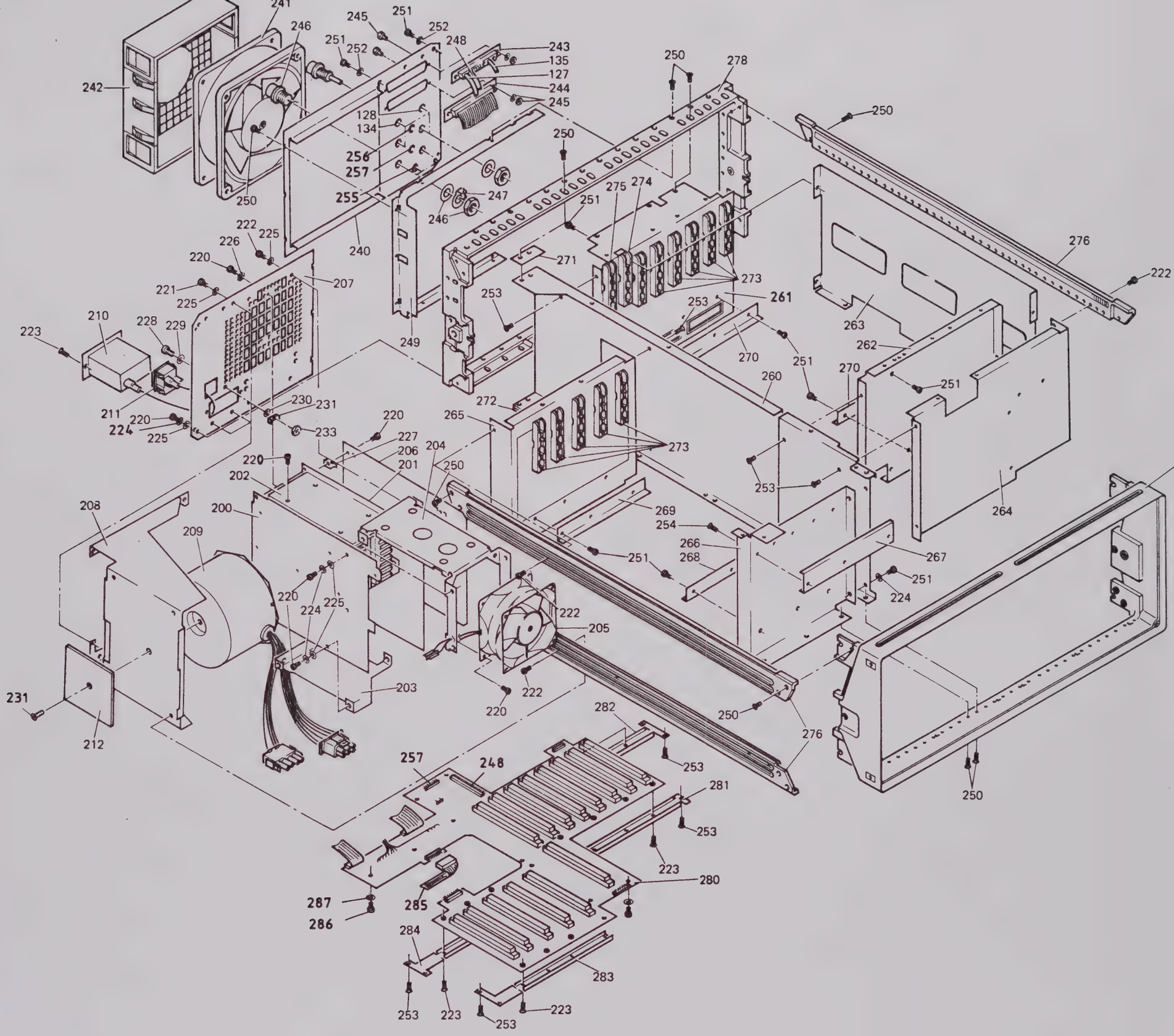

848.0550.52 D/E-1

5.102

Bild 5-12
Fig. 5-12

ROHDE&SCHWARZ

Schaltteillisten
Stromläufe
Bestückungspläne

Part lists
Circuit diagrams
Components plans

Listes des pièces détachées
Schémas de Circuit
Plans des composants

(R 29500 Bl 2)
895.1000 BL 2

ROHDE&SCHWARZ

R&S-Schlüsselliste
R&S key list
Liste des symboles de référence R&S

Die R&S-Schaltteillisten nennen in der Spalte "Benennung/Beschreibung" die technischen Daten der Bauelemente in Kurzform. Die Art des Bauelements (z.B. Schicht-, Draht-Widerstand usw.) beschreiben die 2 Kennbuchstaben vor der "Benennung" (evtl. auch vor der "Sachnummer"), die nachfolgend erklärt werden. In Ersatzteil-Bestellungen an R&S ist stets die Angabe der vollständigen Sachnummer erforderlich.

The R&S Parts Lists give the technical data of the components in short form in the column "Benennung/Beschreibung" (designation). The type of component (e.g. depos.-carbon resistor, wire-wound resistor etc.) is indicated by 2 identification letters before the designation, possibly also before the "Sachnummer" (order number), which are explained below. When ordering spare parts from R&S, the complete order number must always be specified.

La colonne «Désignation/description» des listes de pièces de R&S indique les caractéristiques des éléments sous forme abrégée. Le type d'élément (p. ex. résistance à couche, résistance bobinée etc. ...) est décrit par les deux lettres précédant la désignation (et éventuellement le numéro de référence), dont voici l'explication. Prière d'indiquer le numéro de référence («Sachnummer») complet dans toute commande de pièces de rechange.

Teile-familie	Art des Bauelementes	Parts family	Type of component	Famille	Type d'élément
A	**Aktive Bauelemente, Halbleiter**	**A**	**Active components, semiconductors**	**A**	**Composants actifs, semiconducteurs**
AD	Universaldiode, z.B. Gleichrichter, Sperrdiode	AD	General-purpose diode, e.g. rectifier, high-resistance diode	AD	Diode d'usage général, p.ex. redresseur, diode à haute résistance
AE	Spezialdiode, z.B. Tunnel-, Kapazitäts-, Zener-Diode	AE	Diode (special), e.g. tunnel diode, varactor, Zener diode	AE	Diode spéciale, p.ex. diode tunnel, varactor, diode Zener
AF	Fotohalbleiter, z.B. Foto-Diode, -Transistor, -Widerstand, Leuchtdiode	AF	Photo-semiconductor, e.g. resistor, diode, transistor, LED	AF	Semiconducteur photoélectrique, p.ex. diode, transistor, résistance photoél., DEL
AG	Leistungs-Gleichrichter, z.B. Thyristor, Triac, Selengleichrichter	AG	Power rectifier, e.g. thyristor, triac, selenium rectifier	AG	Redresseur de puissance, p.ex. thyristor, triac, redresseur, au sélénium
AK	Kleinsignal-Transistor	AK	Small-signal transistor	AK	Transistor faible puissance
AL	Leistungs-Transistor	AL	High-power transistor	AL	Transistor grande puissance
AM	Spezial-Transistor, z.B. FET, MOSFET	AM	Transistor (special), e.g. FET, MOS-FET	AM	Transistor spécial, p.ex. TEC, MOSTEC
AP	Peltier-, Hall-Element	AP	Peltier element, Hall element	AP	Element Peltier, élement Hall
AR	Röhre für Empfänger, Verstärker, Gleichrichter	AR	Valve for receiver, amplifier, rectifier	AR	Tube pour récepteur, amplificateur, redresseur
AS	Spezialröhre, z.B. Senderöhre, EW-Widerstand, Stabilisator	AS	Valve (special), e.g. for transmitter, baretter, ballast valve	AS	Tube (spécial), p.ex. pour émetteur, résistance fer-hydrogène, ballast
AT	Katodenstrahlröhre, z.B. Bildröhre, Ziffern-Anzeigeröhre	AT	Cathode ray tube, e.g. picture tube, digital indicator tube	AT	Tube à rayon cathodique, p.ex. tube à image, tube à affichage numérique
AZ	Zubehör für Halbleiter u. Röhren	AZ	Accessories for semiconductors and valves	AZ	Accessoires pour semiconducteurs et tubes
B	**Bausteine**	**B**	**PC boards, chips**	**B**	**Cartes imprimées, puces**
BC	Integr. Schaltkreis (Microcomp.)	BC	Integrated circuit (interface, A/D)	BC	Circuit intégré (microprocesseur)
BD	R&S-Dünnschicht- und Dickschichtschaltung	BD	R&S thinfilm or thickfilm circuit	BD	Circuit R&S à couche mince ou épaisse
BG	R&S-spezifische Gate-Arrays	BG	R&S gate arrays	BG	Circuits intégrés prédiffusés R&S
BJ	Integrierter Schaltkreis (Interface, A/D-Wandler)	BJ	Integrated circuit (interface, A/D converter)	BJ	Circuit intégré (interface, convertisseur A/N)
BL	Log. Schaltkreis z.B. DTL, TTL, HTL, ECL, C-MOS	BL	Logic circuit, e.g. DTL, TTL, HTL, ECL, C-MOS	BL	Circuit logique, p.ex. DTL, TTL, HTL, ECL, C-MOS
BM	Hybridbaustein, z.B. Mischer, Tuner, Modulator	BM	Hybrid chip, e.g. mixer, tuner, modulator	BM	Puce hybride, p.ex. mélangeur, tuner, modulateur
BO	Analogschaltkreis, z.B. Operationsverstärker	BO	Analog circuit, e.g. operational amplifier	BO	Circuit analogique. p.ex. amplificateur opérationnel
BP	Optoelektronischer Baustein, z.B. Anzeigeeinheit, Koppler	BP	Optoelectronic component, e.g. display, coupler	BP	Composant optoélectronique, p.ex. afficheur, coupleur
BS	Schalt- und Steuerbaustein, elektronischer Sensor	BS	Switching and control modul, electronic sensor	BS	Modul de commutation et de commande, sonde électronique
BV	Stromversorgung, Übersp.-Schutz	BV	Power pack, protective circuit	BV	Alimentation, protection surcharge
BZ	Zubehör	BZ	Accessories	BZ	Accessoires

Teile-familie	Art des Bauelementes	Parts family	Type of component	Famille	Type d'élément
C	**Kondensatoren**	**C**	**Capacitors**	**C**	**Condensateurs**
CB	Bypass-, Durchf.-Kondensator	CB	Bypass capacitor, feed-through capacitor	CB	Condensateur bypass, condensateur de traversée
CC	Keramischer Kondensator	CC	Ceramic capacitor	CC	Condensateur céramique
CD	Drehkondensator	CD	Variable capacitor	CD	Condensateur variable
CE	Elektrolytkondensator	CE	Electrolytic capacitor	CE	Condensateur électrolytique
CG	Glimmerkondensator	CG	Mica capacitor	CG	Condensateur au mica
CH	Sperrschichtkondensator	CH	Semiconductor capacitor	CH	Condensateur semiconducteur
CK	Kunstfolienkondensator	CK	Synthetic-foil capacitor	CK	Condensateur à feuille synthétique
CL	Ker. Hochsp.-Kondensator	CL	HV capacitor (ceramic)	CL	Condensateur HT céramique,
CM	Metallpapier-Kondensator	CM	MP capacitor	CM	Condensateur à papier métallisé
CN	Kondensatornetzwerk	CN	Capacitor network	CN	Réseau capacitif
CP	Papierkondensator	CP	Paper capacitor	CP	Condensateur au papier
CS	Störschutzkondensator	CS	Interference-suppression capacitor	CS	Condensateur anti-parasite
CT	Trimmkondensator	CT	Trimmer capacitor	CT	Condensateur ajustable
CV	Vakuum-Kondensator	CV	Vacuum capacitor	CV	Condensateur à vide
D	**Drähte, Leitungen**	**D**	**Wires, lines**	**D**	**Fils, lignes**
DD	Schalt- und Wickeldraht	DD	Hook-up or winding wire	DD	Fil de câblage, fil de bobinage
DF	Flachleitung, Litze	DF	Flat multiple line, stranded wire	DF	Ligne plate, ligne torsadée
DG	Abgeschirmte Leitung	DG	Shielded line	DG	Ligne blindé
DH	Koaxialkabel	DH	Coaxial line	DH	Ligne coaxiale
DJ	Isolierschläuche, Schrumpfschläuche, Wellrohre, Schutzschläuche	DJ	Insulating sheaths, shrink-on sleeves, corrugated tubes, protective tubes	DJ	Gaines isolantes, gaines thermorétractables tubes ondulés, gaines protectrices
DL	HF-Litzen	DL	RF stranded wires	DL	Lignes torsadées RF
DM	Schaltlitzen (mehrdrähtige Leiter)	DM	Multi-conductor wires	DM	Lignes torsadées (multiconducteurs)
DN	Antenne	DN	Antenna	DN	Antenne
DO	Lichtleiter (optisch)	DO	Optical waveguides	DO	Guides d'onde optiques
DP	Leiterplatten (unbestückt)	DP	Printed circuit boards (bare)	DP	Cartes imprimées (non équipées)
DQ	Multilayer (unbestückt)	DQ	Multilayer boards (bare)	DQ	Cartes multicouche (non équipées)
DS	Anschlußkabel (mehradrig)	DS	Connecting cable, multicore	DS	Câble de connexion (multiconducteur)
DU	Substratplatten für Dickschichtschaltungen	DU	Substrate boards for thickfilm circuits	DU	Cartes à substrat pour circuits à couche épaisse
DW	Festmantelkabel	DW	Rigid cables	DW	Câbles rigides
E	**Elektrische Teile**	**E**	**Electric parts**	**E**	**Organes électriques**
EB	Blei-, NC-Akku, Batterie	EB	Lead or alkaline accumulator, battery	EB	Accumulateur Pb/NC, batterie
ED	Gedruckte Schaltung (bestückte Leiterplatte), nicht steckbar	ED	Printed circuits (assembled), non-pluggable	ED	Circuits imprimés (équipés) non enfichables
EE	Gedruckte Schaltung (bestückte Leiterplatte), steckbar	EE	Printed circuits (assembled), pluggable	EE	Circuits imprimés (équipés) enfichables
EF	Glühlampe, Leuchte	EF	Incandescent lamp, pilot lamp	EF	Lampe à incandescence, voyant
EG	Glimmlampe, Entladungslampe	EG	Glow lamp, discharge lamp	EG	Lampe à luminescence lampe à décharge
EK	Kontakt-Streifen, -Feder	EK	Contact clip, contact spring	EK	Lampe de contact, ressort de contact
EL	Lautsprecher, Kopfhörer, Mikrofon	EL	Loudspeaker, headphones, microphone	EL	Haut-parleur, casque, microphone
EM	Motor, Hubmagnet, Drehfeldsystem	EM	Motor, lifting magnet, synchro system	EM	Moteur, électro-aimant de levage, système synchro
EO	Oszillator, z.B. Quarzoszillator	EO	Oscillator, e.g. crystal oscillator	EO	Oscillateur p.ex. oscillateur à quartz
EP	Tief-, Band-, Hochpaß, Bandsperre, Diskriminator	EP	Lowpass, bandpass, highpass filter, band-stop filter, discriminator	EP	Filtre passe-bas, passe-bande, passe-haut, suppression de bande, discriminateur
EQ	Schwing-, Filter-Quarz	EQ	Oscillator or filter crystal	EQ	Quartz oscillateur, quartz de filtre
ER	Resonator, piezoelektr./magnetostriktiv	ER	Resonator, piezoelectric/ magnetostrictive	ER	Résonateur piézo-électrique/ magneto-strictif
ES	Passive SHF-Bauteile	ES	Passive SHF-components	ES	Composant SHF passif
ET	Thermostat	ET	Thermostat	ET	Thermostat
EV	Lüfter, Gebläse	EV	Ventilator, blower	EV	Ventilateur, soufflerie

R&S-Schlüsselliste
R&S key list
Liste des symboles de référence R&S

ROHDE&SCHWARZ

Teile-familie	Art des Bauelementes	Parts family	Type of component	Famil-le	Type d'élément
F	**Fassungen, Steckverbindungen**	**F**	**Sockets, connectors**	**F**	**Douilles, connecteurs**
FG	Koax-Umrüstsatz	FG	Coaxial screw-in assembly	FG	Ensemble vissable coaxial
FH	Koax-Übergang auf Fremdsystem	FH	Coaxial adapter	FH	Adaptateur coaxial
FJ	BNC-Systemteil	FJ	BNC screw-in assembly	FJ	Ensemble vissable BNC
FK	Koaxial-UHF-Systemteil	FK	Coaxial UHF screw-in assembly	FK	Ensemble vissable coaxial UHF
FM	Mehrfachstecker, Buchsenleiste	FM	Multipoint connector	FM	Connecteur multiple
FN	Netz-Steckverbindung	FN	AC-supply connector	FN	Connecteur secteur
FO	Runde Mehrfach-Steckverbindung	FO	Round multipoint connector	FO	Connecteur multipoles rond
FP	Druckschalt-Steckverbindung	FP	Multipoint connector for PC boards	FP	Connecteur multipoles pour cartes imprimées
FR	Fassung für Lampe, Sicherung, usw.	FR	Socket for lamp, fuse, etc.	FR	Douille pour lampe, fusible etc. . . .
FT	Schwachstrom-Steckverbindung	FT	LV plug and socket	FT	Connecteur pour faible courant
FU	Hochspannungs-Steckverbindung	FU	HV plug and socket	FU	Connecteur pour haute tension
FV	Verbinder (z.B. AMP)	FV	Push-on connector	FV	Connecteur à enfichage
FZ	Zubehör für koax. Bauelemente	FZ	Accessories for coax. components	FZ	Accessoires pour composants coax.
H	**Software**	**H**	**Software**	**H**	**Logiciel**
HP	Software-Komponenten und Software-Module	HP	Rights to software components and software modules	HP	Droits d'utilisation de composants et modules logiciel
HS	Auf Informationsträger geladene Software	HS	Software data media	HS	Logiciel sur support d'information
J	**Meßinstrumente**	**J**	**Indicators**	**J**	**Indicateurs**
JD	Drehspul-Anzeigeinstrument	JD	Moving-coil meter	JD	Galvanomètre à cadre mobile
JE	Dreheisen-Anzeigeinstrument	JE	Moving-iron meter	JE	Galvanomètre à fer mobile
JF	Frequenzmesser	JF	Frequency meter	JF	Fréquencemètre
JG	Drehspulinstrument mit Gleichrichter	JG	Moving-coil meter with rectifier	JG	Galvanomètre à cadre mobile avec redresseur
JH	Betriebsstundenzähler	JH	Operating-hours counter	JH	Compteur d'heures de fonctionnement
JJ	Impulszähler	JJ	Pulse counter	JJ	Compteur d'impulsions
JK	Kleinst-Instrument, z.B. Abstimmanzeiger	JK	Mini-instrument, e.g. tuning indicator	JK	Petit indicateur, p.ex. indicateur d'accord
JM	Mechanisches Zählwerk	JM	Mechanical counter	JM	Compteur mécanique
JP	Projektions-Instrument (Leuchtziffer)	JP	Digital display	JP	Afficheur numérique
JQ	Quotientenmesser (Kreuzspulinstrum.)	JQ	Ratiometer (cross coul)	JQ	Quotientmètre (à cadres croisés)
JU	Uhrwerk	JU	Clockwork	JU	Mouvement d'horlogerie
JW	Elektrodyn. Anzeigeinstrument	JW	Electrodynamic meter	JW	Instrument électrodynamique
L	**Induktivitäten, Magnetik**	**L**	**Inductors, magnetic components**	**L**	**Composants inductifs et magnétiques**
LB	Blech- und Schnittbandkern mit Zubehör	LB	Laminated and C-cores with accessories	LB	Noyaux feuilletés et noyaux de type C, avec accessoires
LC	Keramische Spule	LC	Ceramic coil	LC	Bobine céramique
LD	Netz-, HF-Drossel, Df-Filter	LD	Choke, lead-through filter	LD	Self de choc, filtre dê traversée
LE	Einzelkreis, Bandfilter	LE	Single tuned circuit, bandpass filter	LE	Circuit accordé, filtre passe-bande
LF	Ferritkern mit Zubehör	LF	Ferrite cores with accessories	LF	Noyaux en ferrite avec accessoires
LK	Karbonyleisenkern und elektrischer Kupferkern mit Zubehör	LK	Iron carbonyl slugs and copper slugs with accessories	LK	Noyaux en fer carbonyle et en cuivre, avec accessoires
LL	Luftspule	LL	Air-core coils	LL	Bobines à air
LM	Magnetband und -platte	LM	Magnetic tapes and disks	LM	Bandes et disques magnétiques
LS	Schirmbecher	LS	Screening cans	LS	Boîtiers de blindage
LT	Netztransformator	LT	Power transformer	LT	Transformateur secteur
LU	NF-Übertrager	LU	AF transformer	LU	Transformateur BF
LV	Variometer	LV	Variometer	LV	Variomètre
LW	Wickelkörper, allgemein	LW	Coil formers, general	LW	Carcasses de bobine, en général

Teile-familie	Art des Bauelementes	Parts family	Type of component	Famille	Type d'élément
R	**Widerstände**	**R**	**Resistors**	**R**	**Résistances**
RD	Drahtwiderstand	RD	Wire-wound resistor	RD	Résistance bobinée
RF	Kohleschicht-Widerstand	RF	Carbon-film resistor	RF	Résistance à couche de carbone
RG	Metallglasur-Widerstand	RG	Metal-coated resistor	RG	Résistance à couche métallique
RJ	Metalloxyd-Widerstand	RJ	Metal-oxide resistor	RJ	Résistance à oxyde métallique
RK	Kaltleiter, Heißleiter, Varistor	RK	PTC, NTC resistors, varistors	RK	Résistances CPT, CNT, varistors
RL	Metallfilm-Widerstand	RL	Metal-film resistor	RL	Résistance à film métallique
RN	Widerstandsnetzwerk	RN	Resistor network	RN	Réseau de résistance
RR	Draht-Potentiometer	RR	Wire-wound potentiometer	RR	Potentiomètre bobiné
RS	Schicht-Potentiometer	RS	Carbon-film potentiometer	RS	Potentiomètre à couche
RT	Dämpfungsglied, Abschlußwiderstand	RT	Attenuator, termination	RT	Atténuateur, charge
RV	Drahtwiderstand mit Abgriff	RV	Wire-wound resistor, tapped	RV	Résistance bobinée à prise
RW	Wendelpotentiometer	RW	Helical potentiometer	RW	Potentiomètre hélicoidal
S	**Schalter, Relais, Sicherungen**	**S**	**Switches, relays, fuses**	**S**	**Commutateurs, relais, fusibles**
SB	Drucktastenschalter	SB	Pushbutton switch	SB	Commutateur à touche
SD	Drehschalter	SD	Rotary switch	SD	Commutateur rotatif
SF	Kontaktfedersatz	SF	Spring contact assembly	SF	Jeu de ressorts de contact
SH	HF-Koaxialschalter, -Relais, -Teiler	SH	Coaxial RF switch, RF relay, RF attenuator	SH	Commutateur RF coaxial, relais RF, atténuateur RF
SK	Kipp-, Wipp- und Schiebeschalter	SK	Toggle switch, slide switch	SK	Commutateur à bascule, à glissière
SL	Leistungsschalter Netz/HF	SL	AC supply switch, high-power RF switch	SL	Commutateur secteur, de puissance RF
SM	Mikroschalter	SM	Microswitch	SM	Microrupteur
SN	Elektromagnet, Relais	SN	Electromagnetic relay	SN	Relais électromagnétique
SP	Leistungsrelais, Luftschütz	SP	Power relay, air-type contactor	SP	Relais de puissance, contacteur à air
SR	Reedrelais	SR	Reed relay	SR	Relais reed
SS	Sicherung, Schutzschalter	SS	Fuse, automatic cut-out	SS	Fusible, coupe-circuit automatique
ST	Thermoschalter	ST	Thermal circuit breaker	ST	Disjoncteur thermique
SU	Überspannungs-Ableiter	SU	Arrester	SU	Eclateur
SW	Wechselrichter, Näherungsschalter	SW	Inverter (DC-AC), proximity switch	SW	Inverseur (DC-AC), commutateur de proximité
SZ	Zeitschalter	SZ	Time switch	SZ	Interrupteur horaire
V	**Verbindungselemente**	**V**	**Connecting elements**	**V**	**Eléments de raccordement**
VK	Klemme, Klemmleiste	VK	Clamp, terminal strip	VK	Pince, réglette à bornes
VL	Lötöse, Stützpunkt	VL	Soldering lug	VL	Cosse à souder
VS	Schraube, Mutter, Scheibe	VS	Screw, nut, washer	VS	Vis, écrou, disque

Farbcode für Widerstände und Kondensatoren

Anmerkung:
Die Wertangabe der weitgehend miniaturisierten Bauelemente erfolgt überwiegend durch Farbkennzeichnungen, deren Bedeutung der nachfolgenden Tabelle entnommen werden kann.

Hinweis:
Im Zuge des technischen Fortschrittes setzt R&S zunehmend Metallschichtwiderstände mit 1% Toleranz anstelle von Kohleschichtwiderständen mit 5% Toleranz ein. Metallschichtwiderstände können sich dabei an Stellen befinden, an denen gemäß Schaltteilliste Kohleschichtwiderstände vorgesehen sind. Etwaige geringfügige Differenzen der Nennwerte zwischen Stromlaufplan, Schaltteilliste und Gerät liegen im zulässigen Toleranzbereich.

Colour code for resistors and capacitors

Note:
The electrical values of the largely miniaturized components are mainly identified by a colour code, the meaning of which can be taken from the table below.

N. B.:
Following the state of the art R&S makes increasing use of metal-film resistors (1% tolerance) instead of carbon-film resistors (5% tolerance). Metal-film resistors may have been employed where carbon-film resistors are specified in the parts list. Any slight differences of nominal values between circuit diagram, parts list and equipment are within tolerance.

Code couleur pour résistances et condensateurs

Remarque:
Les valeurs électriques des composants fort miniaturisés sont indiquées dans la plupart des cas par un code couleur dont voici l'explication.

N. B.:
Suivant le progres technique R&S utilise de plus en plus des résistances à film métallique (tolérance 1%) au lieu des résistances à couche de carbone (tolérance 5%). Des résistances à film metallique peuvent se trouver en des points où des types à couche de carbone figurent dans la liste des composants. Les différences minimes des valeurs nominales existant eventuellement entre le schéma de circuit, la liste des composants et l'appareil sont dans la marge de tolérance.

Farbe/Colour/Couleur	A	B	C	D
Schwarz/Black/Noir	—	0		
Braun/Brown/Marron	1	1	0	± 1%
Rot/Red/Rouge	2	2	00	± 2%
Orange/Orangé	3	3	000	
Gelb/Yellow/Jaune	4	4	0000	
Grün/Green/Vert	5	5	00000	± 0,5%
Blau/Blue/Bleu	6	6	000000	
Violett/Violet	7	7	—	± 0,1%
Grau/Gray/Gris	8	8	—	
Weiß/White/Blanc	9	9	—	
Gold/Doré	—	—	—	± 5%
Silber/Silver/Argenté	—	—	—	± 10%
Ohne Farbe/No colour/ Pas de couleur	—	—	—	± 20%

Anordnungsbeispiele für Examples for / Exemple pour

Widerstände (R) Resistors (R) Résistance (R)	Kondensat. (C) Capacitors (C) Condensateur (C)
	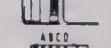

1) Toleranzring, hier nicht spezifiziert.
1) Tolerance ring, here not specified.
1) Anneau de tolérance, ne pas spécifié ici.

Definition* / Définition *

Kennzeichen A (Bauteilfarbe/1. Farbring) = 1. Zahl
Kennzeichen B (Bauteilende/2. Farbring) = 2. Zahl
Kennzeichen C (Punkt/3. Farbring) - 3. Zahl = Zahl der Nullen
Kennzeichen D (Punkt/4. Farbring) = Toleranz des Nennwerts in %
(Fehlendes Kennzeichen fur D bedeutet ±20%)
Das Fehlen eines Kennzeichens bedeutet, daß die Farbe des Bauteilkörpers die Wertangabe darstellt.

Marking A (body colour or first coloured ring) = 1st digit
Marking B (body end or second coloured ring) = 2nd digit
Marking C (dot or third coloured ring) = number of zeroes
Marking D (dot or fourth coloured ring) = tolerance on nominal value in %
(with no D marking tolerance ± 20%)
The absence of a marking signifies that the body colour gives the corresponding information

Repérage A (couleur du corps ou 1er anneau) = 1er chiffre
Reperage B (bout du corps ou 2e anneau) = 2e chiffre
Repérage C (point ou 3e anneau) = nombre de zeros.
Repérage D (point ou 4e anneau) = tolérance en % de la valeur nominale
(L'absence du repérage D signifie ± 20%)
L'absence de tout repérage signifie que la couleur du corps du composant représente la valeur correspondante.

* Siehe auch DIN 41 429 und DIN 40 825
* see also IEC publication 62-1962 and 62-1968
* Voir aussi DIN 41 429 et DIN 40 825

Kennz. Comp.No.	Benennung Designation	Sachnummer Stock No.	Hersteller Manufacturer	Bezeichnung Designation	enthalten in contained in
A2	ZE RF-POWER SUPPLY HIERZU STROML. 808.4019 S SEE CIRC.DIAGR.808.4019 S	808.4019.03			848.1004.01
A11	ZM FRONTPLATTENEINHEIT FRONT PANEL UNIT NUR VAR/ONLY MOD: 02 HIERZU STROML.804.8126 S SEE CIRC.DIAGR.804.8126 S	806.4811.02			848.0708.01
A12	ED MOTHERBOARD MOTHERBOARD HIERZU STROML. 808.2016 S SEE CIRC.DIAGR.808.2016 S	808.2016.02			848.1004.01
A13	ZM RUECKWAND	848.1304.02			848.0708.01
A31	ZE EICHLEITUNG FUER FSB HIERZU STROML. 849.3517 S SEE CIRC.DIAGR.849.3517 S	849.3517			848.1004.01
A32	BD RF-MODULE RF MODULE HIERZU STROML. 848.9511 S SEE CIRC.DIAGR.848.9511 S	848.9511.02			848.1004.01
A34	EE PREAMPLIFIER 3RD/F HIERZU STROML. 848.8009 S SEE CIRC.DIAGR.848.8009 S	848.8009.02			848.1004.01
A41	ZE YIG-OSZILLATOR	848.7519.03			848.1004.01
A42	EE YIG-SYNCHRONISATION YIG SYNCRONIZATION HIERZU STROML. 849.2010 S SEE CIRC.DIAGR.849.2010 S	849.2010.02			848.1004.01
A43	EE YIG PRETUNE HIERZU STROML. 848.6506 S SEE CIRC.DIAGR.848.6506 S	848.6506.03			848.1004.01
A44	EE 2ND LO/3RD CONVERTER HIERZU STROML. 848.3507 S SEE CIRC.DIAGR.848.3507 S	848.3507.02			848.1004.01
A45	EE SWEEP SYNTHESIZER SWEEPT SYNTHESIZER HIERZU STROML. 807.5011 S SEE CIRC.DIAGR.807.5011 S	807.5011.02			848.1004.01
A46	EE SUMMING LOOP SUMMING LOOP HIERZU STROML. 807.4015 S SEE CIRC.DIAGR.807.4015 S	807.4015.02			848.1004.01
A47	EE M-SINTHESYZER M-SYNTHESIZER HIERZU STROML. 807.0010 S SEE CIRC.DIAGR.807.0010 S	807.0010.02			848.1004.01
A48	EE N-SYNTHESIZER HIERZU STROML. 849.1014 S SEE CIRC.DIAGR.849.1014 S	849.1014.02			848.1004.01
A51	ED REFERENCE 1 REFERENCE 1 HIERZU STROML. 848.5000 S SEE CIRC.DIAGR.848.5000 S	848.5000.02			848.1004.01
A52	EE REFERENCE 2 REFERENCE 2 HIERZU STROML. 848.2000 S SEE CIRC.DIAGR.848.2000 S	807.3019.02			848.1004.01
A61	EE FREQUENCY PROCESSOR FREQUENCY PROCESSOR HIERZU STROML. 807.6018 S SEE CIRC.DIAGR.807.6018 S	810.3400.02			848.1004.01
A63	EE INTERFACE INTERFACE HIERZU STROML. 807.7014 S SEE CIRC.DIAGR.807.7014 S	807.7014.02			848.1004.01
D10	BC 27C256-25Z 32KX8 EPROM EPROM	BC 651.6701	FUIJTSU	MBM27C256-25Z	810.3522
D11	BC 27C256-25Z 32KX8 EPROM EPROM	BC 651.6701	FUIJTSU	MBM27C256-25Z	810.3522
W10	DX HF-KABEL W10 RF CABLE	808.6640			848.1756 F
W10	DX HF-KABEL W10 RF CABLE	808.6640			848.1879
W16	DX HF-KABEL W16	848.1833			848.1879
W20	DX HF-KABEL W20	848.1840			848.1879

Für diese Unterlage behalten wir uns alle Rechte vor

Kennz. Comp.No.	Benennung Designation	Sachnummer Stock No.	Hersteller Manufacturer	Bezeichnung Designation	enthalten in contained in
W23	DX HF-KABEL W23 RF CABLE	808.6105			848.1756
W30	DX HF-KABEL W30	848.1779			848.1756
W72	DX HF-KABEL W72	848.1785			848.1756
W76	DX HF-KABEL W76	848.1791			848.1756
W77	DX HF-KABEL W77 RF CABLE W77	808.6470			848.1756
W81	DX HF-KABEL W81 RF CABLE	808.6211			848.1756
W82	DX HF-KABEL W82 RF CABLE	808.6228			848.1756
W83	DX HF-KABEL W83	848.1804			848.1756
W84	DX HF-KABEL W84 RF CABLE	808.6240			848.1756
W85	DX HF-KABEL W85	848.1856			848.1879
W91	DX HF-KABEL W91 RF CABLE	808.6270			848.1756
W95	DX HF-KABEL W95	848.1827			848.7519.01
X132	FM BUL.12 NORM.K.5KOAXK CONNECTOR	FM 070.0997	CANNON	DCM-17W5S	848.1304.01
					- ENDE -

Kennz. Comp.No.	Benennung Designation	Sachnummer Stock No.	Hersteller Manufacturer	Bezeichnung Designation	enthalten in contained in
.	ZUGEH.STROML./CIRC.DIAGR. 808.2016 S				
P1	VL STECKLOETOESE 7,5X1,1 PLUG-IN SOLDERING LUG	VL 078.2747	-	R&S-ZCHNG.078.2747	
P2	VL STECKLOETOESE 7,5X1,1 PLUG-IN SOLDERING LUG	VL 078.2747	-	R&S-ZCHNG.078.2747	
X34	FP IND.BUCHSENLEISTE 96P FEMALE MULTIPOINT CONNECT	FP 272.9129	PANDUIT	100-096-433/999	
X42	FP IND.BUCHSENLEISTE 96P	FP 272.9129	PANDUIT	100-096-433/999	
..48	FEMALE MULTIPOINT CONNECT				
X52	FP IND.BUCHSENLEISTE 96P FEMALE MULTIPOINT CONNECT	FP 272.9129	PANDUIT	100-096-433/999	
X61	FP IND.BUCHSENLEISTE 96P FEMALE MULTIPOINT CONNECT	FP 272.9129	PANDUIT	100-096-433/999	
X62	FP IND.BUCHSENLEISTE 96P FEMALE MULTIPOINT CONNECT	FP 272.9129	PANDUIT	100-096-433/999	
X63	FP IND.BUCHSENLEISTE 96P FEMALE MULTIPOINT CONNECT	FP 272.9129	PANDUIT	100-096-433/999	
X96	FP IND.BUCHSENLEISTE 96P FEMALE MULTIPOINT CONNECT	FP 272.9129	PANDUIT	100-096-433/999	
X97	FP IND.BUCHSENLEISTE 96P FEMALE MULTIPOINT CONNECT	FP 272.9129	PANDUIT	100-096-433/999	
X111	FP LP-STECKER 2REIH.16W ANGLE PIN CONNECTOR	806.5053			
X132	FP LP-STECKER 2REIH.12W	808.2039			
X133	FP LP-STECKER 2REIH.40W	808.2045			
X134	FP LP-STECKER 2REIH.16W ANGLE PIN CONNECTOR	806.5053			
X135	FP WINKELSTECKERLEIST.36P ANGLE PIN CONNECTOR	FP 243.3578	BINDER	742-5-11-0187-00-36	
X211	DX VERBINDUNGSEINH.X211	808.4902			
X212	DX BUCHSENEINHEIT X212	808.4883			
X221	DX VERBINDUNGSEINH. X221	808.4602			
X222	DX BUCHSENEINHEIT X222	808.4577			
X321	FP WINKELSTECKERLEIST.36P ANGLE PIN CONNECTOR	FP 243.3578	BINDER	742-5-11-0187-00-36	
X511	FP LP-STECKER 2REIH.20W PCB CONNECTOR,20 CONTACT	805.8936			
X900	FP LP-STECKER 2REIH. 20G PIN CONNECTOR	808.3258			
					- ENDE -

Für diese Unterlage behalten wir uns alle Rechte vor

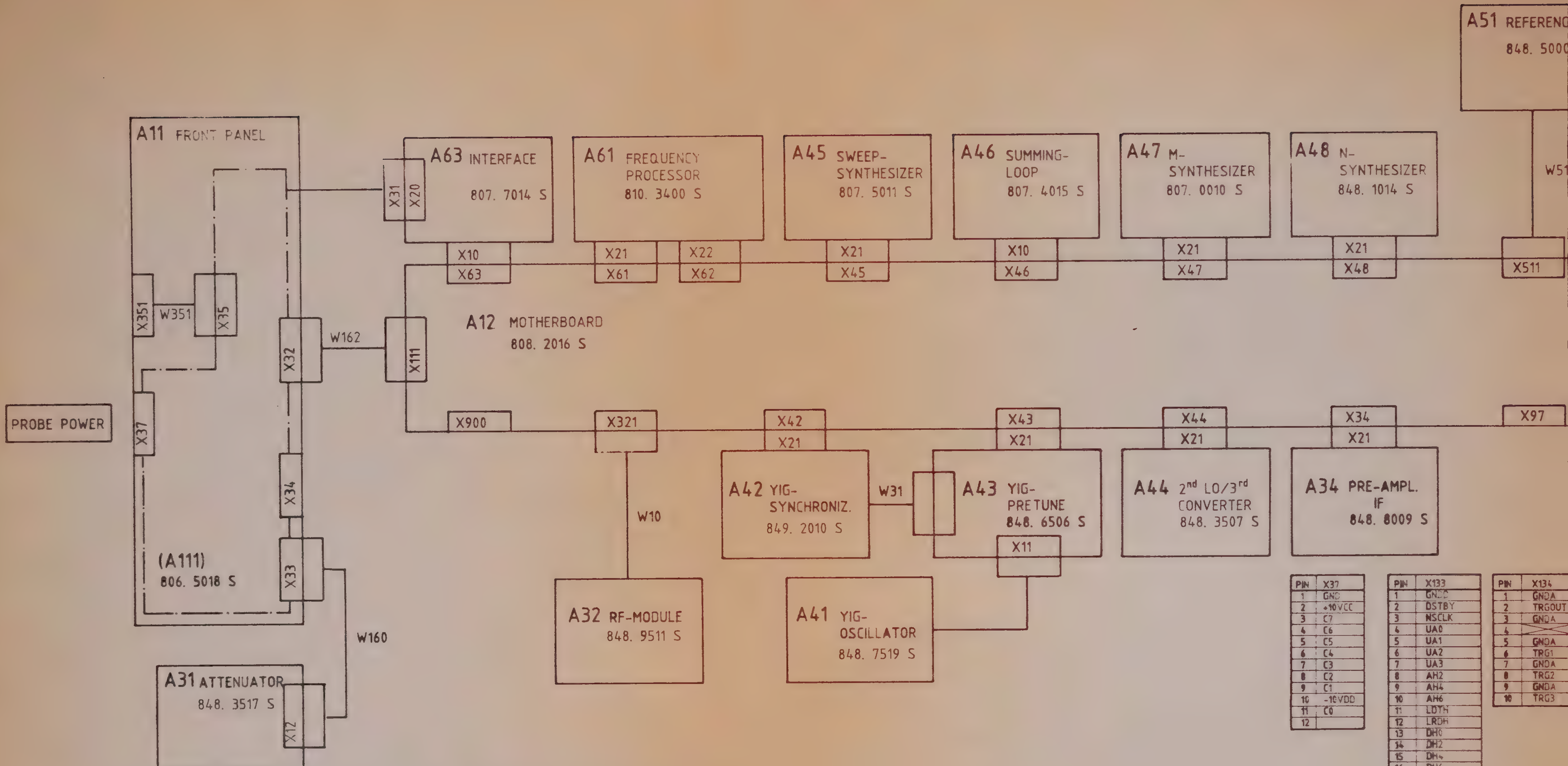

PIN	X37
1	GND
2	+10VCC
3	C7
4	C6
5	C5
6	C4
7	C3
8	C2
9	C1
10	-10VDD
11	C0
12	

PIN	X133
1	GNDD
2	DSTBY
3	NSCLK
4	UA0
5	UA1
6	UA2
7	UA3
8	AH2
9	AH4
10	AH6
11	LDTH
12	LRDH
13	DH0
14	DH2
15	DH4
16	DH6
17	L INT 1
18	RESOUT
19	GNDD
20	GNDD
21	
22	FWRDWN
23	PRESET
24	SWPTRG
25	FRQSTP
26	AH1
27	AH3
28	AH5
29	LBS1
30	LBS2
31	LWRH
32	DH1
33	DH3
34	DH5
35	L INTA1
36	GNDD

PIN	X134
1	GNDA
2	TRGOUT
3	GNDA
4	
5	GNDA
6	TRG1
7	GNDA
8	TRG2
9	GNDA
10	TRG3

ROHDE & SCHWARZ

B		07.88	HW					1KEF	Tag	Name
								Bearb	03.88	HW
								Gepr		

... Unterlage behalten ... alle Rechte vor

...chn.-Nr 848 ...50 Bl.1

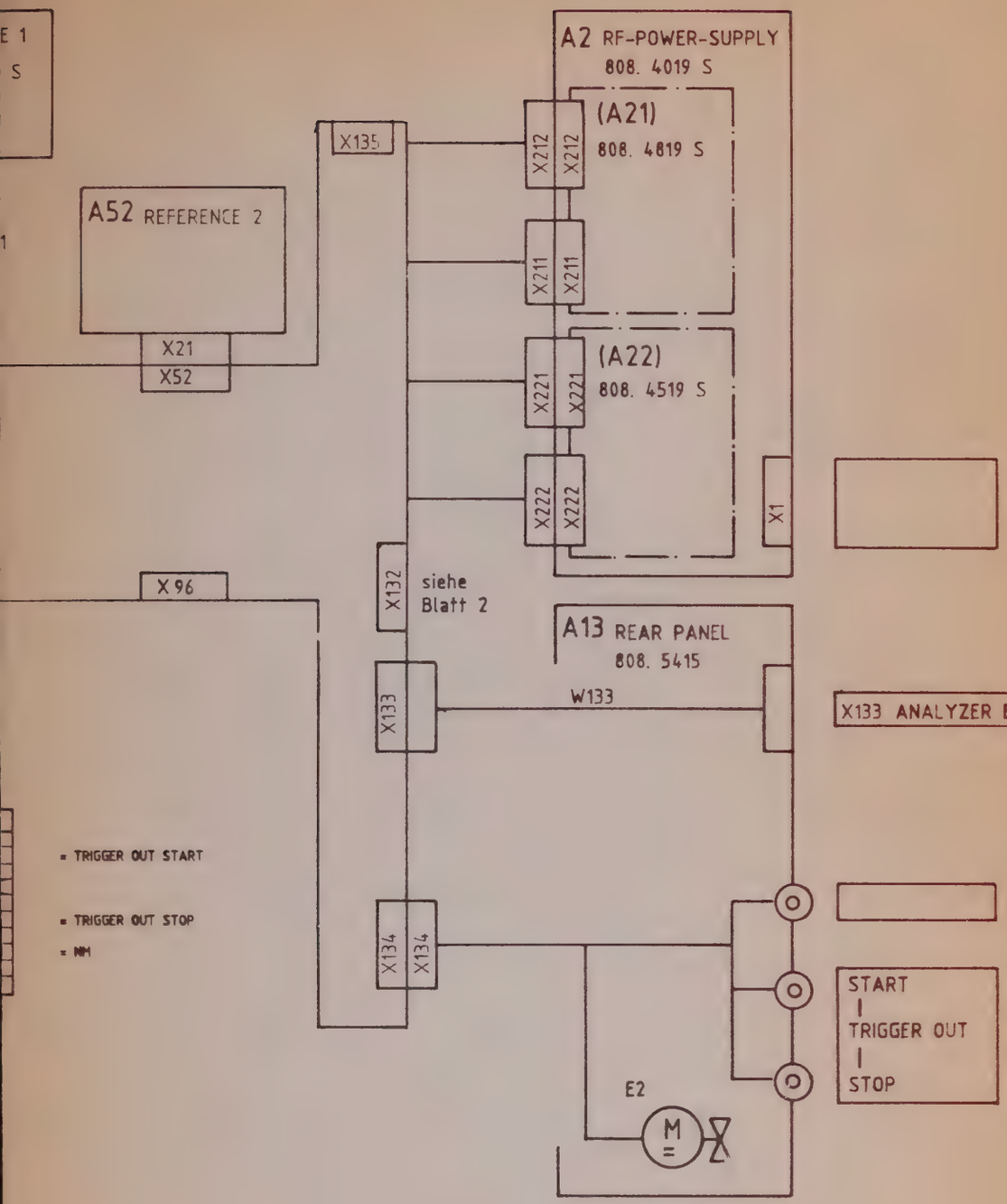

Benennung	Zeichn.-Nr	Bl. Nr
RF-UNIT	848. 0550 S	1

CAL.OUT
100MHz
-20dBm
±0,1dB

X2

W23 100MHz/-20dBm

X3

X1

RF-INPUT

A

W10

X1

A31 [illegible]
848. 3517 S

X2

B

W20
-30dBm)
(100MHz)

X1

A32 RF-MODULE
848. 9511 S

X13

W30

A33 1. IF BANDPASS
5421,4MHz

A34 IF PREAMPLIFIER
848. 8009 S
(3rd IF)

X3

X8

C

3. IF
21,4MHz
(-33dBm±2dB)

W72

W76

2. IF 221,4MHz
(-37dBm)
5200MHz/+18dBm±1dB

W85

5-20MHz/TTL
(11,4MHz)

5421,4 to 10621,4MHz/+18dBm±3dB

A11
FRONT
PANEL
806. 4811

X2

X6

X7

X1

A42 YIG-SYNCHRONIZATION
849. 2010

PLL
Volt
±8V

A500
2nd LO
BANDPASS

X500

X600

X2

X8

X3

X5

X6

A44 2nd LO/3rd CONVERTER
848. 3507 S

X4

X7

5421,4.....10621,4MHz
(5521 4MHz)
>+13dBm

W95

W91

203,84-211,54MH
(204,074 MHz)

X13

X12

A41 YIG OSZILLATOR
848. 7519

A43 YIG PRETUNE
848. 6506 S

Für unsere Unterlage behalten
wir uns alle Rechte vor

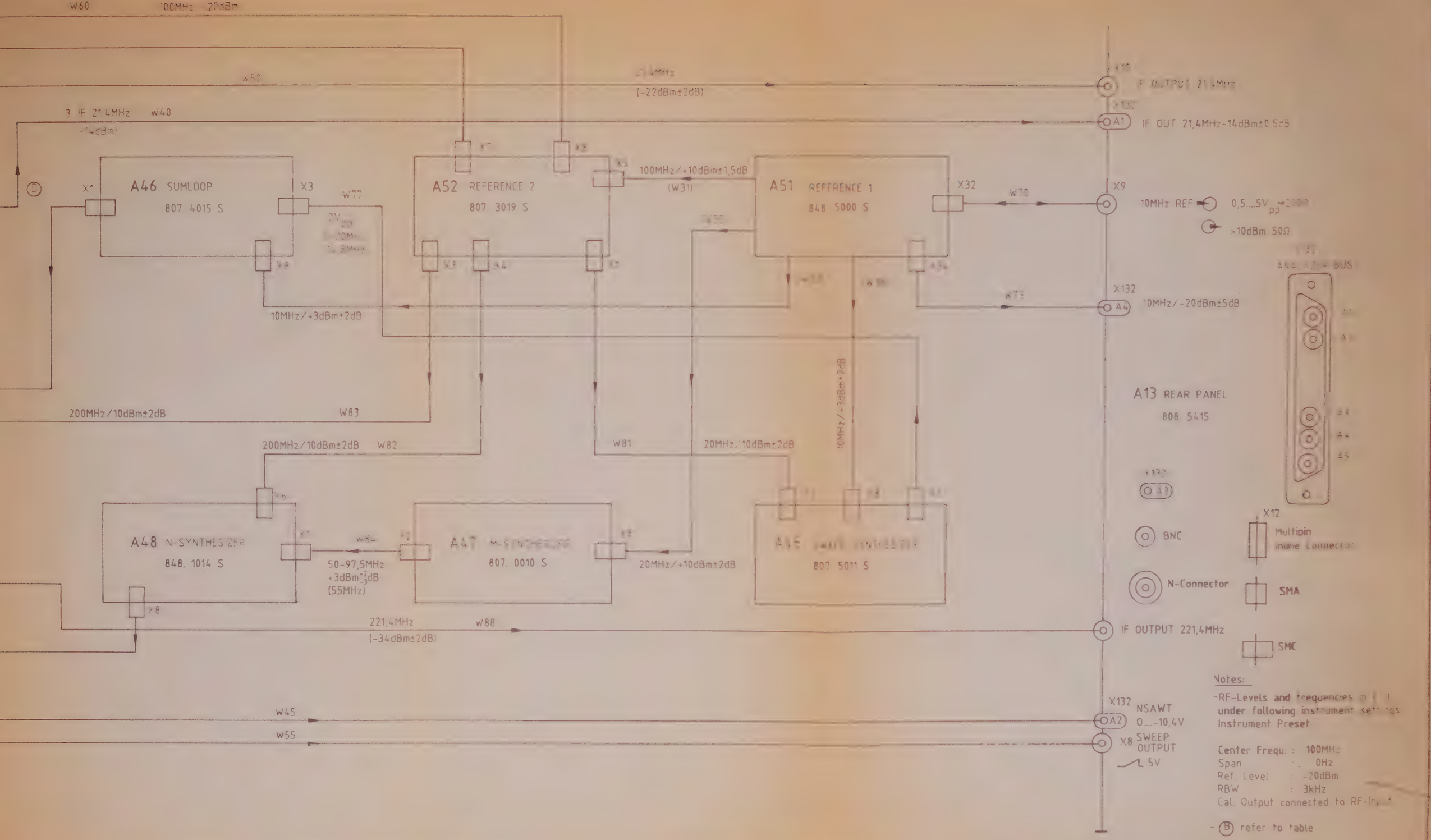
W60
100MHz -20dBm
W50
(-22dBm±2dB)
3. IF 21,4MHz W40
IF OUT 21,4MHz-14dBm±0,5dB
A46 SUMLOOP
807. 4015 S
X1
X3
W77
A52 REFERENCE 2
807. 3019 S
100MHz/+10dBm±1,5dB
(W31)
A51 REFERENCE 1
848. 5000 S
X32
W70
X9
10MHz REF
0,5....5V pp
>10dBm 50Ω
X132
A4
10MHz/-20dBm±5dB
10MHz/+3dBm±2dB
200MHz/10dBm±2dB
W83
200MHz/10dBm±2dB W82
W81
20MHz/10dBm±2dB
10MHz/+3dBm±2dB
A13 REAR PANEL
808. 5415
A48 N-SYNTHESIZER
848. 1014 S
50-97,5MHz
+3dBm +2 -3 dB
(55MHz)
A47 M-SYNTHESIZER
807. 0010 S
20MHz/+10dBm±2dB
807. 5011 S
X8
221,4MHz
(-34dBm±2dB)
W88
IF OUTPUT 221,4MHz
BNC
N-Connector
X12
Multipin
Inline Connector
SMA
SMC
W45
W55
X132
A2
NSAWT
0....-10,4V
X8
SWEEP
OUTPUT
5V
Notes:
-RF-Levels and frequencies in ( ) under following instrument settings
Instrument Preset
Center Frequ. : 100MHz
Span : 0Hz
Ref. Level : -20dBm
RBW : 3kHz
Cal. Output connected to RF-Input
- (B) refer to table
ROHDE & SCHWARZ
A
B
C
04.88
07.88
HW
HW
UL
RF UNIT
FSB
848. 0550 S

+12V	X222	14	X511	8													
+15V	024	1	X43A	7	X42C	7	X97A	7	X47A	7	X44C	7	X321	3			
			X45C	7	X900	9	X900	7									
			X46A	7	X34C	7	X52C	7	X46C	7	X52A	7	X45A	7			
			X96A	7	X511	5	X43C	7	X96C	7	X511	6	X42A	7			
			X97C	7	X48C	7	X47C	7	X44A	7	X34A	7	X48A	7			
			X63A	7	027	1	X63B	7	X111	14	X63C	7	X111	12			
			X135	4													
+20V	X34A	11	X42A	11	X45A	11	X42C	11	X46C	11	X46A	11	X47C	11			
			X47A	11	X48C	11	X48A	11									
			X96A	11	X43A	11	X63A	5	X43C	11	X212	10	X45C	11			
			X97C	11	X34C	11	X97A	11	X44A	11	X96C	11	X44C	11			
+28V	X34A	13	X46A	13	X42A	13	X47C	13	X42C	13	X47A	13	X48C	13			
			X48A	13	X511	20	X900	11									
			X96A	13	X212	12	X63B	5	X43A	13	X46C	13	X43C	13			
			X97C	13	X34C	13	X97A	13	X44A	13	X96C	13	X44C	13			
+5V	011	1	X44C	31	X43A	31	X43C	31	X42A	31	X42C	31					
			X47C	31	X96C	31	X47A	31	X97A	31	X48C	31	X97C	31			
			X48A	31	X34A	31	X52C	31	X34C	31	X52A	31	X44A	31			
			X61C	31	X45C	31	X62C	31	X63A	31	X45A	31	X900	3			
			X63B	31	X46C	31	X900	4	X63C	31	X46A	31	X96A	31			
			X111	4	X61A	31	X111	3	X61B	31	X62A	31	014	1			
+5V*	012	1	X42A	3	X43A	3	X42C	3	X63C	3	X46A	3	X44C	3			
			X52A	3	X511	19											
			X96A	3	X47C	3	X44A	3	X96C	3	X47A	3	X34C	3			
			X97A	3	X48C	3	X34A	3	X97C	3	X48A	3	X52C	3			
			X45C	3	X63A	3	X45A	3	X43C	3	X63B	3	X46C	3			
+FAN	X134	16	X222	18													
-15V	026	1	X34C	9	X52C	9	X47C	9	X44A	9	X52A	9	X46A	9			
			X42A	9	X900	10	X42C	9	X321	1							
			X44C	9	X46C	9	X43A	9	X45A	9	X43C	9	X45C	9			
			X63C	5	X97C	9	X48C	9	X34A	9	X48A	9	X47A	9			
			029	1	X96C	9	X111	13	X96A	9	X97A	9	X511	9			
-FAN	X134	14	X222	17													
ASHYPT	X43A	16	X61C	12													
AH1	X63C	20	X133	26													
AH2	X63A	21	X133	8													
AH3	X63C	21	X133	27													
AH4	X63A	22	X133	9													
AH5	X63C	22	X133	28													
AH6	X63A	23	X133	10													
AP1	X34A	18	X43A	18	X62A	9	X45A	14	X96A	18	X97A	18					
AP2	X34C	18	X43C	18	X62A	10	X45C	14	X96C	18							
AP3	X34A	19	X43A	19	X62A	11	X45A	15	X96A	19	X97A	19					
CALTRK	X62C	3	X135	2													
DH0	X61C	25	X63C	25	X133	13											
DH1	X61A	26	X63A	26	X133	32											

Fur[illegible]e Unterlage behalten
[illegible]s alle Rechte vor

A		11.86	HW	1KGF	Tag	Name	Benennung			
B	32 745(100)	03.87	HW	Bearb	10.85	H.W.	ED MOTHERBOARD			Z
C	37 063 (3)	02.88	HW	Gepr						
D	37 063 (24)	08.88	HW	Norm						
				ROHDE&SCHWARZ			Zeichn -Nr	808. 2016 S		Blatt-Nr 1 v 6 Bl
And Zust	Anderungs-Mitteilung	Tag	Name	zu Gerat	FSA		reg ı V	806. 4011 V	erste Z	806. 4011

DH2	X61C	26	X63C	26	X133	14									
DH3	X61A	27	X63A	27	X133	33									
DH4	X61C	27	X63C	27	X133	15									
DH5	X61A	28	X63A	28	X133	34									
DH6	X61C	28	X63C	28	X133	16									
DH7	X61A	29	X63A	29	X133	35									
DLC0	X34A	26	X97A	26	X96A	26									
DLC1	X34C	26	X97C	26	X96C	26									
DLC2	X34A	27	X97A	27	X96A	27									
DLC3	X34C	27	X97C	27	X96C	27									
DLC4	X34A	28	X97A	28	X96A	28									
DLC5	X34C	28	X97C	28	X96C	28									
DLC6	X34A	29	X97A	29	X96A	29									
DLC7	X34C	29	X97C	29	X96C	29									
DP0	X34A	22	X45A	22	X46A	22	X47A	22	X48A	22	X52A	22			
			X44A	22	X97A	22	X43A	22	X96A	22	X42A	22	X62A	22	
DP1	X34C	22	X45C	22	X46C	22	X47C	22	X48C	22	X52C	22			
			X44C	22	X97C	22	X43C	22	X96C	22	X42C	22	X62C	22	
DP2	X34A	23	X45A	23	X46A	23	X47A	23	X48A	23	X52A	23			
			X44A	23	X97A	23	X43A	23	X96A	23	X42A	23	X62A	23	
DP3	X34C	23	X45C	23	X46C	23	X47C	23	X48C	23	X52C	23			
			X44C	23	X97C	23	X43C	23	X96C	23	X42C	23	X62C	23	
DP4	X34A	24	X45A	24	X46A	24	X47A	24	X48A	24	X52A	24			
			X44A	24	X97A	24	X43A	24	X96A	24	X42A	24	X62A	24	
DP5	X34C	24	X45C	24	X46C	24	X47C	24	X48C	24	X52C	24			
			X44C	24	X97C	24	X43C	24	X96C	24	X42C	24	X62C	24	
DP6	X34A	25	X45A	25	X46A	25	X47A	25	X48A	25	X52A	25			
			X44A	25	X97A	25	X43A	25	X96A	25	X42A	25	X62A	25	
DP7	X34C	25	X45C	25	X46C	25	X47C	25	X48C	25	X52C	25			
			X44C	25	X97C	25	X43C	25	X96C	25	X42C	25	X62C	25	
DP8	X45A	26	X62A	26											
DP9	X45C	26	X62C	26											
DP10	X45A	27	X62A	27											
DP11	X45C	27	X62C	27											
DP12	X45A	28	X62A	28											
DP13	X45C	28	X62C	28											
DP14	X45A	29	X62A	29											
DP15	X45C	29	X62C	29											
DSTBY	X111	5	X133	2											
EXTREF	X52A	16	X511	12	X222	16									
FA0	X62A	5	X900	18											
FA1	X62A	6	X900	17											
FA2	X62A	7	X900	20											
FA3	X62A	8	X900	19											
FANCON	X212	3	X222	3											
LFIA	X62C	6	X900	14											
LFIB	X62C	5	X900	13											
FIFO	X61A	24	X63B	26											
FRQSTP	X43C	19	X133	25											
FSX0	X62A	30	P3	1											
FSX1	X62C	30	P5	1											
GNDA	017	1	X134	1	X511	10	X63A	1	P2	1	X48C	1	X63B	1	
			X134	7	X511	1	X134	5	X511	3	X134	3	X511	4	

Fur[illegible]se Unterlage behalten
[illegible]s alle Rechte vor

B	32 746(100)	03.87	HW	1KGF	Tag	Name	Benennung
D	37 063 (24)	08.88	HW	Bearb	10.85	H.W.	ED MOTHERBOARD
E	37 063 (46)	11.88	HW	Gepr			
				Norm			

And Zust	Anderungs-Mitteilung	Tag	Name

ROHDE&SCHWARZ

Zeichn -Nr 808. 2016 S

Blatt-Nr 2 v 6 Bl

zu Gerat FSA

reg i V 806. 4011 V

erste Z 806. 4011

Z

PE 095/280-0781

Erich Feucht, München 07 6001 8

GNDA		X222 5	X222 13	X111 15	X134 9	X111 11	X511 2
		X321 4	X42A 6	X42C 8	X42A 4	X42C 6	X42A 2
		X34A 4	X34C 2	X52A 4	X46A 8	X45A 4	X45C 2
		X42C 4	X42A 1	X42C 1	X42C 2		
		X43A 8	X43C 6	X44C 1	X43C 1	X43A 10	X43C 8
		X43C 12	X42A 12	X42A 10	X42C 12	X42A 8	X42C 10
		X44A 2	X43A 2	X43A 6	X43C 4	X44A 1	X43A 1
		X44C 2	X43C 2	X132 7	X43A 12	X43C 10	X132 1
		X44C 4	X44C 12	X900 8	X900 2	X44A 4	X43A 4
		X45A 1	X46C 2	X34A 2	X34C 1	X97C 12	X96C 12
		X45A 8	X45C 6	X46C 10	X34C 8	X52C 1	X45A 10
		X45C 4	X46C 8	X34A 8	X34C 6	X52A 1	X46A 12
		X45C 8	X46C 12	X44A 8	X34C 10	X52C 2	X45A 12
		X45C 10	X44A 6	X44A 10	X44C 8	X34A 10	X34C 12
		X45C 12	X44C 6	X44A 12	X44C 10	X34A 12	X900 1
		X46C 6	X34A 6	X34C 4	X52A 2	X46A 10	X45A 6
		X47A 1	X47A 12	X47C 10	X97A 2	X97A 6	X96A 6
		X47A 10	X47C 8	X48C 12	X97A 4	X96C 6	X48A 12
		X47C 2	X97C 1	X97C 4	X97A 10	X97C 8	X96A 10
		X47C 6	X48C 10	X96C 4	X48A 10	X47A 2	X47C 4
		X48A 1	X48C 2	X63C 1	X48A 2	X48C 4	X96A 1
		X43A 4	X48C 6	X96A 2	X96C 1	X48A 6	X47A 6
		X48C 8	X96A 4	X96C 2	X48A 8	X47A 4	X47A 8
		X52A 6	X52C 4	X46A 6	X45A 2	X45C 1	X46C 4
		X52A 10	X52C 8	X46A 2	X46C 1	X34A 1	X97A 12
		X96C 8	X52C 12	X47C 1	X47C 12	X97A 1	X97C 2
		X97A 8	X97C 6	X96A 8	X52A 12	X52C 10	X46A 1
		X97C 10	X96A 12	X96C 10	X52A 8	X52C 6	X46A 4
		X212 6	021 1	X111 2	025 1	X111 16	X111 1
GNDD	015 1	X133 1	X46C 32	X96C 32	X133 20	X46A 32	X97A 32
		X222 1	X133 37	X47C 32	X97C 32	019 1	X133 19
		X42A 32	X42C 32				
		X44A 32	X52C 32	X44C 32	X52A 32	X43A 32	X43C 32
		X47A 32	X34A 32	X212 1	X48C 32	X34C 32	X48A 32
		X62A 32	X63B 32	X45C 32	X63C 32	X45A 32	X96A 32
		X61A 32	X61B 32	X61C 32	P1 1	X62C 32	X63A 32
		X135 3	P4 1.				
JNTRES	X34A 21	X45A 21	X46A 21	X47A 21	X48A 21	X52A 21	
		X44A 21	X97A 21	X43A 21	X96A 21	X42A 21	X62A 21
LBS2LO	X44C 21	X61C 22					
LBS0	X63C 18	X133 30					
LBS1	X61C 18	X133 29					
LBS2IF	X34C 21	X61C 23					
LBSM0	X47C 21	X62C 20					
LBSN0	X48C 21	X62A 19					
LBSR2	X52C 21	X62C 19					
LBSSU0	X46C 21	X62C 21					
LBSSW1	X45A 16	X62C 10					
LBSSW2	X45C 16	X62A 12					
LBSSW0	X45C 15	X62C 9					
LBSTG	X61A 23	X96C 21	X97C 21				
LBSYPT	X43C 21	X61A 22					
LBSYSY	X42C 21	X61C 7					

Änd Zust	Änderungs-Mitteilung	Tag	Name		Tag	Name
C	37 063 (3)	02.88	HW	1KGF		
D	37 063 (24)	08.88	HW	Bearb	10.85	H.W.
E	37 063 (46)	11.88.	HW	Gepr		
				Norm		

Benennung: ED MOTHERBOARD — Z

ROHDE & SCHWARZ

Zeichn.-Nr: 808. 2016 S — Blatt-Nr 3 v 6 Bl

zu Gerät: FSA — reg. i. V: 806. 4011 V — erste Z: 806. 4011

Für diese Unterlage behalten wir uns alle Rechte vor

LDTH	X61A	19	X63A	19	X133	11							
LE100M	X62A	16	X511	16									
LE10M	X62A	15	X511	15									
LE2IF	X34C	20	X61C	19									
LEA21	X61A	11	X212	14									
LEA22	X61A	5	X222	7									
LEF2LO	X44C	20	X61A	18									
LEFAN	X61A	6	X222	9									
LEFMO	X47C	20	X62A	17									
LEFNO	X48C	20	X62C	15									
LEFSTO	X46C	20	X62A	18									
LEFSUO	X46C	19	X62C	17									
LEFSWO	X45C	20	X62C	14									
LEFTG1	X61A	21	X96C	20	X97C	20							
LEFTG2	X61C	21	X96C	19	X97C	19							
LEFYPT	X43C	20	X61A	15									
LEFYSY	X42C	20	X61A	14									
LEL2LO	X44C	19	X61C	17									
LELRF	X61A	16	X321	5									
LELTG2	X61C	20	X97C	18									
LELYSY	X42C	19	X61C	16									
LETEMP	X61A	7	X222	8									
LIIR4	X61A	20	X63B	20									
LINT1	X63A	18	X133	17									
LINTA1	X63B	18	X133	36									
LRDH	X61C	24	X63C	24	X133	12							
LSTOPC	X34A	30	X97A	30	X96A	30							
LTRACK	X62C	2	X97A	14									
LWR	X34A	20	X45A	20	X46A	20	X47A	20	X48A	20	X52A	20	
			X44A	20	X97A	20	X43A	20	X96A	20	X42A	20	X62A 20
LWRH	X61A	25	X63A	25	X133	31							
LIORD	X61B	6	X45C	21									
NSCLK	X133	3	X212	7									
NSON	X61A	2	X212	8									
OVENC	X62A	14	X511	17									
PLL10M	X52C	16	X511	18									
LPAMP1	X62C	7	X900	16									
LPAMP2	X62C	8	X900	15									
PRESET	X111	9	X133	23									
PTSTOP	X45A	17	X62A	13									
PWRDWN	X111	7	X212	2	X222	2	X133	22					
PWRON	X212	18	X222	20									
PSAWT	X43A	30	X34A	14									
RESOUT	X61C	29	X63C	29	X133	18							
RFSTBY	X111	6	X212	19									
RSSWO	X45A	13	X46C	15									
SAWT	X34C	30	X43C	30	X97C	30	X96C	30	X900	5			
ST100M	X63A	17	X511	14									
ST10M	X63A	16	X511	13									
STF2LO	X44A	17	X63C	14									
STFMO	X47A	17	X63A	14									
STFNO	X48A	17	X63A	15									

Für diese Unterlage behalten uns alle Rechte vor

B	32 745(100)	03.87	HW	1KGF	Tag	Name	Benennung	
E	37 063 (46)	11.88	HW	Bearb	10.85	H.W.	ED MOTHERBOARD	Z
				Gepr				
				Norm				
							Zeichn -Nr	Blatt-Nr
				ROHDE&SCHWARZ			808. 2016 S	4
And Zust	Anderungs-Mitteilung	Tag	Name	zu Gerat	FSA		reg i V 806. 4011 V	erste Z 806. 4011

PF 095 4280-0781 Erich Feucht, München 07 6001 81

STFSO1	X46A 16	X63B 11	
STFSO2	X46A 18	X63A 12	
STFSTO	X46A 17	X63A 13	
STFSWO	X45C 13	X63A 11	
STFTG1	X63C 16	X96A 16	X97A 16
STFTG2	X63C 17	X96A 17	X97A 17
STFYSY	X42A 17	X63C 12	
STL2LO	X44A 16	X63C 13	
STLIFI	X34A 16	X63B 13	
STLIFO	X34A 17	X63B 14	
STLTG2	X63C 15	X97A 15	
STLYSY	X42A 16	X63C 11	
STOPI	X45C 17	X62C 11	
STTEMP	X63A 10	X222 6	
STYPT	X43A 17	X63B 12	
SWNSDC	X111 10	X212 20	
SWPCLK	X43C 15	X61C 13	
SWPRES	X43C 17	X61C 15	
SWPSET	X43C 16	X61C 14	
SWPTRG	X61C 2	X133 24	
SYGAIN	X42A 26	X62A 2	
TGI	X96A 14	X133 21	
TEMPC	X212 4	X222 4	
TRG1	X61C 9	X134 6	
TRG2	X61C 10	X134 8	
TRG3	X61C 11	X134 10	
TRGOUT	X61C 8	X134 2	
TX90	X61A 12	X900 6	
TX96	X61A 13	X96C 15	
TX97	X96C 16	X97C 15	
TRGOFF	X96C 14	X97C 14	
UA0	X63B 15	X133 4	
UA1	X63B 16	X133 5	
UA2	X63B 17	X133 6	
UA3	X63B 10	X133 7	
YFHI	X42A 29	X43C 29	X61A 30

Für diese Unterlage behalten
v 5 alle Rechte vor

A		11.86	HW	1KGF	Tag	Name	Benennung	
B	32.745(100)	03.87	HW	Bearb.	10.85	H.W.	ED MOTHERBOARD	Z
				Gepr.				
				Norm				
							Zeichn.-Nr 808. 2016 S	Blatt-Nr 5 v 6 Bl
And. Zust	Änderungs-Mitteilung	Tag	Name	ROHDE&SCHWARZ				
				zu Gerat FSA			reg. i. V. 806. 4011 V	erste Z 806. 4011

Erich Feucht, München 07 6001 81

Ansicht Lotseite

to RF-Module

A32 X321

PIN Nr	
1	+5V
2	
3	+15V
4	GNDA
5	LEVRF

X132

PIN Nr			
1	GNDA	6	GNDA
2		7	LERFOR
3		8	
4	LIN1DC	9	INTRES
5		10	
6		11	
7		12	

to CAL-Switch

X135

PIN Nr	
1	
2	CALTRK
3	GNDD
4	+15V
5	

to Rear Panel

A13 X133

PIN Nr			
1	GNDD	20	GNDD
2	DSTBX	21	TGI
3	NC..K	22	PWRDWN
4	UA0	23	PRESET
5	UA1	24	SWPTRG
6	UA2	25	FRQSTP
7	UA3	26	AH1
8	AH2	27	AH3
9	AH4	28	AH5
10	AH6	29	LB?1
11	LDTH	30	LBS0
12	LRDH	31	LWRH
13	DH0	32	DH1
14	DH2	33	DH3
15	DH4	34	DH5
16	DH6	35	DH7
17	LINT1	36	LINTA1
18	RESOUT	37	GNDD
19	GNDD		

A42 YIG-SYNCHRO... 806 8017 X42

PIN-Nr	A	B	C
1	GNDA		GNDA
2	GNDA		GNDA
3	-5V*		-5V*
4	GNDA		GNDA
5			
6	GNDA		GNDA
7	+5V		+15V
8	GNDA		GNDA
9	+5V		-15V
10	GNDA		GNDA
11	-20V		+20V
12	GNDA		GNDA
13	+28V		+28V
14			
15			
16	STSYSY		
17	STFYSY		
18			
19			LEVRFY
20	LWR		LEVIFY
21	INTRES		LBSZIF
22	DP0		DP1
23	DP2		DP3
24	DP4		DP5
25	DP6		DP7
26	GAIN		
27			
28	YFBCK		
29	YFH		
30			
31	+5V		+5V
32	GNDD		GNDD

A43 YIG-PRETUNE 806 9013 X43

PIN Nr	A	B	C
1	GNDA		GNDA
2	GNDA		GNDA
3	-5V*		-5V*
4	GNDA		GNDA
5			
6	GNDA		GNDA
7	+15V		+15V
8	GNDA		GNDA
9	-15V		-15V
10	GNDA		GNDA
11	+20V		+20V
12	GNDA		GNDA
13	+28V		+28V
14			
15			SWPTRG
16	/SWEEP		WRLE
17	STYPT		WRLE
18	AH1		AH1
19	AH3		AH3
20	LWR		LEFIF
21	INTRES		LBSZIF
22	DP0		DP1
23	DP2		DP3
24	DP4		DP5
25	DP6		DP7
26			
27			
28			
29			YFBC
30			SAWT
31	+5V		+5V
32	GNDD		GNDD

A44 LOCAL OSCILLATOR 807 1016 X44

PIN Nr	A	B	C
1	GNDA		GNDA
2	GNDA		GNDA
3	-5V*		-5V*
4	GNDA		GNDA
5			
6	GNDA		GNDA
7	+15V		+15V
8	GNDA		GNDA
9	-15V		-15V
10	GNDA		GNDA
11	+20V		+20V
12	GNDA		GNDA
13	+28V		+28V
14			
15	EPVPR		LEVFOR
16	STLFR		TEST1
17	STLFS		TEST2
18	AP1		AP2
19	AP3		TEST3
20	LWR		LE2IF
21	INTRES		LBSZIF
22	DP0		DP1
23	DP2		DP3
24	DP4		DP5
25	DP6		DP7
26	DLC0		DLC1
27	DLC2		DLC3
28	DLC4		DLC5
29	DLC6		DLC7
30	LSTOPC		SAWT
31	+5V		+5V
32	GNDD		GNDD

A34 806 001.. X34

PIN-Nr	A	B	C
1	GNDA		GNDA
2	GNDA		GNDA
3	-5V*		-5V*
4	GNDA		GNDA
5			
6	GNDA		GNDA
7	+15V		+15V
8	GNDA		GNDA
9	15V		+15V
10	GNDA		GNDA
11	+20V		+20V
12	GNDA		GNDA
13	+28V		+28V
14			
15	EPVPR		LEVFOR
16	STLFR		TEST1
17	STLFS		TEST2
18	AP1		AP2
19	AP3		TEST3
20	LWR		LE2IF
21	INTRES		LBSZIF
22	DP0		DP1
23	DP2		DP3
24	DP4		DP5
25	DP6		DP7
26	DLC0		DLC1
27	DLC2		DLC3
28	DLC4		DLC5
29	DLC6		DLC7
30	LSTOPC		SAWT
31	+5V		+5V
32	GNDD		GNDD

A97 809 3016 X97

PIN Nr	A	B	C
1	GNDA		GNDA
2	GNDA		GNDA
3	-5V*		-5V*
4	GNDA		GNDA
5			
6	GNDA		GNDA
7	-15V		+15V
8	GNDA		GNDA
9	15V		+15V
10	GNDA		GNDA
11	-20V		-20V
12	GNDA		GNDA
13	-28V		-28V
14	TRACK		TRGOFF
15	TX97		TX96
16	TFTU1		TX97
17	TFTU2		
18			LEFTG1
19			LEFTG2
20	LWR		LEFTG1
21	INTRES		LBSTG
22	DP0		DP1
23	DP2		DP3
24	DP4		DP5
25	DP6		DP7
26	DLC0		DLC1
27	DLC2		DLC3
28	DLC4		DLC5
29	DLC6		DLC7
30	LSTOPC		SAWT
31	+5V		+5V
32	GNDD		GNDD

A96 809 2010 X96

PIN-Nr	A	B	C
1	GNDA		GNDA
2	GNDA		GNDA
3	-5V*		-5V*
4	GNDA		GNDA
5			
6	GNDA		GNDA
7	-15V		+15V
8	GNDA		GNDA
9	15V		15V
10	GNDA		GNDA
11	-20V		-20V
12	GNDA		GNDA
13	-28V		-28V
14	TC		TRGOFF
15	FPVPR		TX96
16	STFTG1		TX97
17	TFTU2		
18	AP1		AP2
19	AP3		LEFTG2
20	LWR		LEFTG1
21	INTRES		LBSTG
22	DP0		DP1
23	DP2		DP3
24	DP4		DP5
25	DP6		DP7
26	DLC0		DLC1
27	DLC2		DLC3
28	DLC4		DLC5
29	DLC6		DLC7
30	LSTOPC		SAWT
31	+5V		+5V
32	GNDD		GNDD

A63 INTERFACE 807 7014 X63

PIN-Nr	A	B	C
1	GNDA	GNDA	GNDA
2			
3	-5V*	+5V*	+5V*
4			
5	-20V	+28V	-15V
6			
7	+15V	+15V	+15V
8			
9	STXXX	STXXX	STXXX
10	STTEMP	UA3	STXXX
11	STFSW0	STFS01	STLYSY
12	STFS02	STYPT	STFYSY
13	STFSTO	STLIFI	STL2LO
14	STFMO	STLIFO	STF2LO
15	STFNO	UA0	STLTG2
16	ST10M	UA1	STFTG*
17	ST100M	UA2	STFTG2
18	LINT1	LINTA1	LBS0
19	LDTH	LIIR5	LIIR*
20	LIIR6	LIIR4	AH1
21	AH2	LIIR3	AH3
22	AH4		AH5
23	AH6		
24			LRDH
25	LWRH		DH0
26	DH1	FIFO	DH2
27	DH3	TG0XXX	DH4
28	DH5	TG1XXX	DH6
29	DH7		RESOUT
30			
31	+5V	+5V	+5V
32	GNDD	GNDD	GNDD

… Panel — X134

	PIN-Nr.	
GNDA	2	TRGOUT
GNDA	4	
GNDA	6	TRG1
GNDA	8	TRG2
GNDA	10	TRG3
	12	
	14	FAN
	16	+FAN

Solder Pins

P1	GNDD
P2	GNDA
P3	FSXØ
P4	GNDD
P5	FSX1

to Submotherboard — X900

LFIB | LFIA

LPAMP2 | LPAMP1

A2 from Power Supply

A22

FANCON

GNDA

LEA22

LEFAN

PWRDWN

A21

SPARE

to Front Panel

SWNSDC

+15V

+15V

A51 to REFERENCE — X511

PLL10M

… to Front Panel

A	B	C
C6		C5
C7		C4
		C3
UL17		C2
UL16		C1
UL15		CØ
UL14		E17
UL13		E16
UL12		E15
UL11		E14
UL10		E13
UL7		E12
UL6		E11
UL5		E10
UL4		E7
UL3		E6
UL2		E5
UL1		E4
ULØ		E3
ULED		E2
DR1		E1
DRØ		EØ
RL7		TAØ
RL6		TA1
RL5		TA2
RL4		TA3
RL3		TA4
RL2		TA5
RL1		TA6
RLØ		TA7
GNDD	GNDD	GNDD

A61 FREQUENCY PROCESSOR 807 6018 — X61

PIN-Nr.	A	B	C
1			
2	NSON	HOLD	SWPTRG
3	SPARE	HLDA	TEST
4	LEXXX	DRQØ	ARDY
5	LEA22	DRQ1	NMI
6	LEFAN	LIORD	LFCCX
7	LETEMP	DTFP	LBSYSY
8	LEXXX		TRGOUT
9	LEXXX		TRG1
10	LEXXX		TRG2
11	LEA21		TRG3
12	TX9Ø		ASHYPT
13	TX96		SWPCLK
14	LEFYSY		SWPSET
15	**LEIFOR**		SWPRES
16	**LERFOR**		LELYSY
17	LEXXX		LEL2LO
18	LEF2LO		LBS1
19	LDTH		LE2IF
20	LIIR4		LELTG2
21	LEFTG1		LEFTG2
22	LBSYPT		LBS2LO
23	LBSTG		LBS2IF
24	FIFO		LRDH
25	LWRH		DHØ
26	DH1		DH2
27	DH3		DH4
28	DH5		DH6
29	DH7		RESOUT
30	YFHI		
31	+5V	+5V	+5V
32	GNDD	GNDD	GNDD

A61 FREQUENCY PROCESSOR 807 6018 — X62

PIN-Nr	A	B	C
1			
2	SYGAIN		LTRACK
3			CALTRK
4	SPARE		LIN1DC
5	FAØ		FITM16
6	FA1		[illegible]
7	FA2		LPAMP1
8	FA3		LPAMP2
9	AP1		LBSSWØ
10	AP2		LBSSW1
11	AP3		STOPI
12	LBSSW2		LFXXX
13	PTSTOP		LEXXX
14	OVENC		LEFSWO
15	LE10M		LEFNO
16	LE100M		LEXXX
17	LEFMO		LEFSUO
18	LEFSTO		LBSXXX
19	LBSNC		LBSR2
20	LWR		[illegible]
21	INTRES		[illegible]
22	DPØ		DP1
23	DP2		DP3
24	DP4		DP5
25	DP6		DP7
26	DP8		DP9
27	DP10		DP11
28	DP12		DP13
29	DP14		DP15
30	FSXØ		FSX1
31	+5V		+5V
32	GNDD		GNDD

A45 SWEEP SYNTHESIZER 807 5011 — X45

PIN-Nr	A	B	C
1	GNDA		GNDA
2	GNDA		GNDA
3	+5V*		+5V*
4	GNDA		GNDA
5			
6	GNDA		GNDA
7	+15V		+15V
8	GNDA		GNDA
9	[illegible]		[illegible]
10	GNDA		GNDA
11	[illegible]		[illegible]
12	GNDA		GNDA
13	[illegible]		[illegible]
14	[illegible]		[illegible]
15	AP3		LBSSW2
16	LBSSW1		[illegible]
17	PTSTOP		STOP
18			
19			
20	WR		LEFSWO
21	INTRES		[illegible]
22	DPØ		DP1
23	DP2		DP3
24	DP4		DP5
25	DP6		DP7
26	DP8		DP9
27	DP10		DP11
28	DP12		DP13
29	DP14		DP15
30			
31	+5V		+5V
32	GNDD		GNDD

A46 SUMLOOP 807 4015 — X46

PIN-Nr	A	B	C
1	GNDA		[illegible]
2	GNDA		[illegible]
3	+5V*		[illegible]
4	GNDA		GNDA
5			
6	GNDA		[illegible]
7	[illegible]		[illegible]
8	GNDA		[illegible]
9	[illegible]		[illegible]
10	GNDA		[illegible]
11	[illegible]		[illegible]
12	GNDA		[illegible]
13	[illegible]		[illegible]
14			
15			[illegible]
16	[illegible]		
17	[illegible]		
18	[illegible]		
19			[illegible]
20	WR		[illegible]
21	INTRES		[illegible]
22	[illegible]		[illegible]
23	[illegible]		[illegible]
24	[illegible]		[illegible]
25	[illegible]		[illegible]
26			
27			
28			
29			
30			
31	+5V		[illegible]
32	GNDD		[illegible]

A47 [illegible] — X47

PIN-Nr	A	B	C
1	GNDA		GNDA
2	GNDA		GNDA
3	+5V*		+5V*
4	GNDA		GNDA
5			
6	GNDA		GNDA
7	+15V		+15V
8	GNDA		GNDA
9	[illegible]		[illegible]
10	GNDA		GNDA
11	[illegible]		[illegible]
12	GNDA		GNDA
13	[illegible]		+28V
14			
15			
16			
17	STAMO		
18			
19			
20	LWR		LEFMO
21	INTRES		LBSMO
22	DPØ		DP1
23	DP2		DP3
24	DP4		DP5
25	DP6		DP7
26			
27			
28			
29			
30			
31	+5V		+5V
32	GNDD		GNDD

A48 N-SYNTHESIZER 807 2012 — X48

PIN-Nr	A	B	C
1	[illegible]		[illegible]
2	[illegible]		[illegible]
3	[illegible]		[illegible]
4	GNDA		GNDA
5			
6	GNDA		GNDA
7	[illegible]		+15V
8	[illegible]		[illegible]
9	[illegible]		[illegible]
10	[illegible]		GNDA
11	[illegible]		[illegible]
12	GNDA		GNDA
13	[illegible]		[illegible]
14			
15			
16			
17	[illegible]		
18			
19			
20	LWR		LEFNO
21	INTRES		LBSNO
22	DPØ		DP1
23	DP2		DP3
24	DP4		DP5
25	DP6		DP7
26			
27			
28			
29			
30			
31	+5V		+5V
32	GNDD		GNDD

A52 REFERENCE 2 807 3019 — X52

PIN-Nr	A	B	C
1	GNDA		GNDA
2	GNDA		GNDA
3	+5V*		+5V*
4	GNDA		GNDA
5			
6	GNDA		GNDA
7	[illegible]		+15V
8	GNDA		GNDA
9	15V		-15V
10	GNDA		GNDA
11			
12	GNDA		GNDA
13			
14	**AP1**		**AP2**
15	**AP3**		
16	EXTREF		PLL10M
17	[illegible]		
18			
19			
20	LWR		
21	INTRES		LBSR2
22	DPØ		DP1
23	DP2		DP3
24	DP4		DP5
25	DP6		DP7
26			
27			
28			
29			
30			
31	+5V		+5V
32	GNDD		GNDD

bei VAR 02 : P1-P2 (=FSA)
bei VAR 03 : P1-P2,P3-P4 (=FSB)
bei VAR 04 : P1-P2,P4-P5 (=FSM)
bei VAR 05 : P1-P2,P3-P4,P4-P5 (=ESI)

[crossed box] = **Coded**

0 1 2 3
ZENTIMETER

VARIANTENERKLÄRUNG/VERSION:

VAR 02 = für FSA
VAR 03 = für FSB
VAR 04 = für FSM
VAR 05 = für ESI

ROHDE & SCHWARZ

A	32 74[illegible]		Hw	D	37 063 (24)	04.88	Hw
B	32 745 (100)	03.87	Hw	E	37 063 (46)	11.88	Hw
				F	37 066 (26)	11.89	HW

ED MOTHERBOARD

808 2016 S

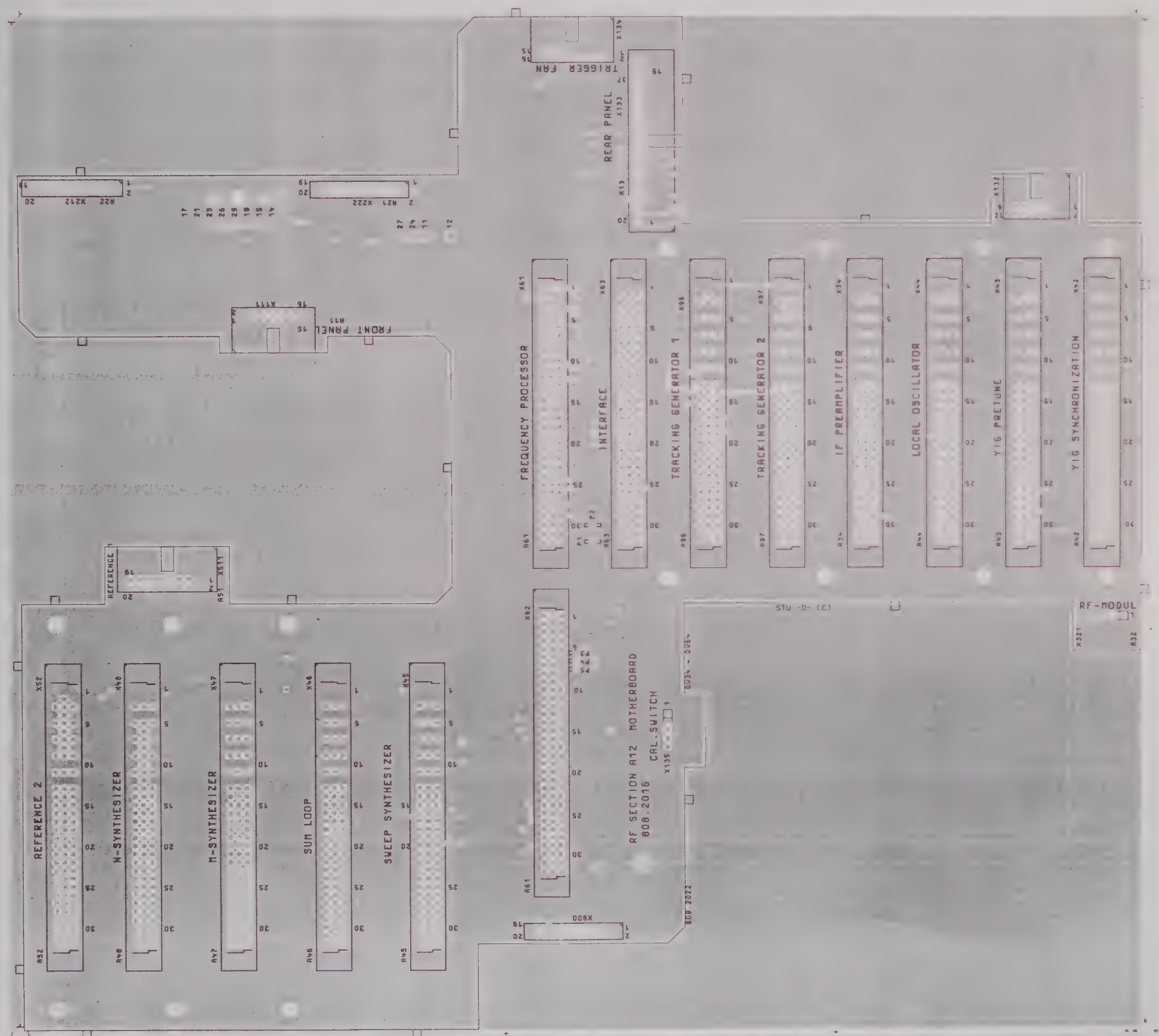

Ansicht und Leitungsführung Bauteilseite
View of tracks on component side
DV41

0 1 2 3
ZENTIMETER

VARIANTENERKLÄRUNG / VERSION
VAR 02 – GRUNDAUSFÜHRUNG / BASIC MODEL

H 37 063 08.88 HW	Maße ohne Toleranzangabe	Maßstab 1 : 1 Halbzeug: Werkst.-...	
	1KEF 08.88 HW	Benennung MOTHERBOARD	Z
Änderungs Mitteilung Tag Name	ROHDE&SCHWARZ zu Gerät FSA	808.2016.01 ED	2
		Freg. x 806.4011V	

Erich Feucht München 07.8001.81

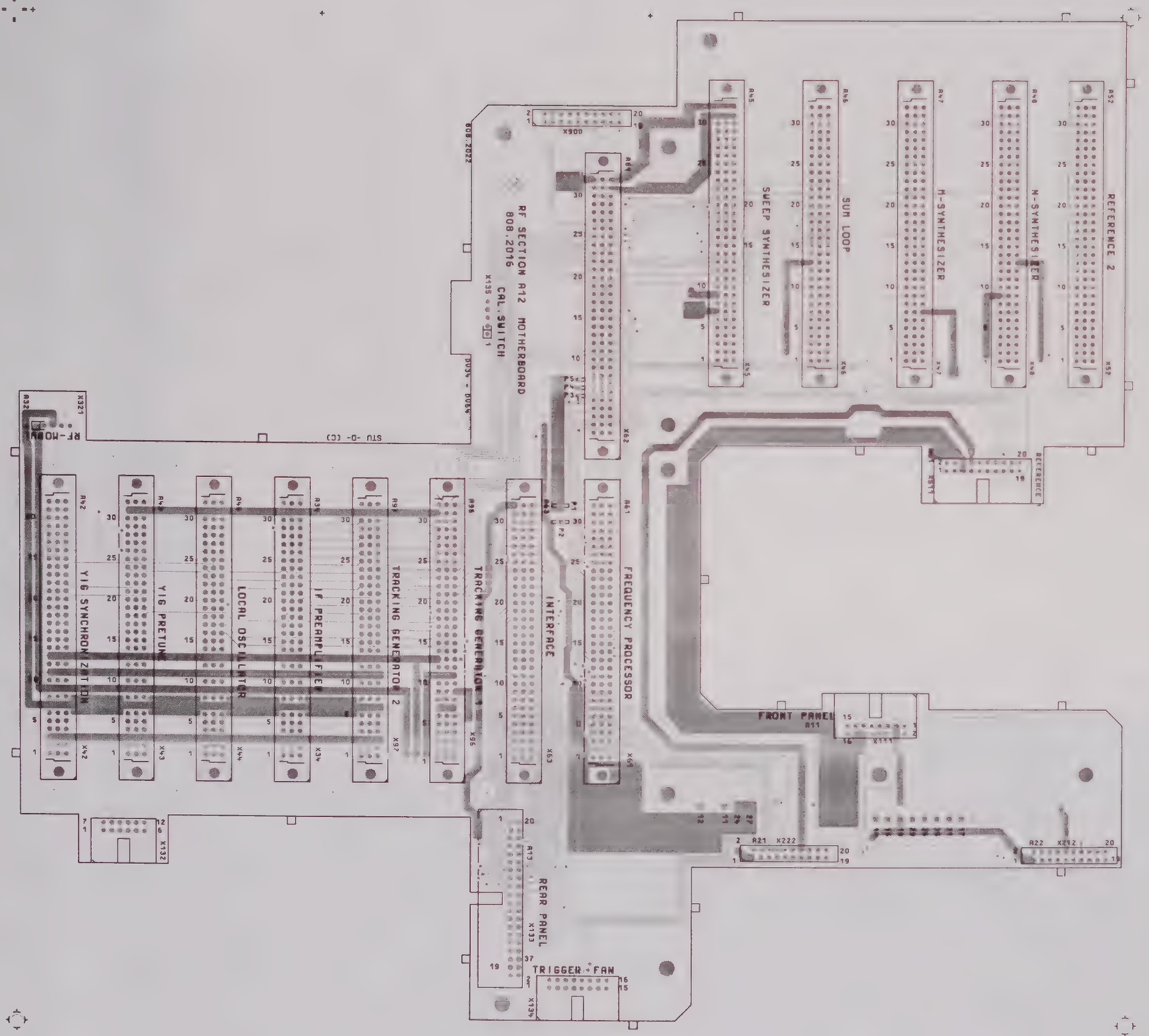

Ansicht und Leitungsführung Bauteilseite
View of tracks on component side
DV43

0 1 2 3
ZENTIMETER

VARIANTENERKLÄRUNG/VERSION
VAR 02 – GRUNDAUSFÜHRUNG/BASIC MODEL

H 37 063 08 88 HW	Maße ohne Toleranzangabe	Maßstab 1 : 1	
		Halbzeug, Werkstoff	
	1 KEF Tag Name	Benennung	
	Bearb 08.88 HW	MOTHERBOARD	Z
	Gepr		
	Norm		
	ROHDE & SCHWARZ	Zeichn.-Nr 808.2016.01	Blatt-Nr 3
And. Zust. / Änderungs-Mitteilung / Tag / Name	zu Gerät FSA	reg. i. V. 806.4011V	erste Z

PF 095 2487-0781

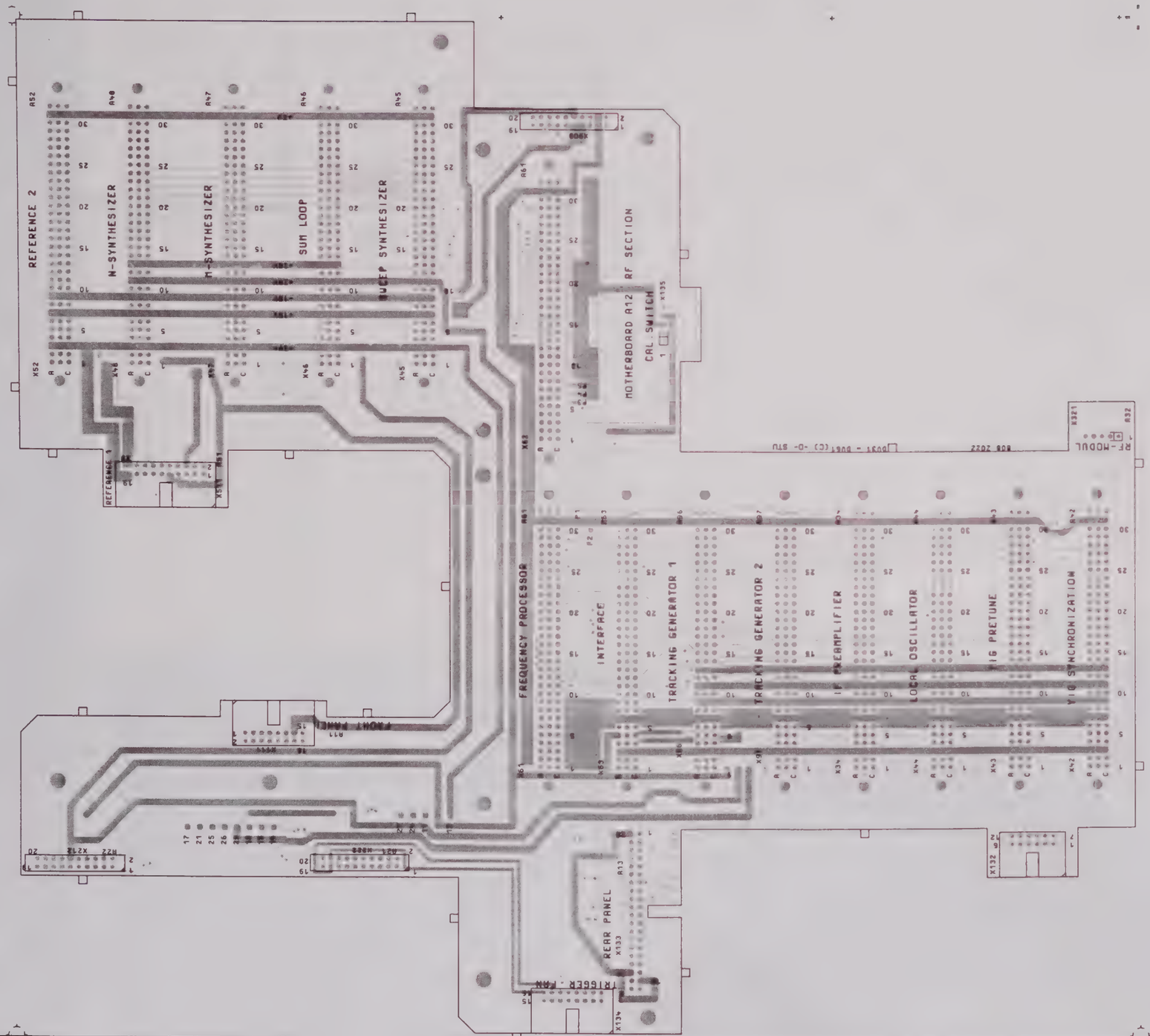

Ansicht und Leitungsführung Lotseite
View of tracks on solder side

DV13

0 1 2 3
ZENTIMETER

VARIANTENERKLÄRUNG/VERSION
VAR 02 – GRUNDAUSFÜHRUNG/BASIC MODEL

H 37 063	08.88 HW	Maße ohne Toleranzangabe	Maßstab 1 : 1		
			Halbzeug Werkstoff		
		1KEF	Tag	Name	Benennung: MOTHERBOARD Z
		Bearb	08.88	HW	
		Gepr			
		Norm			
		ROHDE&SCHWARZ			Zeichn.-Nr 808.2016.01 ED Blatt-Nr 4
Änd. Zust.	Änderungs-Mitteilung	Tag	Name	zu Gerät FSA	reg. v 806.4011V erste Z

Für diese Unterlage behalten wir uns alle Rechte vor

D-Projektion
ethode E

Ansicht und Leitungsführung Lotseite
View of tracks on solder side
DV11

0 1 2 3
ZENTIMETER

VARIANTENERKLÄRUNG/VERSION
VAR 02 – GRUNDAUSFÜHRUNG/BASIC MODEL

H 37 063	08.88 HW	Maße ohne Toleranzangabe		Maßstab 1 : 1	
				Halbzeug, Werkstoff	
		1KEF	Tag	Name	Benennung: MOTHERBOARD — Z
		Bearb	08.88	HW	
		Gepr			
		Norm			
		ROHDE & SCHWARZ		Zeichn.-Nr: 808.2016.01 ED	Blatt-Nr: 5
Änd. Zust.	Änderungs-Mitteilung	Tag	Name	zu Gerät FSA	reg. i. V. 806.4011V erste Z

Für diese Unterlage behalten wir uns alle Rechte vor

ROHDE&SCHWARZ

SERVICE DOCUMENTATION

Attenuator

849.3517.00

Contents

		Page
6	**Service Instructions Attenuator**	6.1
6.1	**Function Description**	6.1
6.2	**Testing and Adjustment**	6.1
6.2.1	Testing the Drive	6.1
6.2.2	Testing and Adjusting the RF Characteristics	6.2
6.3	**Troubleshooting**	6.2

Parts lists
Circuit diagrams
Component location plans

6 Service Instructions Attenuator

(See circuit diagram 849.3517 S)

6.1 Function Description

The attenuator module consists of a mounting plate with the RF circuit and the drive unit with switching contacts.

The mounting plate is made of copper to enable heat dissipation and contains lines, attenuating elements and a DC isolator on a ceramic substrate. A substrate contains a 50-Ω termination and the connection to the socket X3 which enables a calibration inside the instrument.

A galvanic gold surface strengthens the contact surfaces and increases the switching reliability and service life.

The drive unit for switching the contacts contains 9 rockers which are switched by magnet coils and held in the end positions by permanent magnets. Each of these rockers controls 3 switching contacts of which one connects the line and the other two switch the associated substrate. All contacts are connected to ground in unenergized state. A high contact force of 0.2 N ensures reliable contacting.

The attenuation can be switched from 0 to 81 dB in -1 dB steps.

6.2 Testing and Adjustment

6.2.1 Testing the Drive

The drive can be tested in the instrument. Connect the control signals to X12 according to Table 6-1. The attenuators or the DC isolator are switched on by a Low signal, the selected relay is switched to the required line by applying a High signal.

Measure pulses according to the following diagram at the coils pins. The pulse width is approx. 20 ms.

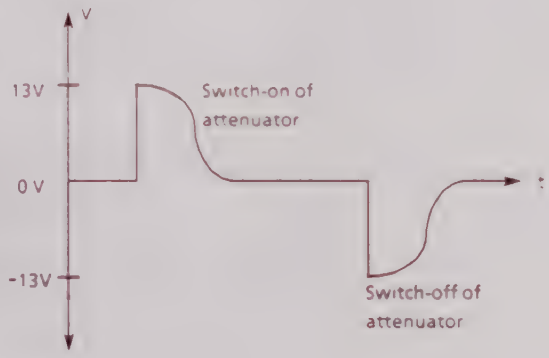

6.2.2 Testing and Adjusting the RF Characteristics

A complete test with adjustment makes EEPROM reprogramming necessary for correcting the frequency response of the preamplifier 3rd IF module.

The RF adjustment can be carried out only by using a network analyzer of high accuracy.

RF adjustment is carried out by screwing in the grub screws located in the base plate.

With a test frequency of 5.2 GHz, the attenuation values should be set according to the tolerances as listed in Table 6-2. Note that the total tolerance results from the sum of the tolerances of the selected attenuators plus the tolerance for the transmission loss with a switch value of 0 dB.

Measure the transmissions X1-X2 and the VSWR at the two sockets.

The guaranteed data are listed in Table 6-2.

Table 6-1

Control line at X12 with Low signal	Activated relay	Function
Pin-No.		
1	K1	Isolating capacitor/10 nF
2	K2	Connection line/50 Ω
3	K3	10 dB
4	K4	20 dB
5	K5	40 dB
6	K6	1 dB
7	K7	2 dB
8	K8	4 dB
9	K9	4 dB
Voltage supply at X12	Voltage	
Pin-No.		
10	+5 V	
13,14	+15 V	
15,16	GND	

Table 6-2

Characteristic	MIN	MAX	Unit
Line resistance	---	800	mΩ
Attenuation value at DC per attenuator			
1 dB	0.97	1.03	dB
2 dB	1.97	2.03	dB
4 dB	3.97	4.03	dB
10 dB	9.95	10.05	dB
20 dB	19.93	20.07	dB
40 dB	39.9	40.1	dB
Attenuation value at 5.2 GHz per attenuator			
1 dB	0.8	1.2	dB
2 dB	1.8	2.2	dB
4 dB	3.75	4.25	dB
10 dB	9 8	10 3	dB
20 dB	19.8	20.2	dB
40 dB	39.5	40.5	dB
VSWR X1, X2 0–1.5 GHz	$<1.1+[0.2*f\,(GHz)]$		
VSWR X1, X2			
1.5–2 GHz	<1.4		
2-5.2 GHz	<1.9		
Insertion loss for switch position 0 dB			
DC < f < 200 MHz		< 0.4 dB	
200 MHz < f < 1 GHz		< 0.8 dB	
1 GHz < f < 2 GHz		< 1.2 dB	
2 GHz < f < 5.2 GHz		< 1.6 dB	

6.3 Troubleshooting

Proceed as in Section 6.2 if a fault occurs. The fault can then be easily determined.

ROHDE&SCHWARZ

Schaltteillisten
Stromläufe
Bestückungspläne
Part lists
Circuit diagrams
Components plans
Listes des pièces détachées
Schémas de Circuit
Plans des composants

(R 29500 Bl. 2)
095.1000 Bl. 2

Kennz. Comp.No.	Benennung Designation		Sachnummer Stock No.	Hersteller Manufacturer	Bezeichnung Designation	enthalten in contained in
C1	CC 10NF+-10% 50V W5R CHIP CAPACITOR		093.2180	VITRAMON	VJ0504Y103KFA	1008.5672 F
C1 ..9	CE 220UF+-20%25VRD10X12,5 ELECTROLYTIC CAPACITOR		801.8331	PANASONIC	ECE-A1ESS-221	294.8619
C10	CE 47UF-10+50% 40V 9X13 ELECTROLYTIC CAPACITOR	CE	006.7142	ROEDERST	EK 00 CB 247 G	294.8619
C11	CE 22UF-10+50% 63V 9X13 ELECTROLYTIC CAPACITOR	CE	006.7120	ROEDERST	EK 00 CB 222 J	294.8619
D1	BJ SN75361AP 2XTTL/MOS-LC LEVEL CONVERTER	BJ	294.8490	NSC	DS75361N	294.8619
D2	BJ SN75361AP 2XTTL/MOS-LC LEVEL CONVERTER	BJ	294.8490	NSC	DS75361N	294.8619
D3	BJ SN75361AP 2XTTL/MOS-LC LEVEL CONVERTER	BJ	294.8490	NSC	DS75361N	294.8619
D4	BJ SN75361AP 2XTTL/MOS-LC LEVEL CONVERTER	BJ	294.8490	NSC	DS75361N	294.8619
D5	BJ SN75361AP 2XTTL/MOS-LC LEVEL CONVERTER	BJ	294.8490	NSC	DS75361N	294.8619
K1 ..9	ZM ELEKTROMAGNET (EICHL.) ELECTROMAGNET		294.8425			1008.5808
X1	FJ EINBAUBUCHSE SMA		920.0140			1008.5608
X2	FJ EINBAUBUCHSE SMA		920.0140			1008.5608
X3	FJ EINBAUBUCHSE SMA		920.0140			1008.5608
X12	FP WINKELSTECKERLEIST.36P ANGLE PIN CONNECTOR 8-POLIG ZUS.0.25ST FP087.9105	FP	243.3578	BINDER	742-5-11-0187-00-36	294.8619
Z1	BD TRENNKONDENSATOR/10NF		1008.5672			1008.5608
Z2	DT ANSCHLUSSLEITUNG		1008.5695			1008.5608
Z3	DT DAEMPFUNGSGLIED10DB/50 ATTENUATOR 10DB/50		912.5246			1008.5608
Z4	DT DAEMPFUNGSGLIED20DB/50 ATTENUATOR 20DB/50		912.5252			1008.5608
Z5	DT DAEMPFUNGSGLIED40DB/50 ATTENUATOR 40DB/50		912.5269			1008.5608
Z6	DT DAEMPFUNGSGLIED 1DB/50		1008.5720			1008.5608
Z7	DT DAEMPFUNGSGLIED 2DB/50		1008.5737			1008.5608
Z8	DT DAEMPFUNGSGLIED 4DB/50 ATTENUATOR 4DB/50		912.5230			1008.5608
Z9	DT DAEMPFUNGSGLIED 4DB/50 ATTENUATOR 4DB/50		912.5230			1008.5608

- ENDE -

Unterlage behalten wir uns alle Rechte vor

ROHDE & SCHWARZ	Äl	Datum Date	Schaltteilliste für Parts list for	Sachnummer Stock Nr.	Blatt Page
	08	1188	ZE EICHLEITUNG FUER FSB	849.3517.00 SA	1-

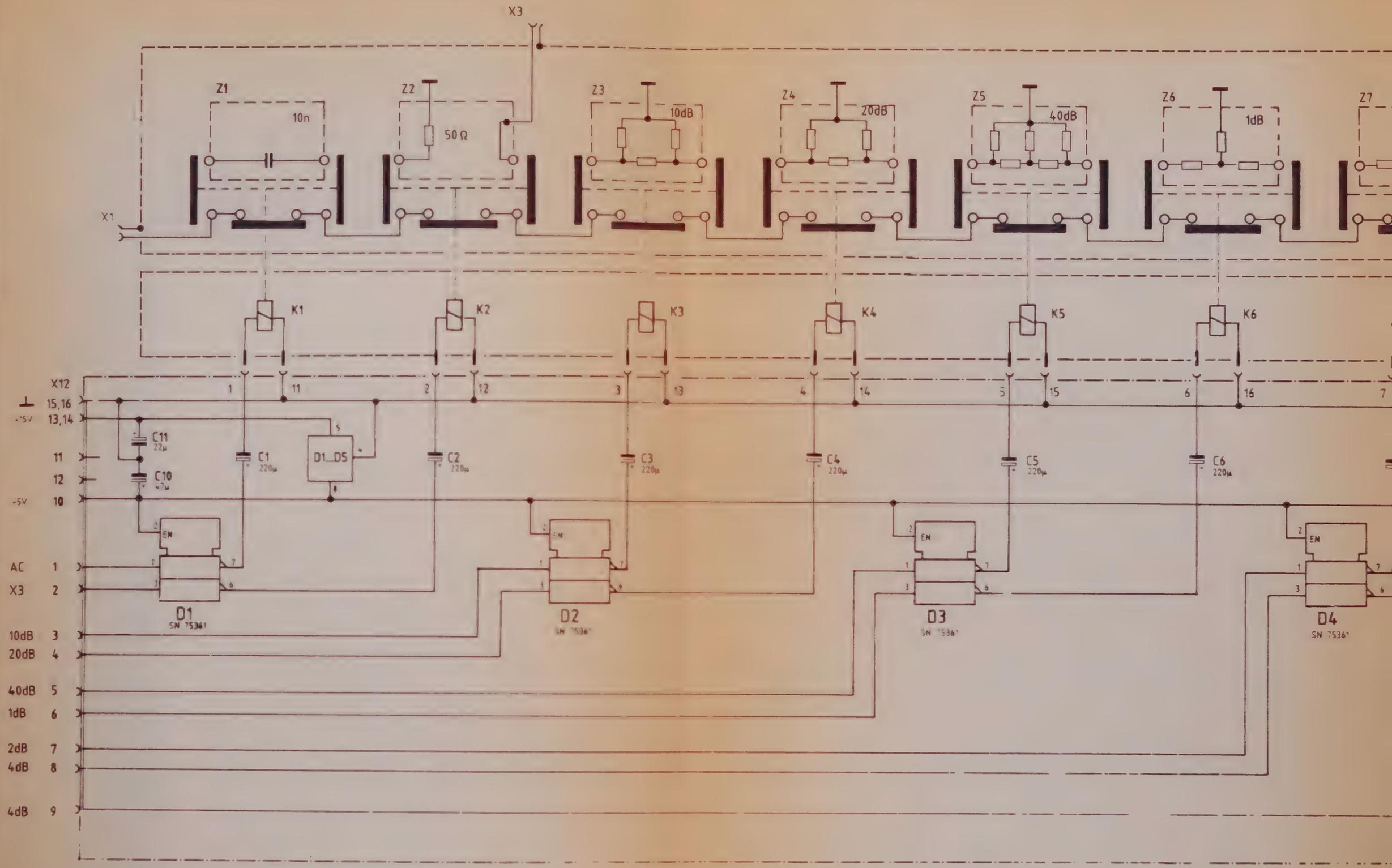

Dämpfungsglied eingeschaltet bei
LOW-Signal an den Eingängen

Attenuator pads switched on
LOW-signal at the inputs

Steckerbelegung X12 von vorne:
Pin allocation X12 f. front:

15	13	11	9	7	5	3	1
16	14	12	10	8	6	4	2

ROHDE & SCHWARZ

1KEF 08.88 Bg

Zeichn.-Nr. 849.3517.S

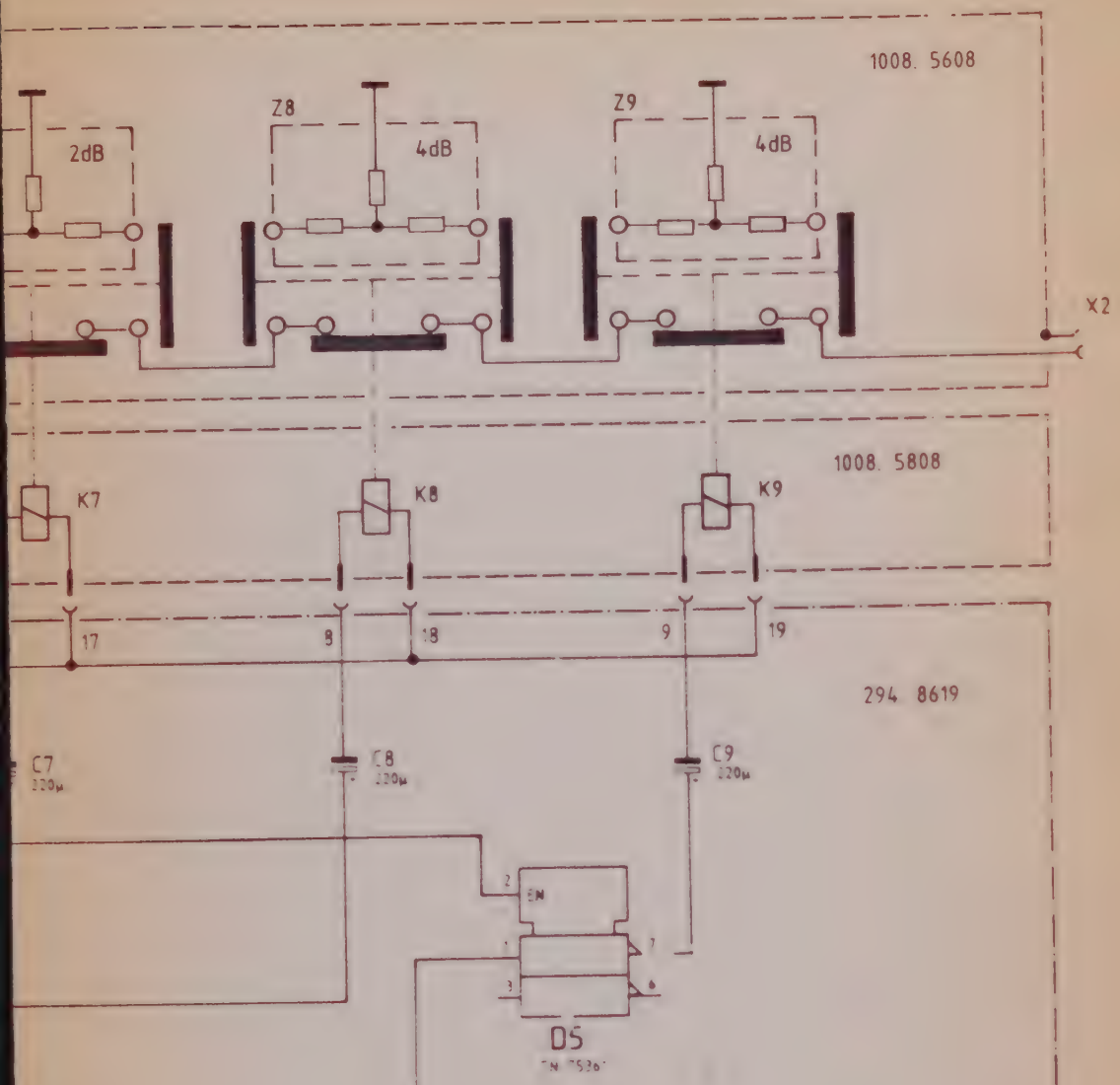

Eichleitung für FSB Attenuator for FSB	849. 3517 S	

ROHDE&SCHWARZ

SERVICE DOCUMENTATION

RF-Module

848.9511.02

Contents

		Page
6	**Service Instructions "RF Module"**	6.1
6.1	**Function Description**	6.1
6.1.1	Signal Flow	6.1
6.1.2	Input Lowpasses	6.2
6.1.3	Band-stop Filter	6.2
6.1.4	1st Mixer	6.2
6.1.5	Bandpass Filter and Directional Coupler in the LO Path	6.2
6.1.6	LO Compensation	6.3
6.1.7	Ring Separating Filter	6.3
6.1.8	Dielectric Bandpass Filter	6.3
6.1.9	1st IF Amplifier	6.3
6.1.10	IF Filter	6.4
6.1.11	2nd IF Amplifier	6.4
6.1.12	Spurious Suppression Filters	6.4
6.1.13	Band-stop Filters	6.4
6.1.14	2nd Mixer	6.4
6.1.15	2nd Separating Filter	6.4
6.2	**Testing and Adjustment**	6.6
6.2.1	Testing the GaAs FET Supply Voltages	6.6
6.2.2	Adjusting the Output Circuit of the 2nd Mixer	6.6
6.2.3	Adjusting the 1st IF Filter	6.7
6.2.4	Measurement of Ring Separating Filter	6.7
6.2.5	Adjusting the Dielectric Band-stop Filter	6.7
6.2.6	1st IF Amplifier	6.8
6.2.7	Adjusting the Dielectric Bandpass	6.8
6.2.8	2nd IF Amplifier	6.8
6.2.9	LO Suppression	6.8
6.2.10	Function Test	6.8
6.2.11	Final Test	6.9
6.2.11.1	Conversion Loss	6.9
6.2.11.2	LO Suppression	6.9
6.2.11.3	Noise Figure	6.9
6.2.11.4	3rd Order Intercept	6.9
6.2.11.5	Harmonic Distortion	6.10
6.2.11.6	Reflection Measurement	6.10
6.2.11.7	Spurious Response	6.10
6.2.11.8	Image Frequency Reception	6.10
6.3	**Troubleshooting**	6.10

Parts lists
Circuit diagrams
Component location plans

6 Service Instructions "RF Module"

(See circuit diagram 848.9511 S)

6.1 Function Description

The purpose of the RF module is to convert the frequency of the RF signal at input socket X1 to a fixed intermediate frequency. In order to obtain a clearly defined receive range, an intermediate frequency (5.421 GHz) lying above the input frequency range is used internally.

The mixer stages are supplied by a tunable (1st local = 5.421 to 10.621 GHz) and a fixed local oscillator (2nd local = 5.2 GHz).

The use of high-level mixers and the application of two low-noise IF amplifiers lead to the large dynamic range with a simultaneously excellent noise figure of the complete frequency conversion.

The module consists almost exclusively of microstrip circuits implemented on a softboard. The required range of applications is ensured by RF connectors provided for this particular purpose.

6.1.1 Signal Flow

(See block diagram 6-1)

The input signal is applied to X1. It passes two cascaded lowpass filters with cutoff frequencies of 7.5 GHz and 5.3 GHz.

A band-stop filter steepens the edge of the lowpass and improves the suppression of the IF feedthrough.

For servicing purposes, the first mixer is designed as drop-in module and converts to the first fixed IF of 5.4214 GHz.

The local oscillator signal is applied at X3 and passes a bandpass filter 5 GHz to 11 GHz.

A 20-dB directional coupler is cut in for test purposes.

If required, further decoupling of the LO signal is used for optimum LO suppression at 5.421 GHz, i.e. at the input frequency 0 MHz.

With a phase opposite to that of the LO component passing the IF path, the signal decoupled in the LO path is fed in again after the first mixer and is thus cancelled.

The IF (difference frequency of the 1st mixture) passes a ring separating filter.

The sum signal of the 1st mixer (5.4 GHz to 15.8 GHz) is terminated by 50 Ω.

The IF signal then passes a bandpass filter. The bandwidth is by the factor of ten smaller than that of the ring separating filter.

A low-noise amplifier boosts the IF signal level and applies the signal to a bandpass filter. The bandpass filter is necessary for image frequency suppression between the first and the second conversion.

A further IF amplifier boosts the signal level before applying the signal to two cascaded lowpass filters (7 GHz and 10 GHz) and a bandpass filter (5 GHz to 7 GHz) for spurious suppression.

Two band-stop filters terminate the 2nd sideband (5 GHz) of the 2nd mixer with reactive impedances.

The 2nd mixer converts the IF of 5.421 GHz to the lower IF of 221.4 MHz. The local oscillator frequency of 5.2 GHz required for this purpose is applied to X9.

The IF output of the 2nd mixer accommodates a termination for 10.6 GHz (sum frequency), a 110.7-MHz trap and a series resonant circuit for the 2nd IF of 221.4 MHz.

6.1.2 Input Lowpasses

The input lowpasses have the following functions:

- exact conversion due to their image frequency suppression
- suppression of IF feedthrough
- in conjunction with the input mixer, suppression of 1st local oscillator.

The filter consists of a Chebishev lowpass with a cutoff frequency of 7.5 GHz and a Cauer lowpass with a cutoff frequency of 5.3 GHz.

The combination of Cauer and Chebishev lowpasses reveals the advantage of the steep edge of the Cauer lowpass without the interfering effect of the filter in the image frequency range.

6.1.3 Band-stop Filter

In order to reduce the IF feedthrough, a band-stop filter has been connected into the input circuit. It consists of two dielectric resonators which are coupled to the 50-Ω microstrip transmission line.

The resonators are fixed on a plastic support. They are tuned by means of two separate adjustment screws in the cover of the RF module.

The surface treatment of the surrounding screens contributes to the high quality of this filter. The filter is designed two poles wider than required by the expected temperature drift. The filter does not affect the input frequency range.

Since, if adjusted correctly, the band-stop filter represents a narrowband absorber at the 1st IF, it helps to improve the LO feedthrough at the receive frequency 0 MHz. Here, the first LO is represented itself. Components which would be reflected at the edge of the Cauer filter due to insufficient suppression between local and RF port and would thus be fed to the 1st mixer as signal are absorbed by the band-stop filter and do not affect the conditions of reception at low frequencies.

6.1.4 1st Mixer

For servicing purposes, the 1st mixer is embedded in the softboard as drop-in module. It is manufactured using the thin-film technique and can be tested separately due to removeable SMA connectors. As it is accommodated in a case of its own, it is not subject to any environmental influences (e.g. resonances) of the module. For replacement, it is sufficient to resolder three terminals.

The mixer is designed using double-balanced technology with a beam-lead diode quartet arranged in a ring circuit.

The baluns consist of a combination of microstrip and coplanar lines.

In order to achieve the guaranteed dynamic range, an LO level of at least + 16 dBm is required at X3. The conversion loss is approx. 7 dB. The mixer case is screwed to the board. A tight contact to the ground connection is necessary. It can be improved by means of the silver-coated sheet supplied.

6.1.5 Bandpass Filter and Directional Coupler in the LO Path

The LO path of the first conversion includes a bandpass filter and a two-stage directional coupler. The passband of 5 GHz to 11 GHz of the bandpass filter permits only the desired frequencies to pass to the 1st mixer.

The directional coupler exhibits a coupling attenuation of approx. 20 dB and permits test measurements to be performed at sockets X3 and X4.

Thus, the level of the 1st oscillator and the VSWR at the LO port of the 1st mixer can be roughly checked.

Both components do not need any adjustment.

6.1.6 LO Compensation

The LO compensation is used for increasing the sensitivity of the lowest receive frequencies.

For this purpose, the LO signal is decoupled ahead of the 1st mixer and fed into the IF path in phase opposition but with the same amplitude as the component that has passed the mixer path.

After replacing the 1st mixer, amplitude and phase have to be readjusted. In his way, the LO suppression of the 1st mixer can be improved by at least 15 dB.

6.1.7 Ring Separating Filter

The 1st mixer features a particularly flat characteristic of the conversion loss referred to the frequency even if the second sideband (5.4 GHz to 15.8 GHz) is terminated by 50 Ω without reactive component.

For this purpose, a ring separating filter has been connected into circuit after the 1st mixer using stripline technology. In order to obtain a non-critical passband, a relatively large bandwidth of approx. 500 MHz has been selected.

The ring separating filter consists of a circuit section printed onto the module board as well as two Duroid washers. A clamping plate and an elastic ground connection enable the stripline design. The mechanical parts are fixed by means of set pins.

One of the Duorid washers accommodates a resonant circuit for the 1st IF. For adjusting, various washers are provided in different electrical lengths. The tongue protruding from under the plate is marked by a code that permits to identify the inserted washer without the need for dismounting the circuit.

The transmission loss for the 1st IF is max. 1.5 dB.

The ring separating filter requires neither adjustment nor maintenance. However, the resonator can be removed for servicing so that the sum and difference signal can be measured at X6.

6.1.8 Dielectric Bandpass Filter

The IF signal leaves the ring separating filter and passes a bandpass filter consisting of a dielectric resonator which is coupled to two adjacent microstrip lines.

The resonance frequency can be set by means of an adjustment screw in the cover. The screwed-on terminations at X7 and X8 are transformed into the coupling level. Thus, they contribute to the bandpass behaviour and must not be replaced.

The transmission loss is max. 1.2 dB, the 6-dB bandwidth is approx. 40 MHz.

This bandpass filter makes up for the disadvantage of the broadband ring separating filter (500 MHz) with the advantage of the improved dynamic range at low receive frequencies.

6.1.9 1st IF Amplifier

The 1st IF amplifier boosts the IF level by approx. 10 dB with a noise figure of 1.5 dB

The amplifier represents a compromise between noise and power matching with a maximum dynamic range.

The DC supply of the amplifier is ensured by a printed circuit in the adjacent chamber. This circuit switches the gate and drain voltage of the GaAs FET on and off when switching the instrument on and off.

At the output of the amplifier, an attenuator pad provides a broadband resistive load, since the subsequent filter offers extreme reactive impedances at the maximum gain of the GaAs FET.

6.1.10 IF Filter

The IF filter is a bandpass made up of five resonators and is screwed to the RF module using two SMA sockets.

It has the following functions:

- limitation of IF bandwidth
- suppression of image frequency reception of 2nd conversion
- decoupling of the two mixers.

The transmission loss is approx. 3.5 dB, the 3-dB bandwidth approx. 40 MHz.

6.1.11 2nd IF Amplifier

What has been said for the 1st IF amplifier also applies to the 2nd IF amplifier.

Its gain is approx. 12 dB, the noise figure approx. 4 dB.

An attenuator pad is again used to provide a broadband termination of the amplifier.

6.1.12 Spurious Suppression Filters

The spurious suppression filters are composed of two lowpasses (f_c = 7.5 GHz and 10 GHz) and a bandpass filter (5 GHz to 7 GHz).

Their purpose is to avoid spurious response of the frequency conversion of the two mixers over the complete dynamic range with their stopband attenuation.

6.1.13 Band-stop Filters

Two band-stop filters precede the 2nd mixer for 5 GHz.

Their purpose is:

- to offer the second mixer a defined impedance at the image frequency
- to reduce the noise contribution at the image frequency by the impedance termination

6.1.14 2nd Mixer

What has been said for the 1st mixer also applies to the 2nd mixer.

The only exception is that the 2nd local oscillator frequency (5.2 GHz) is directly fed from X9 to the mixer.

The mixer converts the 1st IF (5.421 GHz) with a local of 5.2 GHz to the 2nd IF of 221.4 MHz. The conversion loss is 7 dB.

6.1.15 2nd Separating Filter

The 2nd mixer is followed by a separating filter consisting of microstrip lines and concentrated elements.

Their purpose is:

- to terminate the sum signal of the 2nd conversion (10.6 GHz)
- to allow the difference signal (221.4 MHz) to pass with the lowest possible transmission loss
- to constitute a trap for 110.7 MHz, i.e. 0.5 x 2nd IF.

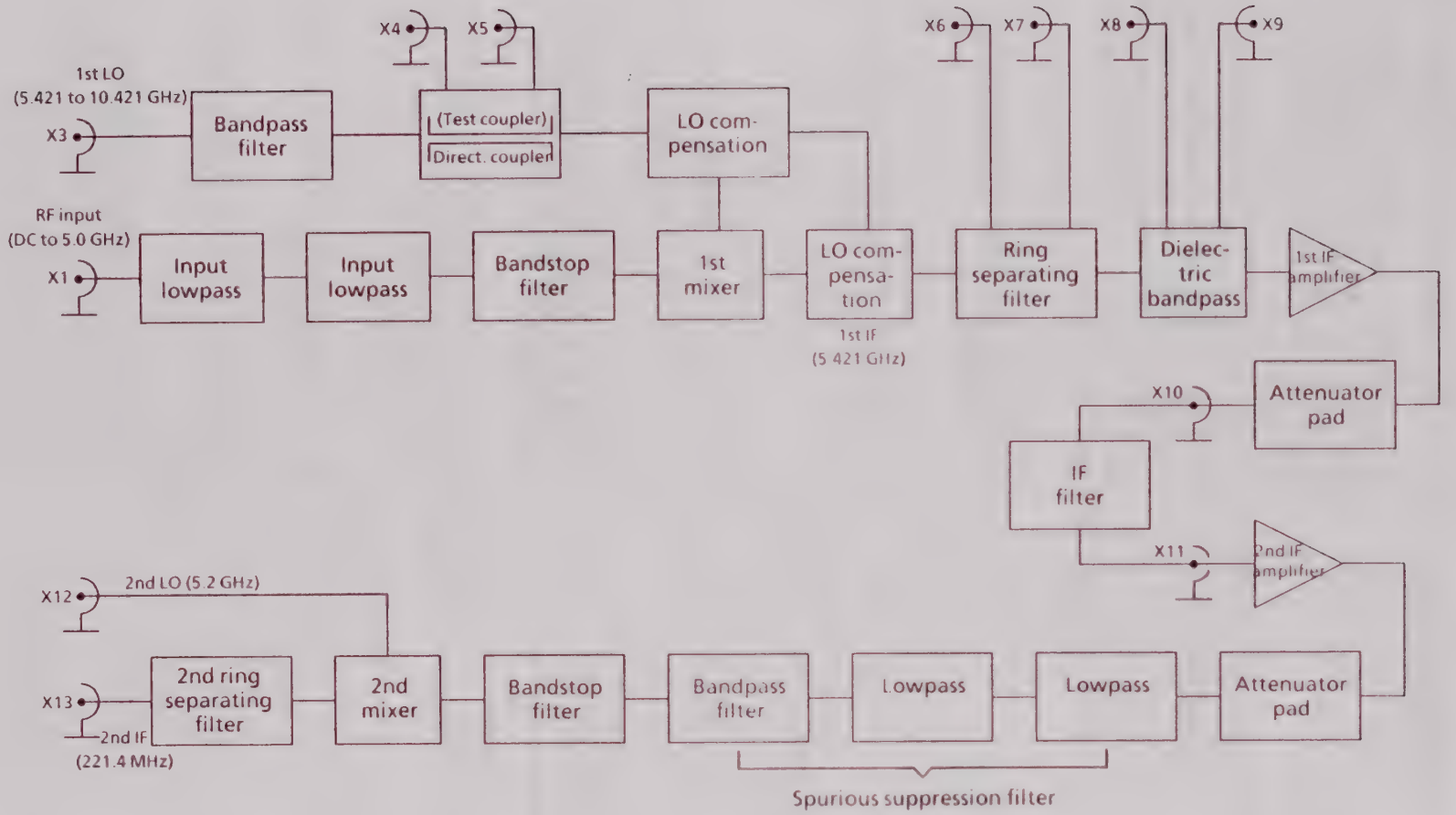

Fig. 6-1 Block diagram "RF module"

6.2 Testing and Adjustment

Preliminary remarks

Required documents:
Circuit diagram and manual

Note! An EEPROM on the Preamplifier 3rd IF module is used for frequency response correction of the module. The two modules are closely coupled with each other. After adjusting the RF module or the RF path of the YIG synchronization module, the EEPROM has to be reprogrammed.

Required supply voltages

+ 15 V	± 5%	0.12 A
-15 V	± 5%	0.05 A

Test equipment

- Network analyzer 40 MHz to 11 GHz
- 3 Synthesizers SWM
- 1 microwave amplifier 5 to 11 GHz or a module YIGSYN
- 1 Power Meter NRV5
- 1 tunable lowpass filter (PTU + 1 filter stage)
- 1 power divider 400 kHz to 5.2 GHz
- Combiner (2 resistor dividers)
- 1 module 2nd LO or 1 synthesizer 5.2 GHz, + 18 dBm
- 1 power supply
- Noise test assembly
- 1 Test Receiver ESVP or Spectrum Analyzer FSA
- 1 RF module reference board

The five-resonator 1st IF filter, the dielectric bandpass, the dielectric band-stop filter as well as the output circuit of the 2nd mixer can be adjusted.
In addition, the suppression of the 1st oscillator at the receive frequency 0 MHz can be set.

For adjustment of the dielectric circuits, the covers must be screwed to the module and should not be opened any more, if possible. For this reason, the order of adjustment suggested here should be observed.

In general, the values can be checked by means of the test equipment indicated. The tests can partly be simplified by means of transmission substrates which can be fitted instead of the mixers and permit transmission measurements without frequency conversion.

6.2.1 Testing the GaAs FET Supply Voltages

Open the top covers above the amplifiers. After switching on the operating voltage, it must be possible to measure the following voltages:

VD1	= 4.0	± 0.2 V	measured at Z2
VG1	= -1.5	± 0.5 V	measured at Z1
VD2	= 8.0	± 0.2 V	measured at Z4
VG2	= -1.5	± 0.5 V	measured at Z3

If this is not the case, measure the timing of the voltages at Z1/Z2 and Z3/Z4 using a storage oscilloscope when switching the operating voltage on and off.

In the case of both amplifiers, the negative gate voltage must be present before the drain voltage and must drop to zero after the drain voltage when switching off.

6.2.2 Adjusting the Output Circuit of the 2nd Mixer

The output circuit of the 2nd mixer includes an acceptor circuit for 110.7 MHz which can be readjusted by means of C32.

For this purpose, unscrew the five-resonator IF filter and apply a signal of 5.3107 GHz to X11. 5.2 GHz with 18 dBm (2nd LO) are applied at X12. The resulting IF is 110.7 MHz. Using C32, adjust for the transmission minimum after X13.

6.2.3 Adjusting the 1st IF Filter

The IF filter must be removed from the module. The adjustment is carried out using a network analyzer. The transmission S21 and the return loss S11 are measured.

Unscrew the filter cover so that the resonators are opened at the front end of the filter. Adjust each resonator on its own without the influence of the adjacent resonators. The adjacent resonators must be put out of operation using damping material.

Measure S11 via a coupling according to Fig. 6-2. If the probe is now held in the position where the cover usually is at the front end of the resonator to be measured, a dip in S11 should be observed on the network analyzer display at the resolution 0.25 dB/div.

Adjust the resonance frequency to 5421.4 MHz using the adjustment screw and then lock the screw.

Adjust all five resonators in succession.

For the final measurement, the filter is closed again and connected to the network analyzer via the SMA connectors. Readjust the adjustment screws of the two outer resonators.

The transmission loss must be approx. 3 dB ±4 dB. The 3-dB bandwidth should be 40 MHz + 6 MHz. The filter edges must be symmetrical to the centre frequency.

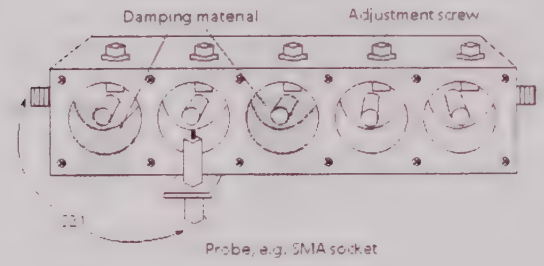

Fig. 6-2 Adjustment of IF filter (measurement using probe)

6.2.4 Measurement of Ring Separating Filter

The transmission loss and the resonance frequency of the ring separating filter are to be measured.

For this purpose, measure the transmission from X6 to X7. S21 = -1.5 dB ±0.5 dB, f0 = 5421.4 MHz, BW (3 dB) >100 MHz.

6.2.5 Adjusting the Dielectric Band-stop Filter

The adjustment can be carried out with the 1st mixer built in using a network analyzer if a dynamic range > 85 dB is provided at 5.4 GHz for transmission measurements. The isolation between the mixer ports and the filter edge of the Cauer lowpass affects the measurement.

In this case, S21 is measured from X1 to X3 at 5.421 GHz with a span of 200 MHz. Using the two adjustment screws in the cover, the two attenuation peaks can be shifted in their frequency. Adjust for maximum attenuation. The peaks should be at 5.419 GHz and 5.423 GHz. The attenuation at 5.421 GHz should be >65 dB.

Otherwise, proceed as follows:
Apply the 1st IF 5.4214 GHz ±25 MHz to X1 using a generator. Apply 10.6214 GHz with 18 dBm to X3 (e.g. 1st LO at max. receive frequency 5.2 GHz and span 0 MHz). The resulting IF of 5.2 GHz ±25 MHz is monitored at X6 using a spectrum analyzer. Using the adjustment screws, peaks can be generated at 5.199 GHz and 5.201 GHz.

Alternatively a transmission measurement can be performed from X1 to X3 or X1 to X6, depending on the transmission substrate used. The peaks are shifted to 5420.4 MHz and 5422.4 MHz.

The LO suppression can be considerably affected at f_{in} = 0 Hz using the dielectric resonators. For this reason, readjustment in the instrument is advisable after mounting the module (see also 6.2.7).

6.2.6 1st IF Amplifier

The amplifier must be measured separately via the sockets X9 and X10.

Measure the gain. For this purpose, turn the adjustment screw for the dielectric resonator until it stops (cover). Since the measurement is performed by feeding the signal via the coupling of the resonator into the amplifier, the network analyzer does not exhibit the matching under operating conditions. The nominal value is |S21| = 4.0 dB ± 0.5dB at the 1st IF.

6.2.7 Adjusting the Dielectric Bandpass

The dielectric bandpass is accessible via connectors X8 and X9. For adjustment, the screw accommodated in the cover above the resonator is used. The screw is self-locking.

The cover is screwed onto the board. X7 is terminated by 50 Ω.

A network analyzer is used to measure the transmission S21 via X8 and X9 at 5.421 GHz. The transmission is adjusted for maximum using the adjustment screw.

Since X8 and X9 are not loaded by the short-circuiting caps, but by the 50-Ω system of the network analyzer, the operating data of the filter can be checked only roughly.

On regular conversion conditions, readjustment is required in the instrument after mounting the module (e.g. adjust converted 100-MHz CAL signal for maximum).

The transmission loss is 1.5 dB ± 4 dB on regular operating conditions. The filter edges are symmetrical to the centre frequency. The 3-dB bandwidth is 40 MHz + 10 MHz.

Using a transmission substrate, the combination of ring separating filter, dielectric bandpass and 1st IF amplifier can be measured from X3 to X10.

6.2.8 2nd IF Amplifier

Use a transmission substrate instead of the 2nd mixer to measure the transmission from X11 to X12. |S21| = + 7.5 dB + 1/-0.5 dB.

6.2.9 LO Suppression

The LO suppression is of particular interest when f_{in} = 0 Hz.

It is determined by suppression of the replaceable 1st mixer, the compensation circuit and by the fine adjustment of the dielectric band-stop filter.

The adjustment of the dielectric resonators is only useful if the suppression is >40 dB before, i.e. the oscillator signal is displayed with <-20 dBm for f_{in} = 0 Hz in the complete instrument.

When adjusting, the IF feedthrough has to be observed simultaneously. In order to meet both requirements, take the average of the adjustment.

The measurement is carried out in the instrument: f_{start} = 0 Hz, f_{stop} > 10 MHz, apply the 1st IF 5421.4 MHz to the input socket. Use the two adjustment screws of the band-stop filter to adjust for maximum suppression of the 1st LO and of the IF feedthrough.

6.2.10 Function Test

The test provides a fast summary of the module functions with the module fitted in the instrument.

Transmission substrates used have to be replaced by the solderable mixers.

The output level at the 2nd IF of 221.4 MHz is measured at socket X13 of the RF module. The input signal is the signal (100 MHz/-20 dBm) of the calibration output. The following setting is selected:

Center Frequency:	100 MHz
Span:	0 MHz
Att.:	10 dB

If this level (-20 dBm) cannot be read out on the display, feed signal directly into socket X1 of the RF module.

If the output level at X13 (-7 dB as opposed to X1) still cannot be obtained, proceed according to the troubleshooting diagram (section 6.3).

6.2.11 Final Test

The manual measurements described merely provide an overview and cannot fully replace a complete automatic measurement which would require a more comprehensive test equipment.

The following are to be measured:

- Conversion loss
- 1st LO suppression
- Noise figure
- 3rd order intercept
- Harmonic distortion
- Reflection
- Spurious response
- Image frequency reception

Make sure that the input level at socket X1 of the RF module remains constant throughout the complete frequency range. The measurements must be made with all covers completely screwed on and with the module adjusted.

6.2.11.1 Conversion Loss

X1: f_{in} = 100 Hz to 5.2 GHz, -10 dBm
X2: 1st LO = f_{in} + 5.4214 GHz, + 18 dBm
X12: 2nd LO = 5.2 GHz, + 18 dBm

Conversion gain: $G_c = L_{x13}$ (2nd IF) - L_{x1} (fin)

Nominal value: G_c = -7 ± 2 dB

6.2.11.2 LO Suppression

The 1st LO is suppressed at the RF port as well as at the IF port by the double-balanced mixer and the compensation circuit. With a setting as in 6.2.11.1 and f_{in} = 0 Hz, a signal of <-2 dBm is to be applied at X13.

6.2.11.3 Noise Figure

Up to 2 GHz, the noise figure of the module can directly be determined using a noise test assembly (e.g. AIL 2075). At higher frequencies, a measurement with frequency conversion has to be selected.

The noise source at X1 outputs broadband noise over the complete input frequency range, the receive frequency is determined by the 1st LO. For the measurement, proceed according to the manual of the noise test assembly.

The noise figure is 16 dB + 2 dB.

6.2.11.4 3rd Order Intercept

Two signals with a slight offset are applied to the input. The non-linear response of the module produces the IP3 products.

To enable these mixture products to pass the IF filters and be measured at X13 at the 2nd IF, the frequency of the 1st LO must be slightly offset.

The following equation applies to the 1st LO:

1st product: 1st LO = 2*f2 - f1 + 5421.4 MHz
2nd product: 1st LO = 2*f1 - f2 + 5421.4 MHz.

The IP3 value is calculated as follows:

IP3 (dBm) = A / (dBm) + delta A / 2 (dBm)
IP3 (dBm) = (Lin + G_c) + (Lin + G_c - Lx13)/2

The value G_c is obtained from the previously measured conversion loss.

The following applies to IP3:
IP3 > 10 dBm 20 MHz to 5.2 GHz.

6.2.11.5 Harmonic Distortion

The measurement is made in an analog manner to the IP3 measurement except that only one signal generator is used which is followed by a tunable lowpass filter.

The lowpass filter is required to suppress the generator harmonics.

The 1st LO is shifted in its frequency in order to convert the d2 products of the 1st mixer to the desired IF.

The 1st LO is set according to the following equation:

1st LO = $2*f_{in}$ + 5421.4 MHz
f_{in} = 20 MHz to 2.6 GHz

The d2 value is calculated as follows:

$d2 = 2 (Lin + G_c) - L_{X13}$.

The value G_c is obtained from the previously measured conversion loss.

The frequency range only covers half of the receive range of the RF module of course.

6.2.11.6 Reflection Measurement

The input impedance of the RF module depends on the setting of the 1st LO. The 1st LO must be set to the test frequency for the correct measurement of S11.

The measurement can be performed using a VSWR bridge or a network analyzer. The 1st LO can be set by a controller or the network analyzer.

The following applies:
S11 (20 MHz < f_{in} < 5.2 GHz) < -10 dB.

6.2.11.7 Spurious Response

The spurious response is known (see table in section 3.2.3.1.3) and can be most easily checked in the adjusted instrument. The value of -110 dBm must not be exceeded (setting see data sheet).

6.2.11.8 Image Frequency Reception

The conversion into the very same IF is made for the case of reception f_{in} + 2 x 1st IF. The input lowpass filters have to make sure that the value corresponds to that in the data sheet.

6.3 Troubleshooting

For troubleshooting, proceed according to the following flowchart.

By unscrewing the five-resonator bandpass filter and due to the test points X4 to X9, the module can be dismounted into signal paths without being opened so that the error can be analyzed quickly.

Having done the repair work, the EEPROM on the Preamplifier 3rd IF module is to be programmed with new correction values.

The mixers are designed as drop-in modules and can be easily replaced by unsoldering.

For particular measurements, the mixers can be replaced by transmission substrates. They permit some measurements to be abbreviated, however, their use is not absolutely necessary.

The unsoldered mixers can be measured separately in an adapter.

Troubleshooting diagram:

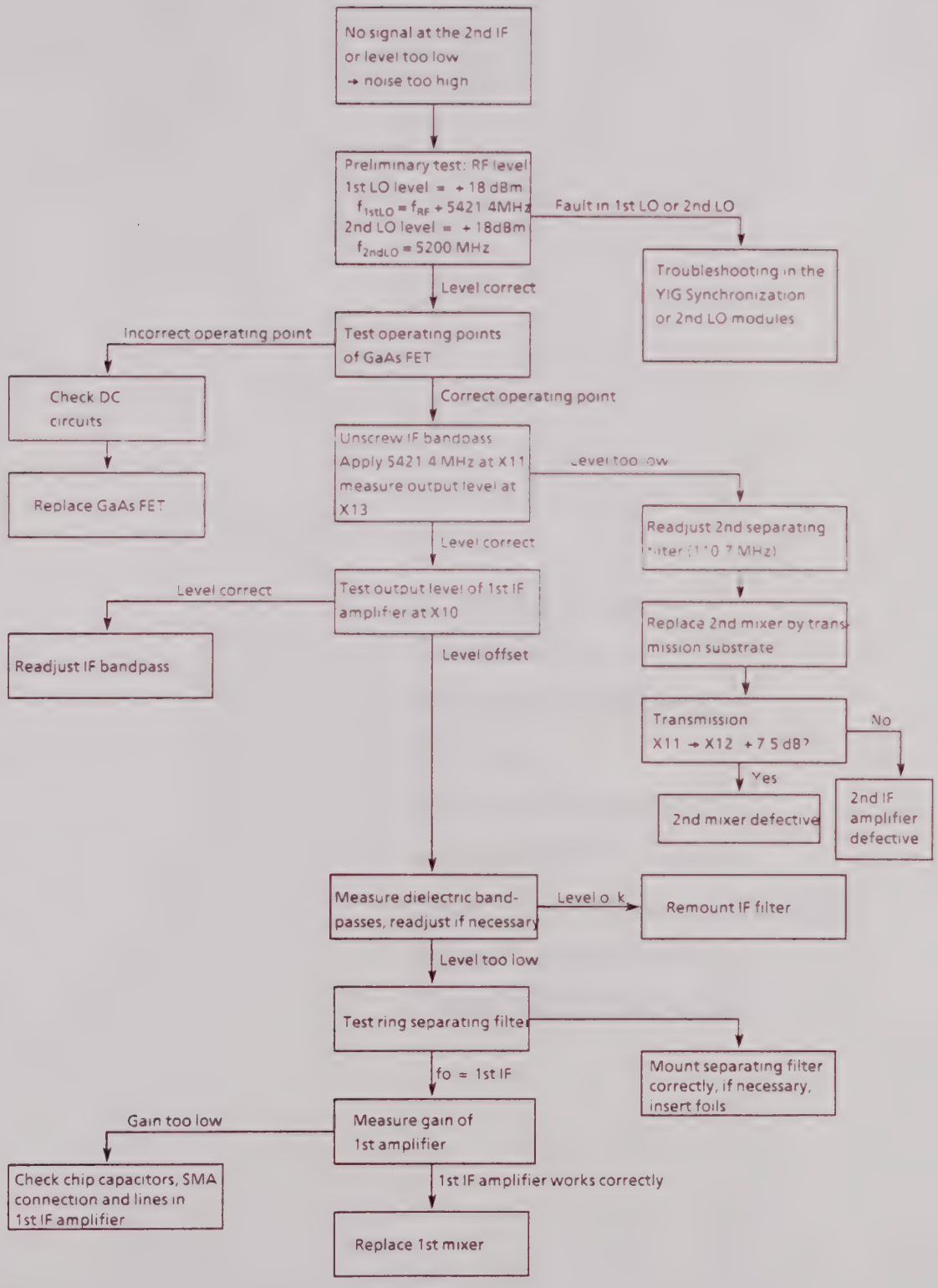

ROHDE&SCHWARZ

Schaltteillisten
Stromläufe
Bestückungspläne
Part lists
Circuit diagrams
Components plans
Listes des pièces détachées
Schémas de Circuit
Plans des composants

(R 29500 Bl 2)
895.1000 Bl. 2

Kennz. Comp.No.	Benennung Designation	Sachnummer Stock No.	Hersteller Manufacturer	Bezeichnung Designation	enthalten in contained in
.	ZUGEH.STROML./CIRC.DIAGR. 848.9511 S				
A321	ED VOLTAGE CONTROLLER	849.0001.02			
A322	ED VOLTAGE CONTROLLER HIERZU STROML.849.0001 S	849.0001.03			
A323	ZE BANDPASS	848.9905			
A324	BD MIXER 1	848.9728			
A325	BD MIXER 2	848.9734			
C11	CC 1,0PF+-0,25PF50VNPO CH CHIP CAPACITOR	CC 099.6770	VITRAMON	VJ0805A1R0CFA	
C12	CC 10NF+-10% 50V W5R CHIP CAPACITOR	CC 093.2115	VITRAMON	VJ0805Y103KFA	
C14	CC 3,0PF+-0,25PF50V NPO C CERAMIC CHIP CAPACITOR	CC 099.8267	VITRAMON	VJ0805A3R0CFA	
C16	CC 1,0PF+-0,25PF50VNPO CH CHIP CAPACITOR	CC 099.6770	VITRAMON	VJ0805A1R0CFA	
C17	CC 10NF+-10% 50V W5R CHIP CAPACITOR	CC 093.2115	VITRAMON	VJ0805Y103KFA	
C19	CC 3,0PF+-0,25PF50V NPO C CERAMIC CHIP CAPACITOR	CC 099.8267	VITRAMON	VJ0805A3R0CFA	
C21	CC 1,0PF+-0,25PF50VNPO CH CHIP CAPACITOR	CC 099.6770	VITRAMON	VJ0805A1R0CFA	
C22	CC 10NF+-10% 50V W5R CHIP CAPACITOR	CC 093.2115	VITRAMON	VJ0805Y103KFA	
C24	CC 3,0PF+-0,25PF50V NPO C CERAMIC CHIP CAPACITOR	CC 099.8267	VITRAMON	VJ0805A3R0CFA	
C26	CC 1,0PF+-0,25PF50VNPO CH CHIP CAPACITOR	CC 099.6770	VITRAMON	VJ0805A1R0CFA	
C27	CC 10NF+-10% 50V W5R CHIP CAPACITOR	CC 093.2115	VITRAMON	VJ0805Y103KFA	
C29	CC 3,0PF+-0,25PF50V NPO C CERAMIC CHIP CAPACITOR	CC 099.8267	VITRAMON	VJ0805A3R0CFA	
C31	CC 15PF+-5% 50V NPO 0805 CERAMIC CHIP CAPACITOR	CC 099.8338	VITRAMON	VJ0805A150JFA	
C32	CT 10PF 25V 3RDX1,5 CAPACITOR	093.3540	KYOCERA	TCR-3H 2,5-10PF	
C33	CC 4,3PF+-0,25PF50V2NPO CAPACITOR	CC 093.5643	VITRAMON	VJ0805A4R3CFA	
L31	LD 100NH10%OR15 0,1A 1206 SMD-MULTILAYER-INDUCTOR	LD 007.4818	TOKO	MLF 3216 D R1 K	
L32	LD 100NH 10% OR15 0,82A MINIATURE CHIP COIL	920.0156	STETTNER	5087 022692	
R4	FJ ABSCHLUSSW.50OHM SMA TERMINATION 50 OHM	FJ 249.7823	SUHNER	65SMA-50-0-1	
R5	FJ ABSCHLUSSW.50OHM SMA TERMINATION 50 OHM	FJ 249.7823	SUHNER	65SMA-50-0-1	
R6	FJ ABSCHLUSSW.50OHM SMA TERMINATION 50 OHM	FJ 249.7823	SUHNER	65SMA-50-0-1	
R7	FJ ABSCHLUSSW.50OHM SMA TERMINATION 50 OHM	FJ 249.7823	SUHNER	65SMA-50-0-1	
R11	RG 1000 OHM+-1%TK100 1206 CHIP RESISTOR	RG 006.7271	DALE	CRCW1206 1,0KOHM F T	
R12	RG 1000 OHM+-1%TK100 1206 CHIP RESISTOR	RG 006.7271	DALE	CRCW1206 1,0KOHM F T	
R15	RG 0,005W470 OHM+-1%0805# RESISTOR	007.9084	ROHRER	RN73E2X 470 OHM-F-1%	
R16	RG 0,05W 10 OHM+-1% 0805# RESISTOR	007.8888	ROHRER	RN73C2X10 OHM-F-1%	
R17	RG 0,005W470 OHM+-1%0805# RESISTOR	007.9084	ROHRER	RN73E2X 470 OHM-F-1%	
R25	RG 0,05W330 OHM+-1% 0805# RESISTOR	007.9061	ROHRER	RN73E2X 330 OHM-F-1%	
R26	RG 0,05W 18 OHM+-1% 0805# RESISTOR	007.8913	ROHRER	RN73C2X 18 OHM-F-1%	
R27	RG 0,05W330 OHM+-1% 0805# RESISTOR	007.9061	ROHRER	RN73E2X 330 OHM-F-1%	
V1	AM ATF10135 4V GAASFET GAAS-FET	848.9634	AVANTEK	ATF10135	F
V1	AX BAT14-112R SCHKY BEAM SCHOTTKY DIODE BEAM LEAD	093.4618	SIEMENS	BAT14-112R	848.9728 F
V1	AX BAT14-112R SCHKY BEAM SCHOTTKY DIODE BEAM LEAD	093.4618	SIEMENS	BAT14-112R	848.9734

ROHDE & SCHWARZ	Äl	Datum Date	Schaltteilliste für Parts list for	Sachnummer Stock Nr.	Blatt Page
	03	1088	BD RF-MODULE	848.9511.01 SA	1+

& alle Rechte vor

Kennz. Comp.No.	Benennung Designation	Sachnummer Stock No.	Hersteller Manufacturer	Bezeichnung Designation	enthalten in contained in
V2	AM FSX52WF 12V GAASFET GAAS FET	806.8998	FUJITSU	FSX52WF	
W10	DX BUCHSENEINHEIT W10	849.0253			
X1	FJ EINBAUBUCHSE SYST.SMA PANEL SOCKET	FJ 911.0105	SUHNER	23SMA-50-032	
X3	FJ EINBAUBUCHSE SYST.SMA PANEL SOCKET	FJ 911.0105	SUHNER	23SMA-50-032	
X4	FJ EINBAUBUCHSE SYST.SMA PANEL SOCKET	FJ 911.0105	SUHNER	23SMA-50-032	
X5	FJ EINBAUBUCHSE SYST.SMA PANEL SOCKET	FJ 911.0105	SUHNER	23SMA-50-032	
X6	FJ EINBAUBUCHSE SYST.SMA PANEL SOCKET	FJ 911.0105	SUHNER	23SMA-50-032	
X7	FJ EINBAUBUCHSE SYST.SMA PANEL SOCKET	FJ 911.0105	SUHNER	23SMA-50-032	
X8	FJ EINBAUBUCHSE SYST.SMA PANEL SOCKET	FJ 911.0105	SUHNER	23SMA-50-032	
X9	FJ EINBAUBUCHSE SYST.SMA PANEL SOCKET	FJ 911.0105	SUHNER	23SMA-50-032	
X10	FJ EINBAUSTECKER SYST.SMA CONNECTOR	FJ 911.0486	SUHNER	13SMA-50-0-32	
X11	FJ EINBAUSTECKER SYST.SMA CONNECTOR	FJ 911.0486	SUHNER	13SMA-50-0-32	
X12	FJ EINBAUBUCHSE SYST.SMA PANEL SOCKET	FJ 911.0105	SUHNER	23SMA-50-032	
X13	FJ EINBAUBUCHSE SYST.SMA PANEL SOCKET	FJ 911.0105	SUHNER	23SMA-50-032	
X28	FJ KURZSCHLUSSK.SYSTEMSMA	FJ 249.7575	RADIALL	SMA125852	
X29	FJ KURZSCHLUSSK.SYSTEMSMA	FJ 249.7575	RADIALL	SMA125852	
Z1	LD PI-FILTER 60DB/10GHZ # PI-FILTER	849.3023	TUSONIX	4205-001	
Z2	LD PI-FILTER 60DB/10GHZ # PI-FILTER	849.3023	TUSONIX	4205-001	
Z3	LD PI-FILTER 60DB/10GHZ # PI-FILTER	849.3023	TUSONIX	4205-001	
Z4	LD PI-FILTER 60DB/10GHZ # PI-FILTER	849.3023	TUSONIX	4205-001	
Z5	LD PI-FILTER 60DB/10GHZ # PI-FILTER	849.3023	TUSONIX	4205-001	
Z6	LD PI-FILTER 60DB/10GHZ # PI-FILTER	849.3023	TUSONIX	4205-001	
					- ENDE -

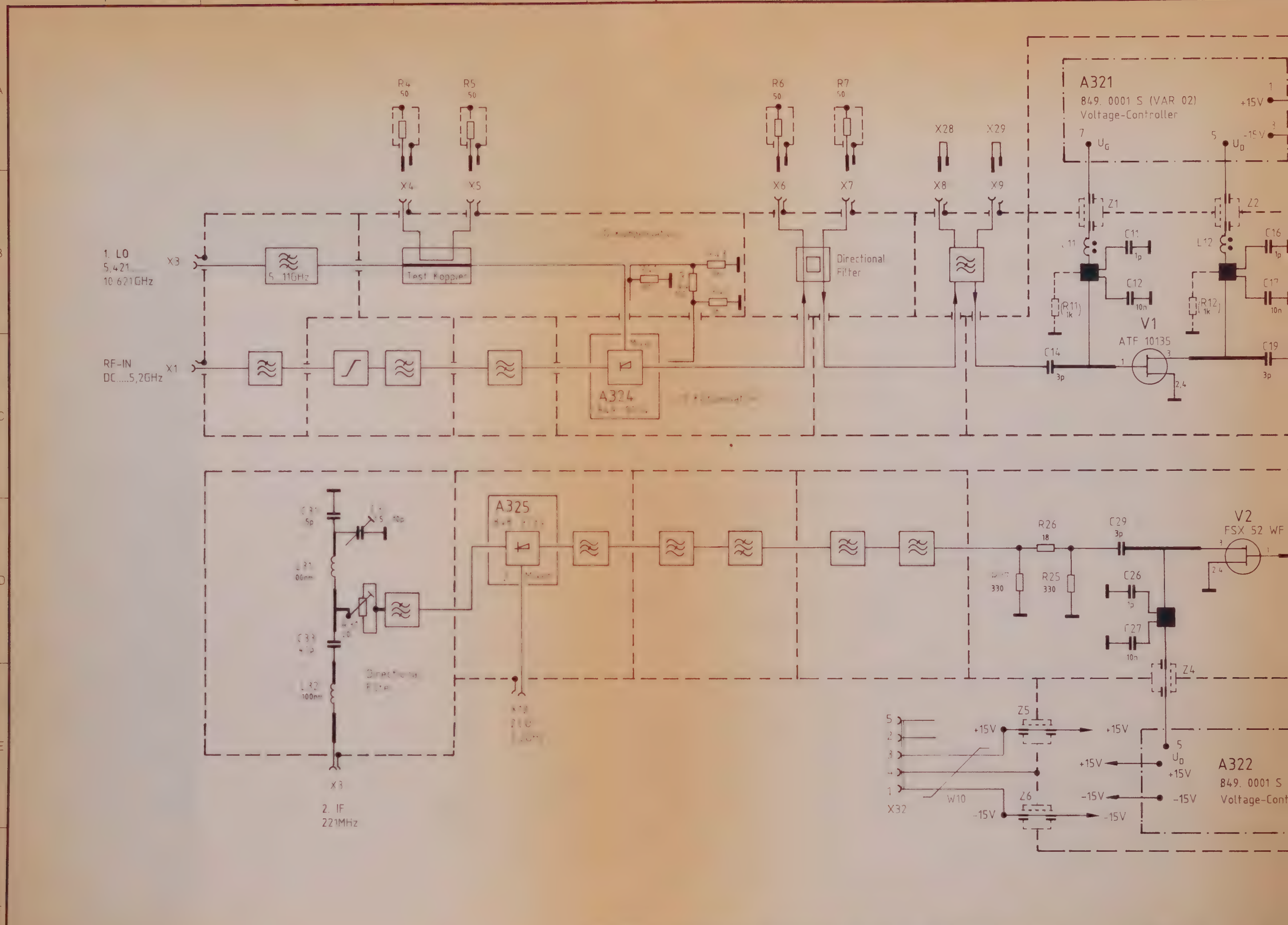

ROHDE&SCHWARZ	A	37 074 (18)	10 88	HW					1KEF	Tag	Name
	B	37 086 (10)	06.89	HW					Bearb	07.88	HW
	C	37 086 (32)	01 90	HW					Gepr		
	Änd. Zust.	Änderungs Mitteilung	Datum	Name	Änd. Zust.	Änderungs Mitteilung	Datum	Name	Norm		

Für diese Unterlage behalten wir uns alle Rechte vor

Zeichn.-Nr. 848. 9511 S

8 9 10

A B C D E F

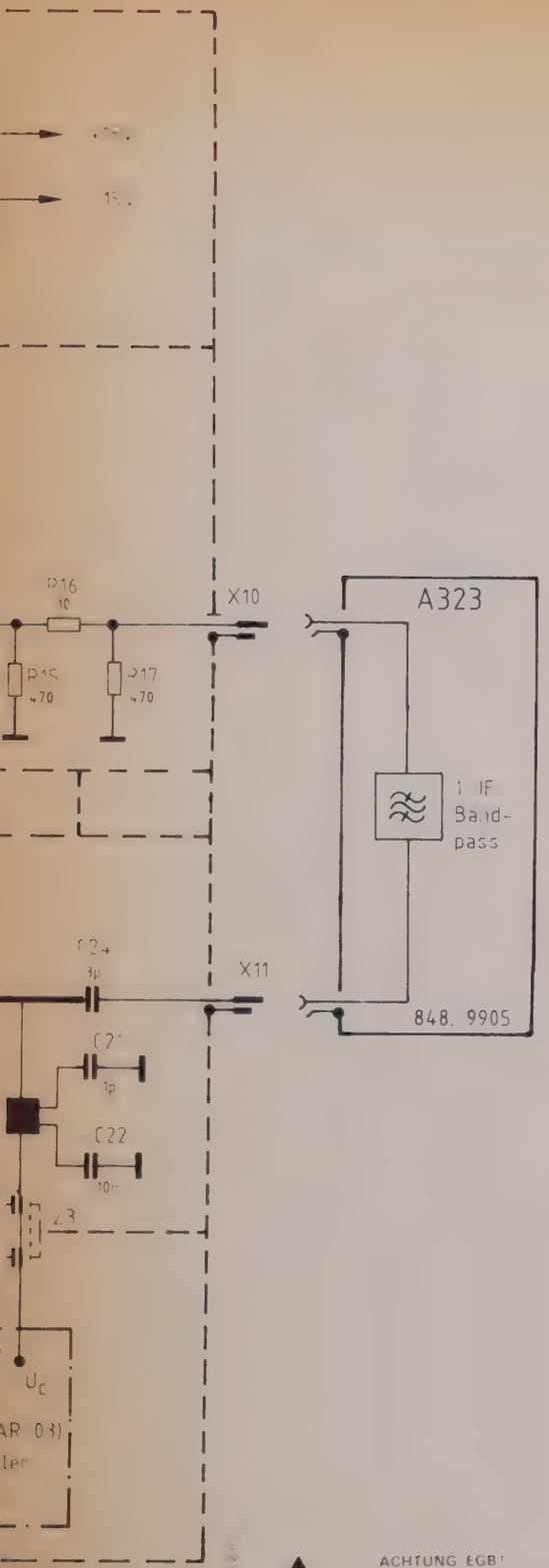

ACHTUNG EGB!
Elektrostatisch gefährdete Bauelemente erfordern eine besondere Handhabung
ATTENTION ESD!
Electrostatic sensitive devices require a special handling

√ARIANTENERKLÄRUNG/VERSION:
VAR 02 = GRUNDAUSFÜHRUNG
MOD 02 = BASIC VERSION

RF-MODULE	Zeichn. Nr 848. 9511 S	Blatt-Nr 1 v 1 Bl.
FSB	reg. v 848. 0550 V	erste Z 848. 0550

ROHDE&SCHWARZ

SERVICE DOCUMENTATION

Preamplifier 3rd IF

848.8009.02

Contents

		Page
6	**Service Instructions Preamplifier 3rd IF**	6.1
6.1	**Function Description**	6.1
6.1.1	Input Amplifier	6.1
6.1.2	Switched Attenuation	6.1
6.1.3	Step Gain Amplifier	6.1
6.1.4	Variable Gain Amplifier	6.1
6.1.5	8 dB Amplifier	6.2
6.1.6	Buffer Amplifier	6.2
6.1.7	Detectors 1 and 2	6.2
6.1.8	Overrange Detektor	6.2
6.1.9	Frequency Response Correction	6.2
6.1 10	µP Interface	6.3
6.2	**Testing and Adjustment**	6.6
6.2.1	Testing the Control	6 6
6.2.2	Adjusting and Testing the A/D Converter	6.6
6.2.3	Testing the D/A Converter	6.7
6.2.4	Testing and Adjusting the Variable Gain Amplifier	6.7
6.2.5	Adjusting the Gain	6.7
6.2.6	Testing Detectors 1 and 2	6.7
6.2.7	Measuring the Intermodulation Ratio	6.8
6.3	**Troubleshooting**	6.8

Parts lists
Circuit diagrams
Component location plans

6 Service Instructions Preamplifier 3rd IF

(See circuit diagram 848.8009 S)

6.1 Function Description

This module amplifies the 21.4 MHz IF signal by typically 8 to 28 dB. It is switchable in 5 dB steps and can be continuously adjusted for

- compensation of gain tolerances in the previous stages,
- compensation of temperature-dependent gains, as well as
- compensation of the RF frequency response of the RF module.

6.1.1 Input Amplifier

A lowpass filter with a cut-off frequency of approx. 50 MHz, which attenuates the 200 MHz component from the 3rd converter, is followed by a low-noise amplifier (V50) with transformer negative feedback. V52 controls the operating point of amplifier V50.

6.1.2 Switched Attenuation

Two 5 dB attenuators are switched in series, which can be switched on or by-passed.

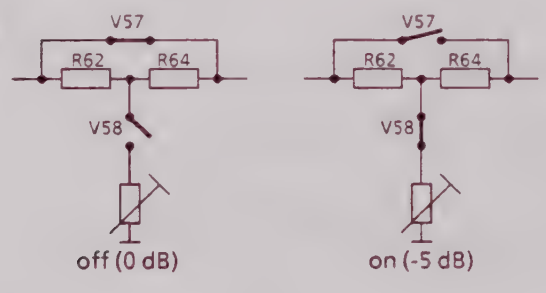

R66 and R74 are used for adjustment.

6.1.3 Step Gain Amplifier

V62, V64 and V65 form an inverting operational amplifier. Its gain can be adjusted using feedback resistor R86

V64 conducts:

$$A \approx \frac{(R84 + R86) \parallel R87}{R77} - 6\,dB$$

V64 blocks:

$$A \approx \frac{R84 + R86}{R77} - 6\,dB$$

The 10 dB step is adjusted using R86

6.1.4 Variable Gain Amplifier

V66, V73 and V74 form an inverting operational amplifier. Its gain can be adjusted using the RF resistance of PIN diodes V67 to V71.

Amplification:

$$A \approx \frac{R\,(V67\ to\ V71)}{R92} - 6\,dB$$

The amplification is influenced by:

a) the output voltage of the frequency response correction,

b) temperature compensation voltage (V2, V5),

c) manual setting (R144, R147).

(Using D9, two settings can be selected under item b) and c).)

These 3 signals are summed up in N2-B, suitably shaped in an e-function network and then control the current by PIN diodes V67 to V71 via current source V4, N4-A.

By means of the e-function network (V3, N4-B), a linear relationship is obtained between amplification A [dB] and input voltage V_I [V].

6.1.5 8 dB Amplifier

V77, V78 and V79 form an inverting operational amplifier. Its gain is defined by feedback resistor R115.

Amplification:

$$A \approx \frac{R115}{R112} - 6\,dB$$

V83 to V87 limit the output level to < 10 dBm.

6.1.6 Buffer Amplifier

Buffer amplifier V75, V76 provides the low-feedback coupling of the IF signals to connector IF OUTPUT 21.4 MHz at the rear of the instrument.

6.1.7 Detectors 1 and 2

Detectors are fitted at the IF input and IF output of the module, which can be coupled by the microprocessor to the signal path during the self-test but are otherwise not active.

When switched on, V54 (V88) is powered via V1 and V53 (V87).

6.1.8 Overrange Detektor

The overrange detector consists of a comparator with flip-flop and sets line LE3IF LOW if the level at X1 exceeds - 2 dBm.

Reset is effected by HIGH at line INTRES.

6.1.9 Frequency Response Correction

A/D converter U1 converts the tuning voltage of the 1st LO (YIG Oscillator) to a binary data word to address memory D1 (EEPROM), which contains the correction value for the respective receive frequency.

This data word is again D/A-converted by U2, N3-A and controls the variable gain amplifier.

D2 controls the A/D converter U1 such that it functions automatically and generates a memory pulse so that U2 can store the currently addressed correction value.

R4, R5 and R6 program the operating mode of A/D converter U1, which is read in by bus AK0-AK9 (then at high impedance) before each converter cycle (approx. 6 µs).

8 correction data sets can be selected via AK10-AK12.

The following operating modes are possible:

a) **Continuous conversion**

U1 starts with a positive edge pulse at D6-10. U2 is activated by LOW level at D6-15. Data word 6_{10} is written in D6.

The conversion stops and the last correction value remains stored in U2 if LOW level is applied to D6-10 and HIGH level to D6-15. Data word 10_{10} is written in D6.

b) **Addressing of memory D1 (EEPROM) directly from microprocessor bus**

U1 is stopped by D6-10 being LOW. Data word 2_{10} is written in D6. The memory can be addressed via D3, D4 and D8 and a memory pulse is generated for U2 via D2-A by writing to D5. D6-2 must be LOW so that D1 is active and D5 is HIGH-Z.

c) **Correction data directly from microprocessor bus to U2**

D1 is switched HIGH-Z. The memory pulse for U2 is obtained via D2-A by writing the required data word to D5 and the data word is taken from D5 to U2. Data word 3_{10} is written in D6, then the required byte is written in D5.

d) **Programming D1**

Proceed as under item c) to transmit the byte to be programmed, then address D1 via D3 and D4.

Set D6-7 ($\overline{PGM}$) LOW for approx. 10 ms. Data word 1_{10} is written in D6.

6.1.10 µP Interface

The module functions are controlled by the microprocessor via latches D3, D4, D5, D6 and D8, as well as the address decoder D7.

A control sequence is read in using the following pulse sequence.

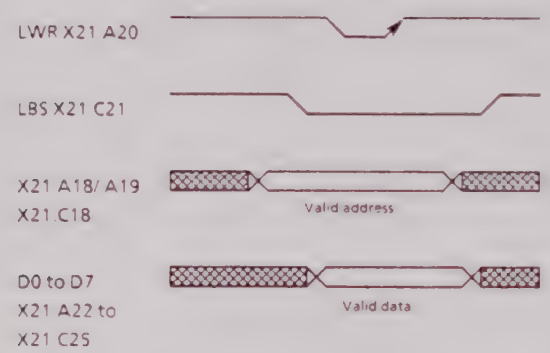

D8 ≙ Address 0			
D0	0	Attenuator 1	0 dB
	1		-5 dB
D1	0	Attenuator 2	0 dB
	1		-5 dB
D2	0	Step Gain Amplifier	+ 10 dB
	1		0 dB
D3	0	RF 1	R144
	1	RF 1	R147
D4	0	Detector 1 and 2	active
	1		off
D5	Select EEPROM memory range		
D6			
D7			

D6 ≙ Address 1		
D0	0	EEPROM active; D5 High-Z
	1	D5 active; EEPROM High-Z
D1	0	Programming pulse for D1; $\tau \geq 10$ ms
	1	—
D2	0	A/D converter stop; D3, D4 active
	↓	A/D converter start
	1	A/D Converter active; D3, D4 High-Z
D3	0	D/A Converter U2 active
	1	D/A Converter U2 latch

D5 ≙ Address 2

If D6 was appropriately set before, the D/A converter can be written to via D5

0_{10} ≙ max. gain
255_{10} ≙ min. gain
$V_{max} - V_{min}$ = 10 dB

D3 ≙ Address 4; D4 ≙ Address 3

If D6 was appropriately set before, EEPROM D1 can be addressed via D3 and D4.

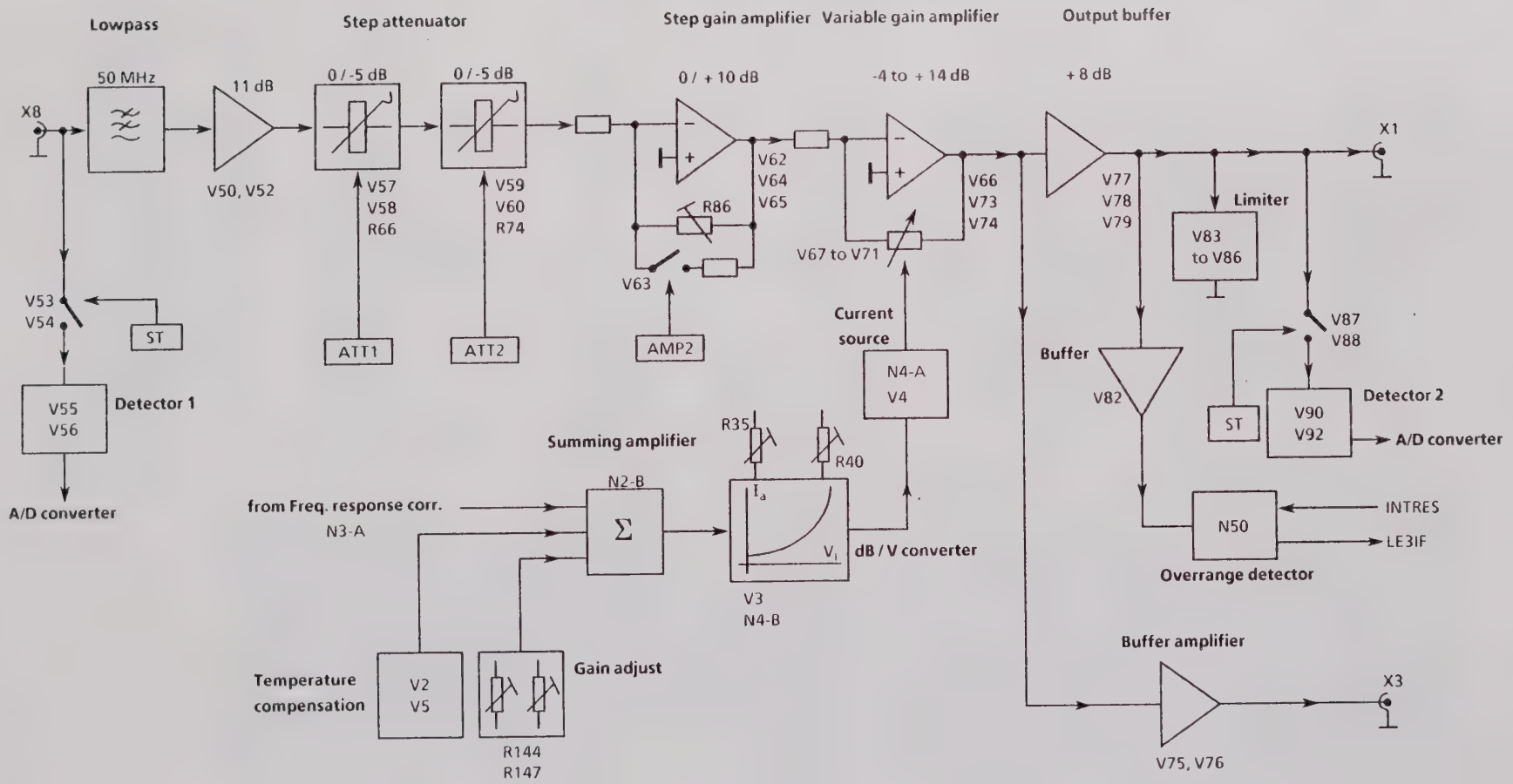

Fig. 5-1 Block diagram of the preamplifier 3rd IF (part 1)

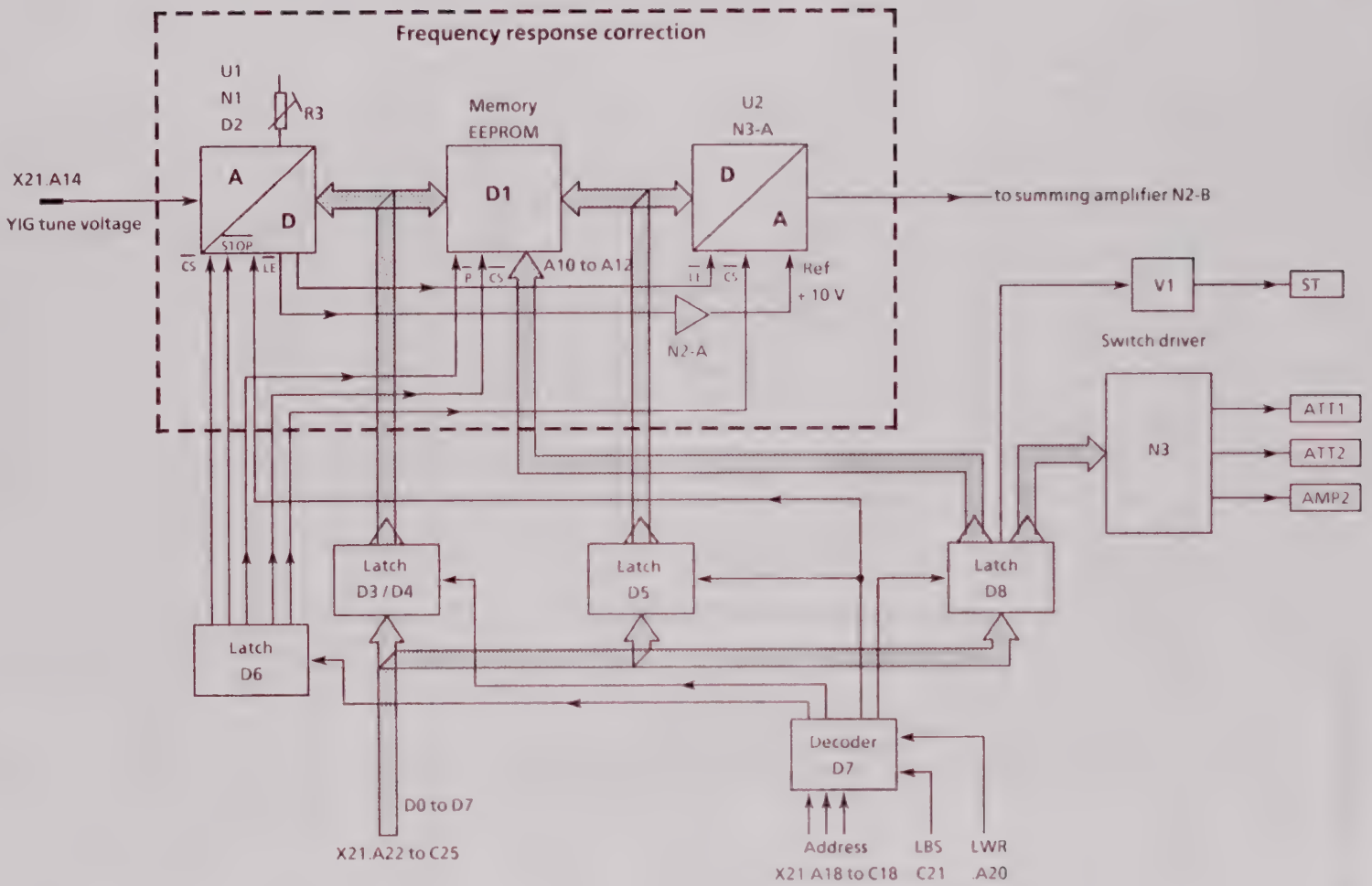

Fig. 5-2 Block diagram of the preamplifier 3rd IF (part 2)

6.2 Testing and Adjustment

6.2.1 Testing the Control

Enter data according to the following table and measure voltages using DVM:

Address	Data	Test point	Measurement value
—	—	X15-1	-5 V ±0.2 V
		X15-13	+2.2 to +2.3 V
		X15-2	+2.5 ±0.2 V
		X15-12	+10 V ±0.5 V
		X15-8	-3 V ±0.2 V
		X15-9	-3 V ±0.2 V
0	0	X15-3	+4.5 V to +5 V
0	16	X15-3	-9 V ±1 V
0	16	X15-4	+10 V to +15 V
		X15-5	+10 V to +15 V
		X15-6	+10 V to +15 V
0	23	X15-4	-10 V to -15 V
		X15-5	-10 V to -15 V
		X15-6	-10 V to -15 V
1	3	-----	-----
2	0	X15-11	0 V ±0.1 V
2	255	X15-11	-10 V ±0.2 V

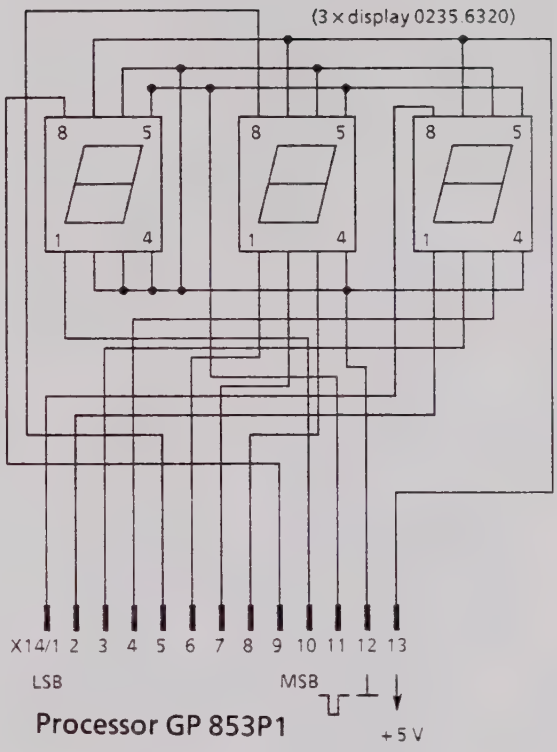

Fig. 5-3 Decoder circuit

6.2.2 Adjusting and Testing the A/D Converter

- Enter service function 1.34.02.10, then service function 1.34.02.6.
- Connect decoder (see following circuit) to X14.
- Apply a voltage of + 9.995 V ± 2 mV to X21. A14 and adjust decoder display using R3 such that just the change 3FE → 3FF is obtained.
- Following replacement of the A/D converter U1, trimming of the cycle time is necessary.
- To this end, connect an oscilloscope to X16, and enter SF 1.34.02.10, then SF 1.34.02.6 Adjust the cycle time to T_Z = 11 to 12 µs using C3 (cf.Fig. 5-4).

  C3 of smaller value → T_Z is decreased;
  C3 of higher value → T_Z is increased.

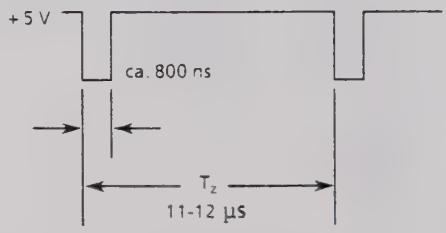

Fig. 5-4 Cycle time of A/D converter U1

6.2.3 Testing the D/A Converter

- Enter service functions 1.34.01.16, 1.34.02.3 and 1.34.03.0.
- Measure voltage at X15-7 (U1) and store.
- Enter service function 1.34 03 255 and measure difference in voltage at X15-7.
  Nominal value: 5.5 V ± 0.1 V
- Enter service function 1.34.03.230 and adjust voltage at X15-7 to +7.2 V ±0.1 V using R144.
- Enter service function 1.34.01.24 and adjust voltage at X15-7 to +7.2 V ±0.1 V using R147.

6.2.4 Testing and Adjusting the Variable Gain Amplifier

- Apply signal of 21.4 MHz, - 15 dBm to X52/3
- Connect RF voltmeter to X54/2.
- Terminate X54/3, X52/2 and X8 by 50 Ω.
- Remove jumper from X12/1-2.
- Apply dc voltage to X12/2.
- Check and adjust the values measured at X54/2 according to the following table.

V (X12/2) [± 10 mV]	Value measured at X54/2	Adjustment
0 V	-1 dBm ± 0.05	R40
+ 10 V	-19 dBm ± 0.05 Store measured value Display in ΔdB	R35
+9 V	+1.8 ± 0.2 dB	—
+8 V	+3.6 ± 0.2 dB	—
+7 V	+5.4 ± 0.2 dB	—
+6 V	+7.2 ± 0.2 dB	—
+5 V	+9 ± 0.2 dB	—
+4 V	+10.8 ± 0.2 dB	—
+3 V	+12.6 ± 0.2 dB	—
+2 V	+14.4 ± 0.2 dB	—
+1 V	+16.2 ± 0.2 dB	—
0 V	+18.0 ± 0.2 dB	—

6.2.5 Adjusting the Gain

- Apply signal of 21.4 MHz to X8.
- Connect RF voltmeter to X1.
- Enter service functions 1.34.01.20, 1.34.02.3 and 1.34.03.230
- Adjust signal generator level and module according to the following table

Signal generator level [dBm]	Data word → addr. 1	Measured value	Adjustment
-30	20	-10 ± 1 dBm Store measured value; Display in ΔdB	—
-40	16	0 ± 0.02	R86
-25	21	0 ± 0.02	R66
-20	23	0 ± 0.02	R74
-35	17	0 ± 0.1	—

- Connect RF voltmeter to X3
  Measured value: -8 ± 1 dB

6.2.6 Testing Detectors 1 and 2

- Apply signal of 21.4 MHz to X8.
- Terminate X1 by 50 Ω.
- Enter service functions 1.34.01.7, 1.34.02.3 and 1.34.03.230.
- Adjust signal generator level according to the following table and measure voltages at X21.A16 and X21.A17 using DVM.

Signal generator level	Measured value	
	X21.A16	X21.A17
-14 dBm	115 mV ± 10 mV	296 mV ± 20 mV
-24 dBm	28 mV ± 3 mV	82 mV ± 10 mV
-34 dBm	—	18 mV ± 2 mV

6.2.7 Measuring the Intermodulation Ratio

- Enter service functions 1.34.01.23, 1.34.02.3 and 1.34.03.230.
- Test setup as shown below. Set the signal generator level ($level_0$) such that 2 x (- 5 dBm) are measured after the 3 dB coupler.

Test setup:

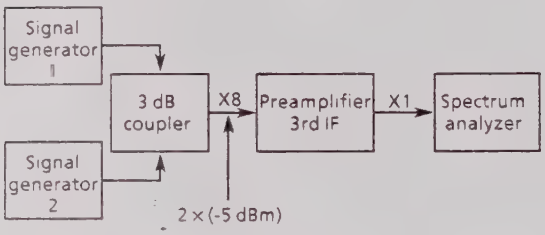

Settings:

Signal generator 1 (SMK)
21.350 MHz
RCL.71
-1 dBm

Signal generator 2 (SMK)
21.450 MHz
RCL.71
-1 dBm

Spectrum analyzer (FSA)
Center frequency
21.4 MHz
Span 400 kHz
Ref. level -5 dBm
Low distortion

- Adjust the module according to the following table and measure intermodulation ratio.

Applied to	Signal generator level [dBm]	Service function 1.34.01.xx	Intermodulation
X8	P_0 -9	23	>68 dB
X8	P_0 -14	21	>72 dB
X8	P_0 -19	20	>75 dB
X8	P_0 -24	17	>75 dB
X8	P_0 -29	16	>75 dB

6.3 Troubleshooting

- Check dc operating points of amplifiers according to the circuit diagram.
- Test functions of the step attenuator and the step gain amplifier (dc test).
  Diode voltages (forward-biased):
  approx. 0.8 V
  Diode voltages (reverse-biased):
  >10 V
- Test function of A/D converter (see section 6.2.2).

ROHDE&SCHWARZ

Schaltteillisten
Stromläufe
Bestückungspläne

Part lists
Circuit diagrams
Components plans

Listes des pièces détachées
Schémas de Circuit
Plans des composants

(R 29500 Bl 2)
0995.1000 Bl. 2

Kennz. Comp.No.	Benennung Designation	Sachnummer Stock No.	Hersteller Manufacturer	Bezeichnung Designation	enthalten in contained in
.	ZUGEH.STROML./CIRC.DIAGR. 848.8009 S				
C1	CE 100UF-10+50% 16V 9X13 ELECTROLYTIC CAPACITOR	CE 006.7165	ROEDERST	EK 00CB 310 D	
C2	CK 1UF+-10%50V5RM MKT CAPACITOR	CK 099.2998	WIMA	MKS2/50/1UF/10%	
C3	CK 1.0NF +-1% 100V RM5 KP POLYPROPYLENE CAPACITOR	CK 007.7598	ROE	KP1830-210/011-R	
C4	CK 100NF+-5%63V5RM MKT CAPACITOR	CK 099.2930	WIMA	MKS/2/63/0.1UF/5%	
C5	CE 1UF -10+50% 63V 9X13 ELECTROLYTIC CAPACITOR	CE 022.7650	ROEDERST	ELKOEK10/63	
C6	CK 100NF+-5%63V5RM MKT CAPACITOR	CK 099.2930	WIMA	MKS/2/63/0.1UF/5%	
C7	CK 100NF+-5%63V5RM MKT CAPACITOR	CK 099.2930	WIMA	MKS/2/63/0.1UF/5%	
C9	CK 100NF+-5%63V5RM MKT CAPACITOR	CK 099.2930	WIMA	MKS/2/63/0.1UF/5%	
C10	CK 100NF+-5%63V5RM MKT CAPACITOR	CK 099.2930	WIMA	MKS/2/63/0.1UF/5%	
C12	CC 150PF+-2%5X6N750 CAPACITOR	CC 087.6929	VALVO	2222 678 58151	
C13	CC 150PF+-2%5X6N750 CAPACITOR	CC 087.6929	VALVO	2222 678 58151	
C14	CC 33PF+-2%4X5NP0 CAPACITOR	CC 087.6487	VALVO	2222 678 10339	
C15	CC 47PF+-2%5X6NP0 CAPACITOR	CC 087.6506	VALVO	2222 678 10479	
C16 ..19	CC 10NF-20+50%7X8R400C CAPACITOR	CC 087.7525	VALVO	2222 63051 64051103	
C20	CK 1UF+-10%50V5RM MKT CAPACITOR	CK 099.2998	WIMA	MKS2/50/1UF/10%	
C22	CC 10NF-20+50%7X8R4000 CAPACITOR	CC 087.7525	VALVO	2222 63051 64051103	
C23	CC 10NF-20+50%7X8R4000 CAPACITOR	CC 087.7525	VALVO	2222 63051 64051103	
C24	CC 10NF-20+50%7X8R4000 CAPACITOR	CC 087.7525	VALVO	2222 63051 64051103	
C43	CC 15PF+-2%3X4NP0 CAPACITOR	CC 087.6441	VALVO	2222 678 10159	
C45	CC 10NF-20+50%7X8R4000 CAPACITOR	CC 087.7525	VALVO	2222 63051 64051103	
C46	CC 10NF-20+50%7X8R4000 CAPACITOR	CC 087.7525	VALVO	2222 63051 64051103	
C47	CC 10NF-20+50%7X8R4000 CAPACITOR	CC 087.7525	VALVO	2222 63051 64051103	
C48	CC 47PF+-2%5X6NP0 CAPACITOR	CC 087.6506	VALVO	2222 678 10479	
C49	CC 47PF+-2%5X6NP0 CAPACITOR	CC 087.6506	VALVO	2222 678 10479	
C50	CC 10NF+-10%50V X7R 1206 CERAMIC CHIP CAPACITOR	CC 099.8521	VITRAMON	VJ1206 Y 103 K FAT	
C52	CC 10NF+-10%50V X7R 1206 CERAMIC CHIP CAPACITOR	CC 099.8521	VITRAMON	VJ1206 Y 103 K FAT	
C53	CC 6.8PF+-0.25PF50V NP0 CERAMIC CHIP CAPACITOR	CC 007.8236	VITRAMON	VJ1206 A 6R8 C FAT	
C54	CC 10NF-20+50%7X8R4000 CAPACITOR	CC 087.7525	VALVO	2222 63051 64051103	
C55	CK 22ONF+-5%63V5RM MKT CAPACITOR	CK 099.2952	WIMA	MKS2/63/0.22UF/5%	
C56	CC 10NF-20+50%7X8R4000 CAPACITOR	CC 087.7525	VALVO	2222 63051 64051103	
C57	CC 10NF+-10%50V X7R 1206 CERAMIC CHIP CAPACITOR	CC 099.8521	VITRAMON	VJ1206 Y 103 K FAT	
C58	CC 10NF-20+50%7X8R4000 CAPACITOR	CC 087.7525	VALVO	2222 63051 64051103	
C59	CC 10NF-20+50%7X8R4000 CAPACITOR	CC 087.7525	VALVO	2222 63051 64051103	
C60	CC 10NF-20+50%7X8R4000 CAPACITOR	CC 087.7525	VALVO	2222 63051 64051103	
C61	CC 10PF+-0.25PF3X4NP0 CAPACITOR	CC 087.6429	VALVO	2222 678 09109	
C62	CC 10NF+-10%50V X7R 1206 CERAMIC CHIP CAPACITOR	CC 099.8521	VITRAMON	VJ1206 Y 103 K FAT	
C63	CC 10NF-20+50%7X8R4000 CAPACITOR	CC 087.7525	VALVO	2222 63051 64051103	

Für diese Unterlage behalten wir alle Rechte vor

Kennz. Comp.No.	Benennung Designation	Sachnummer Stock No.	Hersteller Manufacturer	Bezeichnung Designation	enthalten in contained in
C64	CC 10NF+-10%50V X7R 1206 CERAMIC CHIP CAPACITOR	CC 099.8521	VITRAMON	VJ1206 Y 103 K FAT	
C65	CC 10NF-20+50%7X8R4000 CAPACITOR	CC 087.7525	VALVO	2222 63051 64051103	
C66	CC 10NF-20+50%7X8R4000 CAPACITOR	CC 087.7525	VALVO	2222 63051 64051103	
C67	CC 10NF-20+50%7X8R4000 CAPACITOR	CC 087.7525	VALVO	2222 63051 64051103	
C68	CC 10NF+-10%50V X7R 1206 CERAMIC CHIP CAPACITOR	CC 099.8521	VITRAMON	VJ1206 Y 103 K FAT	
C69	CC 10NF-20+50%7X8R4000 CAPACITOR	CC 087.7525	VALVO	2222 63051 64051103	
C70	CC 10NF-20+50%7X8R4000 CAPACITOR	CC 087.7525	VALVO	2222 63051 64051103	
C71	CC 1PF+-0,25PF50V NP01206 CERAMIC CHIP CAPACITOR	CC 099.8667	VITRAMON	VJ1206 A 1R0 C FAT	
C72	CC 10NF+-10%50V X7R 1206 CERAMIC CHIP CAPACITOR	CC 099.8521	VITRAMON	VJ1206 Y 103 K FAT	
C73	CC 10NF-20+50%7X8R4000 CAPACITOR	CC 087.7525	VALVO	2222 63051 64051103	
C74	CC 10NF+-10%50V X7R 1206 CERAMIC CHIP CAPACITOR	CC 099.8521	VITRAMON	VJ1206 Y 103 K FAT	
C75	CC 10NF+-10%50V X7R 1206 CERAMIC CHIP CAPACITOR	CC 099.8521	VITRAMON	VJ1206 Y 103 K FAT	
C76	CC 10NF-20+50%7X8R4000 CAPACITOR	CC 087.7525	VALVO	2222 63051 64051103	
C77	CC 10NF-20+50%7X8R4000 CAPACITOR	CC 087.7525	VALVO	2222 63051 64051103	
C78	CC 10NF+-10%50V X7R 1206 CERAMIC CHIP CAPACITOR	CC 099.8521	VITRAMON	VJ1206 Y 103 K FAT	
C79	CC 10NF+-10%50V X7R 1206 CERAMIC CHIP CAPACITOR	CC 099.8521	VITRAMON	VJ1206 Y 103 K FAT	
C80	CC 10NF-20+50%7X8R4000 CAPACITOR	CC 087.7525	VALVO	2222 63051 64051103	
C81	CC 1NF+-10%50VX7R 1206 CERAMIC CHIP CAPACITOR	CC 099.8438	VITRAMON	VJ1206Y102KFA	
C82	CC 10NF-20+50%7X8R4000 CAPACITOR	CC 087.7525	VALVO	2222 63051 64051103	
C84	CC 10NF+-10%50V X7R 1206 CERAMIC CHIP CAPACITOR	CC 099.8521	VITRAMON	VJ1206 Y 103 K FAT	
C85	CC 10NF-20+50%7X8R4000 CAPACITOR	CC 087.7525	VALVO	2222 63051 64051103	
C86	CC 10NF+-10%50V X7R 1206 CERAMIC CHIP CAPACITOR	CC 099.8521	VITRAMON	VJ1206 Y 103 K FAT	
C87	CC 10NF+-10%50V X7R 1206 CERAMIC CHIP CAPACITOR	CC 099.8521	VITRAMON	VJ1206 Y 103 K FAT	
C88	CC 10NF+-10%50V X7R 1206 CERAMIC CHIP CAPACITOR	CC 099.8521	VITRAMON	VJ1206 Y 103 K FAT	
C89	CC 10NF-20+50%7X8R4000 CAPACITOR	CC 087.7525	VALVO	2222 63051 64051103	
C90	CC 10NF-20+50%7X8R4000 CAPACITOR	CC 087.7525	VALVO	2222 63051 64051103	
C91	CC 220PF+-1%50V NP0 1206 CERAMIC CHIP CAPACITOR	CC 099.8850	VITRAMON	VJ1206 A 221 F FAT	
C93	CC 10NF-20+50%7X8R4000 CAPACITOR	CC 087.7525	VALVO	2222 63051 64051103	
C94	CC 10NF-20+50%7X8R4000 CAPACITOR	CC 087.7525	VALVO	2222 63051 64051103	
C96	CC 10NF+-10%50V X7R 1206 CERAMIC CHIP CAPACITOR	CC 099.8521	VITRAMON	VJ1206 Y 103 K FAT	
C97	CC 10NF-20+50%7X8R4000 CAPACITOR	CC 087.7525	VALVO	2222 63051 64051103	
C99	CC 10NF+-10%50V X7R 1206 CERAMIC CHIP CAPACITOR	CC 099.8521	VITRAMON	VJ1206 Y 103 K FAT	
C100	CC 10NF+-10%50V X7R 1206 CERAMIC CHIP CAPACITOR	CC 099.8521	VITRAMON	VJ1206 Y 103 K FAT	
C101	CC 10NF-20+50%7X8R4000 CAPACITOR	CC 087.7525	VALVO	2222 63051 64051103	
C102	CC 10NF-20+50%7X8R4000 CAPACITOR	CC 087.7525	VALVO	2222 63051 64051103	
C103	CC 10NF+-10%50V X7R 1206 CERAMIC CHIP CAPACITOR	CC 099.8521	VITRAMON	VJ1206 Y 103 K FAT	
C104	CC 10NF+-10%50V X7R 1206 CERAMIC CHIP CAPACITOR	CC 099.8521	VITRAMON	VJ1206 Y 103 K FAT	
C105 ..108	CC 10NF-20+50%7X8R4000 CAPACITOR	CC 087.7525	VALVO	2222 63051 64051103	
C111	CC 10NF+-10%50V X7R 1206 CERAMIC CHIP CAPACITOR	CC 099.8521	VITRAMON	VJ1206 Y 103 K FAT	

Kennz. Comp.No.	Benennung Designation	Sachnummer Stock No.	Hersteller Manufacturer	Bezeichnung Designation	enthalten in contained in
C112	CC 10NF+-10%50V X7R 1206 CERAMIC CHIP CAPACITOR	CC 099.8521	VITRAMON	VJ1206 Y 103 K FAT	
C113	CC 100PF+-2%6X9NP0 CAPACITOR	CC 087.6541	VALVO	2222 678 10101	
C130	CC 10NF-20+50%7X8R4000 CAPACITOR	CC 087.7525	VALVO	2222 63051 64051103	
C131	CC 10NF-20+50%7X8R4000 CAPACITOR	CC 087.7525	VALVO	2222 63051 64051103	
C140	CC 10NF+-10%50V X7R 1206 CERAMIC CHIP CAPACITOR	CC 099.8521	VITRAMON	VJ1206 Y 103 K FAT	
C142	CC 10NF+-10%50V X7R 1206 CERAMIC CHIP CAPACITOR	CC 099.8521	VITRAMON	VJ1206 Y 103 K FAT	
D1	BC DE2864-35 8KX8 EEPROM EEPROM	682.4381	SEEQ	DE2864-35	
D2	BL PC74HCT123T 2XMULTIVIB DUAL MULTIVIBRATOR	BL 007.6333	VALVO	PC74HCT123T	
D3	BL PC74HCT173T 4XD-FF 3S QUAD D-TYPE FLIPFLOP	BL 007.6933	VALVO	PC74HCT173T	
D4	BL PC74HCT574T 8XD-FF 3S OCTAL D-TYPE FLIPFLOP	BL 007.6727	VALVO	PC74HCT574T	
D5	BL PC74HCT574T 8XD-FF 3S OCTAL D-TYPE FLIPFLOP	BL 007.6727	VALVO	PC74HCT574T	
D6	BL PC74HCT175T 4XD-FF RES QUAD D-TYPE FLIPFLOP	BL 007.6462	VALVO	PC74HCT175T	
D7	BL PC74HCT138T LINE DECOD LINE DECODER	BL 007.5120	VALVO	PC74HCT138T	
D8	BL PC74HCT574T 8XD-FF 3S OCTAL D-TYPE FLIPFLOP	BL 007.6727	VALVO	PC74HCT574T	
D9	BJ TL604IP 2X ANALOGSCH ANALOG SWITCH	337.4554	TEXAS INST	TL604JP (IP)	
L1	LD 2,20UH10%0,400HMO,415A CHOKE	LD 067.2905	DELEVAN	DROSSEL1025-28	
L2	LD 2,20UH10%0,400HMO,415A CHOKE	LD 067.2905	DELEVAN	DROSSEL1025-28	
L3	LD 22,0UH10%3,300HMO,114A CHOKE	LD 067.3024	DELEVAN	DROSSEL1025-52	
L4 ..6	LD 0,82UH10%0,850HMO,420A CHOKE	LD 067.2857	DELEVAN	DROSSEL1025-18	
L7	LD 100 UH10%8,000HMO,084A CHOKE	LD 067.3101	DELEVAN	DROSSEL1025-68	
L8	LD 0,82UH10%0,850HMO,420A CHOKE	LD 067.2857	DELEVAN	DROSSEL1025-18	
L9	LD 0,82UH10%0,850HMO,420A CHOKE	LD 067.2857	DELEVAN	DROSSEL1025-18	
L10	LD 0,82UH10%0,850HMO,420A CHOKE	LD 067.2857	DELEVAN	DROSSEL1025-18	
L12	LD 0,82UH10%0,850HMO,420A CHOKE	LD 067.2857	DELEVAN	DROSSEL1025-18	
L13	LD 100 UH10%8,000HMO,084A CHOKE	LD 067.3101	DELEVAN	DROSSEL1025-68	
L14	LD 0,82UH10%0,850HMO,420A CHOKE	LD 067.2857	DELEVAN	DROSSEL1025-18	
L15	LD 0,82UH10%0,850HMO,420A CHOKE	LD 067.2857	DELEVAN	DROSSEL1025-18	
L49	LD 0,18UH10%0,120HM1,120A CHOKE	LD 067.2770	DELEVAN	DROSSEL1025-02	
L50	LF ROHRK.RD3,6XRD1,2XL3,3 TUBULAR CORE	LF 026.9286			
L52	LD 4,70UH10%1,200HMO,239A CHOKE	LD 067.2940	DELEVAN	DROSSEL1025-36	
L54	LF ROHRK.RD3,6XRD1,2XL3,3 TUBULAR CORE	LF 026.9286			
L55	LD 12,0UH10%2,700HMO,160A CHOKE	LD 067.2992	DELEVAN	DROSSEL1025-46	
L57	LD 100 UH10%8,000HMO,084A CHOKE	LD 067.3101	DELEVAN	DROSSEL1025-68	
L58	LD 10 UH 10% 3R3 144 MA CHOKE	LD 026.4184	DELEVAN	DROSSEL1025-44	
L60	LD 100 UH10%8,000HMO,084A CHOKE	LD 067.3101	DELEVAN	DROSSEL1025-68	
L61	LD 100 UH10%8,000HMO,084A CHOKE	LD 067.3101	DELEVAN	DROSSEL1025-68	
L62	LF ROHRK.RD3,6XRD1,2XL3,3 TUBULAR CORE	LF 026.9286			
L63	LD 1,50UH10%0,220HMO,560A CHOKE	LD 067.2886	DELEVAN	DROSSEL 1025-24	

Für diese Unterlage behalten wir alle Rechte vor

Kennz. Comp.No.	Benennung Designation	Sachnummer Stock No.	Hersteller Manufacturer	Bezeichnung Designation	enthalten in contained in
L64	LF ROHRK.RD3,5X1,2X3 GETR TUBLAR CORE	LF 026.9257			
L65	LF ROHRK.RD3,6XRD1,2XL3,3 TUBULAR CORE	LF 026.9286			
L66	LF ROHRK.RD3,5X1,2X3 GETR TUBLAR CORE	LF 026.9257			
L67	LD 1,50UH10%0,220HMO,560A CHOKE	LD 067.2886	DELEVAN	DROSSEL 1025-24	
L68	LD 6,80UH10%2,000HMO,185A CHOKE	LD 026.4178	DELEVAN	DROSSEL1025-40	
L69	LD 0,82UH10%0,850HMO,420A CHOKE	LD 067.2857	DELEVAN	DROSSEL1025-18	
L70	LD 5,60UH10%1,800HMO,195A CHOKE	LD 067.2957	DELEVAN	DROSSEL1025-38	
L71	LF ROHRK.RD3,6XRD1,2XL3,3 TUBULAR CORE	LF 026.9286			
L72	LD 10 UH 10% 3R3 144 MA CHOKE	LD 026.4184	DELEVAN	DROSSEL1025-44	
L73 ..76	LF ROHRK.RD3,5X1,2X3 GETR TUBLAR CORE	LF 026.9257			
L77	LF ROHRK.RD3,6XRD1,2XL3,3 TUBULAR CORE	LF 026.9286			
L78	LF ROHRK.RD3,6XRD1,2XL3,3 TUBULAR CORE	LF 026.9286			
L79	LF ROHRK.RD3,6XRD1,2XL3,3 TUBULAR CORE	LF 026.9286			
L80	LD 1,50UH10%0,220HMO,560A CHOKE	LD 067.2886	DELEVAN	DROSSEL 1025-24	
L81	LD 100 UH10%8,000HMO,084A CHOKE	LD 067.3101	DELEVAN	DROSSEL1025-68	
L82	LD 10 UH 10% 3R3 144 MA CHOKE	LD 026.4184	DELEVAN	DROSSEL1025-44	
L83	LD 12,0UH10%2,700HMO,160A CHOKE	LD 067.2992	DELEVAN	DROSSEL1025-46	
L84	LD 10 UH 10% 3R3 144 MA CHOKE	LD 026.4184	DELEVAN	DROSSEL1025-44	
L85	LD 0,82UH10%0,850HMO,420A CHOKE	LD 067.2857	DELEVAN	DROSSEL1025-18	
L86	LD 10 UH 10% 3R3 144 MA CHOKE	LD 026.4184	DELEVAN	DROSSEL1025-44	
L88	LF ROHRK.RD3,6XRD1,2XL3,3 TUBULAR CORE	LF 026.9286			
L90	LD 10 UH 10% 3R3 144 MA CHOKE	LD 026.4184	DELEVAN	DROSSEL1025-44	
L100	LD 10 UH 10% 3R3 144 MA CHOKE	LD 026.4184	DELEVAN	DROSSEL1025-44	
L130	LD 10 UH 10% 3R3 144 MA CHOKE	LD 026.4184	DELEVAN	DROSSEL1025-44	
L131	LD 10 UH 10% 3R3 144 MA CHOKE	LD 026.4184	DELEVAN	DROSSEL1025-44	
N1	BO UA79M05H- 5V0A5 VREGL VOLTAGE REGULATOR	092.8684	FAIRCHILD	UA79M05HM	
N2	BO LF412CN 2XFET OPAMP OPERATIONAL AMPLIFIER	356.0521	NSC	LF412CN	
N3	BO LM224D 4XL.P.OPAMP OPERATIONAL AMPLIFIER	007.7852	SIGNETICS	LM224D	
N4	BO LF412CN 2XFET OPAMP OPERATIONAL AMPLIFIER	356.0521	NSC	LF412CN	
N50	BO NE521D 2X COMPAR COMPARATOR	007.7881	SIGNETICS	NE521D	
R3	RS 0,3W 10KOHM+-10%CERMET TRIMMING POTENTIOMETER	RS 006.9145	BECKMAN	67W 10KOHM 10%	
R4	RG 3,32KOHM+-1%TK100 1206 RESISTOR CHIP	RG 007.5789	DALE	CRCW1206-10 3K32 F-T	
R5	RG 3,32KOHM+-1%TK100 1206 RESISTOR CHIP	RG 007.5789	DALE	CRCW1206-10 3K32 F-T	
R6	RG 3,32KOHM+-1%TK100 1206 RESISTOR CHIP	RG 007.5789	DALE	CRCW1206-10 3K32 F-T	
R7	RG 1000 OHM+-1%TK100 1206 CHIP RESISTOR	RG 006.7271	DALE	CRCW1206-10 1K F-T	
R9	RG 4,75KOHM+-1%TK100 1206 RESISTOR CHIP	RG 007.5820	DALE	CRCW1206-10 4K75 F-T	
R10	RG 33,2KOHM+-1%TK100 1206 RESISTOR CHIP	RG 007.5914	DALE	CRCW1206-10 33K2 F-T	
R11	RL 0,35W 1KOHM+-1%TK50 RESISTOR	RL 082.2160	DRALORIC	SMA0207/1K-F-C	

Kennz. Comp.No.	Benennung Designation	Sachnummer Stock No.	Hersteller Manufacturer	Bezeichnung Designation	enthalten in contained in
R13	RG 100KOHM+-1%TK100 1206 CHIP RESISTOR	RG 007.1948	DALE	CRCW1206-10 100K F-T	
R15	RG 2,21KOHM+-1%TK100 1206 RESISTOR CHIP	RG 007.5743	DALE	CRCW1206-10 2K21 F-T	
R16	RL 0,35W 6,81KOHM+-1%TK50 RESISTOR	RL 082.2560	DRALORIC	SMA 0207/6,81K-F-C	
R17	RG 1000 OHM+-1%TK100 1206 CHIP RESISTOR	RG 006.7271	DALE	CRCW1206-10 1K F-T	
R18	RL 0,35W 1KOHM+-1%TK50 RESISTOR	RL 082.2160	DRALORIC	SMAO207/1K-F-C	
R19	RG 2,21KOHM+-1%TK100 1206 RESISTOR CHIP	RG 007.5743	DALE	CRCW1206-10 2K21 F-T	
R20	RL 0,35W 22,1KOHM+-1%TK50 RESISTOR	RL 083.1545	DRALORIC	SMA/207/22,1K-F-C	
R22	RL 0,35W 1KOHM+-1%TK50 RESISTOR	RL 082.2160	DRALORIC	SMAO207/1K-F-C	
R23	RL 0,35W 1KOHM+-1%TK50 RESISTOR	RL 082.2160	DRALORIC	SMAO207/1K-F-C	
R24	RG 68,1KOHM+-1%TK100 1206 CHIP RESISTOR	RG 007.1902	DALE	CRCW1206-10 68K1 F-T	
R25	RG 12,1KOHM+-1%TK100 1206 CHIP RESISTOR	RG 007.0841	DALE	CRCW1206-10 12K1 F-T	
R26	RG 182KOHM+-1%TK100 1206 RESISTOR CHIP	RG 007.5989	DALE	CRCW1206-10 182K F-T	
R27	RG 10 KOHM+-1%TK100 1206 CHIP RESISTOR	RG 007.0793	DALE	CRCW1206-10 10K F-T	
R29	RG 100KOHM+-1%TK100 1206 CHIP RESISTOR	RG 007.1948	DALE	CRCW1206-10 100K F-T	
R30	RG 2,0 KOHM+-1%TK100 1206 RESISTOR CHIP	RG 007.5737	DALE	CRCW1206-10 2K F-T	
R32	RK HEISSL 1KOHM,5% 0.7W THERMISTOR	843.4905	SIEMENS	Q63068Z-M2102-J	
R33	RG 909 OHM+-1%TK100 1206 CHIP RESISTOR	RG 006.7265	DALE	CRCW1206-10 909R F-T	
R34	RG 12,1 OHM+-1%TK100 1206 CHIP RESISTOR	RG 006.8661	DALE	CRCW1206-10 12R1 F-T	
R35	RS 0,3W 10 OHM+-10%CERMET TRIMMING POTENTIOMETER	RS 006.9100	BECKMAN	67W 10OHM 10%	
R36	RL 0,35W 22,1KOHM+-1%TK50 RESISTOR	RL 083.1545	DRALORIC	SMA/207/22,1K-F-C	
R37	RG 221 OHM+-1%TK100 1206 RESISTOR CHIP	RG 007.5614	DALE	CRCW1206-10 221R F-T	
R38	RG 1000 OHM+-1%TK100 1206 CHIP RESISTOR	RG 006.7271	DALE	CRCW1206-10 1K F-T	
R39	RG 56,2KOHM+-1%TK100 1206 CHIP RESISTOR	RG 007.1883	DALE	CRCW1206-10 56K2 F-T	
R40	RS 0,3W500KOHM+-10%CERMET TRIMMING POTENTIOMETER	RS 006.9180	BECKMAN	67W 500KOHM 10%	
R42	RG 4,75KOHM+-1%TK100 1206 RESISTOR CHIP	RG 007.5820	DALE	CRCW1206-10 4K75 F-T	
R43	RG 1,00MOHM+-1%TK100 1206 CHIP RESISTOR	RG 815.7532	DALE	CRCW1206-10 1M F-T	
R44	RG 68,1KOHM+-1%TK100 1206 CHIP RESISTOR	RG 007.1902	DALE	CRCW1206-10 68K1 F-T	
R45	RG 68,1KOHM+-1%TK100 1206 CHIP RESISTOR	RG 007.1902	DALE	CRCW1206-10 68K1 F-T	
R46	RG 1,00MOHM+-1%TK100 1206 CHIP RESISTOR	RG 815.7532	DALE	CRCW1206-10 1M F-T	
R47	RG 4,75KOHM+-1%TK100 1206 RESISTOR CHIP	RG 007.5820	DALE	CRCW1206-10 4K75 F-T	
R48	RG 1,00MOHM+-1%TK100 1206 CHIP RESISTOR	RG 815.7532	DALE	CRCW1206-10 1M F-T	
R49	RG 56,2 OHM+-1%TK100 1206 CHIP RESISTOR	RG 006.8826	DALE	CRCW1206-10 56R2 F-T	
R50	RG 100 OHM+-1%TK100 1206 CHIP RESISTOR	RG 006.8884	DALE	CRCW1206-10 100R F-T	
R51	RG 10 KOHM+-1%TK100 1206 CHIP RESISTOR	RG 007.0793	DALE	CRCW1206-10 10K F-T	
R52	RG 47,5 OHM+-1%TK100 1206 RESISTOR CHIP	RG 007.5566	DALE	CRCW1206-10 47R5 F-T	
R53	RG 4,75KOHM+-1%TK100 1206 RESISTOR CHIP	RG 007.5820	DALE	CRCW1206-10 4K75 F-T	
R54	RL 0,35W 182 OHM+-1%TK50 RESISTOR	RL 083.0010	DRALORIC	SMAO207/182OHM-F-D	
R55	RG 22,1KOHM+-1%TK100 1206 RESISTOR CHIP	RG 007.5872	DALE	CRCW1206-10 22K1 F-T	
R56	RG 5,62KOHM+-1%TK100 1206 CHIP RESISTOR	RG 007.0735	DALE	CRCW1206-10 5K62 F-T	

Für diese Unterlage behalten wir alle Rechte vor

Kennz. Comp.No.	Benennung Designation	Sachnummer Stock No.	Hersteller Manufacturer	Bezeichnung Designation	enthalten in contained in
R57	RG 1000 OHM+-1%TK100 1206 CHIP RESISTOR	RG 006.7271	DALE	CRCW1206-10 1K F-T	
R58	RG 47,5KOHM+-1%TK100 1206 RESISTOR CHIP	RG 007.5950	DALE	CRCW1206-10 47K5 F-T	
R59	RG 1000 OHM+-1%TK100 1206 CHIP RESISTOR	RG 006.7271	DALE	CRCW1206-10 1K F-T	
R60	RL 0,35W 10.0KOHM+-1%TK50 RESISTOR	RL 083.1297	DRALORIC	SMA0207/10K-F-D	
R61	RL 0,35W 2,21KOHM+-1%TK50 RESISTOR	RL 082.2477	DRALORIC	SMA 0207/2,21K-F-C	
R62	RL 0,35W14,00 OHM+-1%TK50 RESISTOR	RL 082.8998	DRALORIC	SMA0207/140HM-F-D	
R63	RG 3,32KOHM+-1%TK100 1206 RESISTOR CHIP	RG 007.5789	DALE	CRCW1206-10 3K32 F-T	
R64	RL 0,35W14,00 OHM+-1%TK50 RESISTOR	RL 082.8998	DRALORIC	SMA0207/140HM-F-D	
R65	RG 68,1 OHM+-1%TK100 1206 CHIP RESISTOR	RG 006.8849	DALE	CRCW1206-10 68R1 F-T	
R66-	RS 0,3W 20 OHM+-10%CERMET DEPOS-CARBON POTENTIOMET	RS 086.7867	BOURNS	3292X-1-20 OHM+-10%	
R70	RL 0,35W14,00 OHM+-1%TK50 RESISTOR	RL 082.8998	DRALORIC	SMA0207/140HM-F-D	
R72	RL 0,35W14,00 OHM+-1%TK50 RESISTOR	RL 082.8998	DRALORIC	SMA0207/140HM-F-D	
R73	RG 68,1 OHM+-1%TK100 1206 CHIP RESISTOR	RG 006.8849	DALE	CRCW1206-10 68R1 F-T	
R74	RS 0,3W 20 OHM+-10%CERMET DEPOS-CARBON POTENTIOMET	RS 086.7867	BOURNS	3292X-1-20 OHM+-10%	
R75	RG 3,32KOHM+-1%TK100 1206 RESISTOR CHIP	RG 007.5789	DALE	CRCW1206-10 3K32 F-T	
R76	RL 0,35W 2,21KOHM+-1%TK50 RESISTOR	RL 082.2477	DRALORIC	SMA 0207/2,21K-F-C	
R77	RG 56,2 OHM+-1%TK100 1206 CHIP RESISTOR	RG 006.8826	DALE	CRCW1206-10 56R2 F-T	
R78	RG 4,75KOHM+-1%TK100 1206 RESISTOR CHIP	RG 007.5820	DALE	CRCW1206-10 4K75 F-T	
R79	RG 8,25KOHM+-1%TK100 1206 CHIP RESISTOR	RG 007.0770	DALE	CRCW1206-10 8K25 F-T	
R80	RL 0,35W 68,1 OHM+-1%TK50 RESISTOR	RL 082.9636	DRALORIC	SMA0207/68,1OHM-F-D	
R82	RG 12,1KOHM+-1%TK100 1206 CHIP RESISTOR	RG 007.0841	DALE	CRCW1206-10 12K1 F-T	
R83	RG 56,2 OHM+-1%TK100 1206 CHIP RESISTOR	RG 006.8826	DALE	CRCW1206-10 56R2 F-T	
R84	RG 332 OHM+-1%TK100 1206 RESISTOR CHIP	RG 007.5650	DALE	CRCW1206-10 332R F-T	
R85	RL 0,35W 3,32KOHM+-1%TK50 RESISTOR	RL 083.0990	DRALORIC	SMA0207/3,32K-F-D	
R86	RS 0,3W 50 OHM+-10%CERMET CERMET POTENTIOMETER	RS 086.7873	BOURNS	3292X-1-50 OHM+-10%	
R87	RG 150 OHM+-1%TK100 1206 RESISTOR CHIP	RG 007.5589	DALE	CRCW1206-10 150R F-T	
R88	RG 4,75KOHM+-1%TK100 1206 RESISTOR CHIP	RG 007.5820	DALE	CRCW1206-10 4K75 F-T	
R89	RL 0,35W 121 OHM+-1%TK50 RESISTOR	RL 082.9859	DRALORIC	SMA0207/121OHM-F-D	
R90	RG 47,5 OHM+-1%TK100 1206 RESISTOR CHIP	RG 007.5566	DALE	CRCW1206-10 47R5 F-T	
R92	RG 56,2 OHM+-1%TK100 1206 CHIP RESISTOR	RG 006.8826	DALE	CRCW1206-10 56R2 F-T	
R93	RG 4,75KOHM+-1%TK100 1206 RESISTOR CHIP	RG 007.5820	DALE	CRCW1206-10 4K75 F-T	
R94	RG 8,25KOHM+-1%TK100 1206 CHIP RESISTOR	RG 007.0770	DALE	CRCW1206-10 8K25 F-T	
R95	RL 0,35W 68,1 OHM+-1%TK50 RESISTOR	RL 082.9636	DRALORIC	SMA0207/68,1OHM-F-D	
R96	RG 68,1 OHM+-1%TK100 1206 CHIP RESISTOR	RG 006.8849	DALE	CRCW1206-10 68R1 F-T	
R98	RG 12,1KOHM+-1%TK100 1206 CHIP RESISTOR	RG 007.0841	DALE	CRCW1206-10 12K1 F-T	
R99	RG 4,75KOHM+-1%TK100 1206 RESISTOR CHIP	RG 007.5820	DALE	CRCW1206-10 4K75 F-T	
R100	RL 0,35W 121 OHM+-1%TK50 RESISTOR	RL 082.9859	DRALORIC	SMA0207/121OHM-F-D	
R102	RL 0,35W 562 KOHM+-1%TK50 RESISTOR	RL 083.2664	DRALORIC	SMA0207/562K-F-C	
R103	RG 47,5 OHM+-1%TK100 1206 RESISTOR CHIP	RG 007.5566	DALE	CRCW1206-10 47R5 F-T	

Kennz. Comp.No.	Benennung Designation	Sachnummer Stock No.	Hersteller Manufacturer	Bezeichnung Designation	enthalten in contained in
R104	RG 3,32KOHM+-1%TK100 1206 RESISTOR CHIP	RG 007.5789	DALE	CRCW1206-10 3K32 F-T	
R105	RG 18,2KOHM+-1%TK100 1206 RESISTOR CHIP	RG 007.5850	DALE	CRCW1206-10 18K2 F-T	
R106	RL 0,35W 681 OHM+-1%TK50 RESISTOR	RL 083.0490	DRALORIC	SMA0207/681OHM-F-D	
R107	RG 150 OHM+-1%TK100 1206 RESISTOR CHIP	RG 007.5589	DALE	CRCW1206-10 150R F-T	
R108	RL 0,35W 750 OHM+-1%TK50 RESISTOR	RL 082.2360	DRALORIC	SMA0207/750OHM-F-C	
R109	RL 0,35W 332 OHM+-1%TK50 RESISTOR	RL 083.0255	DRALORIC	SMA0207/332OHM-F-D	
R110	RG 43,2 OHM+-1%TK100 1206 RESISTOR CHIP	RG 007.5550	DALE	CRCW1206-10 43R2 F-T	
R112	RG 56,2 OHM+-1%TK100 1206 CHIP RESISTOR	RG 006.8826	DALE	CRCW1206-10 56R2 F-T	
R112	RG 56,2 OHM+-1%TK100 1206 CHIP RESISTOR	RG 006.8826	DALE	CRCW1206-10 56R2 F-T	F
R113	RL 0,35W 681 OHM+-1%TK50 RESISTOR	RL 083.0490	DRALORIC	SMA0207/681OHM-F-D	
R114	RG 56,2 OHM+-1%TK100 1206 CHIP RESISTOR	RG 006.8826	DALE	CRCW1206-10 56R2 F-T	
R115	RL 0,35W 274 OHM+-1%TK50 RESISTOR	RL 083.0178	DRALORIC	SMA0207/274OHM-F-D	
R116	RG 10 KOHM+-1%TK100 1206 CHIP RESISTOR	RG 007.0793	DALE	CRCW1206-10 10K F-T	
R117	RG 3,92KOHM+-1%TK100 1206 RESISTOR CHIP	RG 007.5808	DALE	CRCW1206-10 3K92 F-T	
R118	RL 0,35W 162 OHM+-1%TK50 RESISTOR	RL 082.9971	DRALORIC	SMA0207/162OHM-F-D	
R119	RG 10 KOHM+-1%TK100 1206 CHIP RESISTOR	RG 007.0793	DALE	CRCW1206-10 10K F-T	
R120	RG 1000 OHM+-1%TK100 1206 CHIP RESISTOR	RG 006.7271	DALE	CRCW1206-10 1K F-T	
R122	RG 22,1KOHM+-1%TK100 1206 RESISTOR CHIP	RG 007.5872	DALE	CRCW1206-10 22K1 F-T	
R123	RG 100 OHM+-1%TK100 1206 CHIP RESISTOR	RG 006.8884	DALE	CRCW1206-10 100R F-T	
R124	RG 1000 OHM+-1%TK100 1206 CHIP RESISTOR	RG 006.7271	DALE	CRCW1206-10 1K F-T	
R125	RL 0,35W 10,0KOHM+-1%TK50 RESISTOR	RL 083.1297	DRALORIC	SMA0207/10K-F-D	
R126	RG 47,5 OHM+-1%TK100 1206 RESISTOR CHIP	RG 007.5566	DALE	CRCW1206-10 47R5 F-T	
R127	RL 0,35W 301 OHM+-1%TK50 RESISTOR	RL 083.0210	DRALORIC	SMA0207/301OHM-F-D	
R128	RG 4,75KOHM+-1%TK100 1206 RESISTOR CHIP	RG 007.5820	DALE	CRCW1206-10 4K75 F-T	
R129	RG 4,75KOHM+-1%TK100 1206 RESISTOR CHIP	RG 007.5820	DALE	CRCW1206-10 4K75 F-T	
R130	RG 274 OHM+-1%TK100 1206 RESISTOR CHIP	RG 007.5637	DALE	CRCW1206-10 274R F-T	
R131	RG 1000 OHM+-1%TK100 1206 CHIP RESISTOR	RG 006.7271	DALE	CRCW1206-10 1K F-T	
R132	RG 5,62KOHM+-1%TK100 1206 CHIP RESISTOR	RG 007.0735	DALE	CRCW1206-10 5K62 F-T	
R133	RL 0,35W 1KOHM+-1%TK50 RESISTOR	RL 082.2160	DRALORIC	SMA0207/1K-F-C	
R137	RL 0,35W 4,75KOHM+-1%TK50 RESISTOR	RL 083.1097	DRALORIC	SMA0207/4,75K-F-D	
R140	RL 0,35W 562 KOHM+-1%TK50 RESISTOR	RL 083.2664	DRALORIC	SMA0207/562K-F-C	
R142	RL 0,35W 562 KOHM+-1%TK50 RESISTOR	RL 083.2664	DRALORIC	SMA0207/562K-F-C	
R143	RG 4,75KOHM+-1%TK100 1206 RESISTOR CHIP	RG 007.5820	DALE	CRCW1206-10 4K75 F-T	
R144	RS 0,3W 10KOHM+-10%CERMET DEPOS-CARBON POTENTIOMET	RS 086.7944	BOURNS	3292X-1- 10KOHM+-10%	
R145	RG 10,0 OHM+-1%TK100 1206 CHIP -RESISTOR	RG 006.8649	DALE	CRCW1206-10 10R F-T	
R146	RG 4,75KOHM+-1%TK100 1206 RESISTOR CHIP	RG 007.5820	DALE	CRCW1206-10 4K75 F-T	
R147	RS 0,3W 10KOHM+-10%CERMET DEPOS-CARBON POTENTIOMET	RS 086.7944	BOURNS	3292X-1- 10KOHM+-10%	
T50	LU UEBERTRAGER TRANSFORMER	808.0113			

Für diese Unterlage behalten wir uns Rechte vor

Kennz. Comp.No.	Benennung Designation	Sachnummer Stock No.	Hersteller Manufacturer	Bezeichnung Designation	enthalten in contained in
U1	BJ ADC910GT 10B.AD-CONV A/D-CONVERTER	840.6259	PMI	ADC910GT	
U2	BJ AD7524AQ 8B.DA-CONV D/A-CONVERTER	BJ 568.7663	ANALOG DEV	AD7524AQ	
V1	AK BC560B P 45V 100MA TRANSISTOR	AK 007.2044	SIEMENS	BC560B GURT,POL.CBE	
V2	BJ LM335H TEMP.SENSOR PRECION TEMP.SENSOR	395.2867	NSC	LM335H	
V3	AK 2N2914 NPN 45V DUAL DUAL-TRANSISTOR	010.5711	SGS	2N2914	
V4	AM J111A N-D 35V JFET FET	AM 007.2038	SILICONIX	J111A GEGURTET AMMOP	
V5	BJ LM335H TEMP.SENSOR PRECION TEMP.SENSOR	395.2867	NSC	LM335H	
V50	AK NE85632 N 12V 100MA TRANSISTOR	354.6839	NEC	NE85632	
V52	AK BC560B P 45V 100MA TRANSISTOR	AK 007.2044	SIEMENS	BC560B GURT,POL.CBE	
V53	AE BA483 BER.SCH.DI.UHF DIODE	AE 568.2290	VALVO	BA483	
V54	AK BFX48 P 30V 100MA TRANSISTOR	AK 010.3202	SGS	BFX48	
V55	AE 5082-2835 SCHOTTKY DIODE	AE 263.8430	HEWLETT-P.	5082-2835	
V56	AE 5082-2835 SCHOTTKY DIODE	AE 263.8430	HEWLETT-P.	5082-2835	
V57 ..60	AE BA483 BER.SCH.DI.UHF DIODE	AE 568.2290	VALVO	BA483	
V62	AK NE85632 N 12V 100MA TRANSISTOR	354.6839	NEC	NE85632	
V63	AE BA483 BER.SCH.DI.UHF DIODE	AE 568.2290	VALVO	BA483	
V64	AK BFX48 P 30V 100MA TRANSISTOR	AK 010.3202	SGS	BFX48	
V65	AK NE85632 N 12V 100MA TRANSISTOR	354.6839	NEC	NE85632	
V66	AK NE85632 N 12V 100MA TRANSISTOR	354.6839	NEC	NE85632	
V67 ..71	AE 5082-3081 100V PIN PIN DIODE	803.0780	HEWLETT-P.	5082-3081	
V73	AK BFX48 P 30V 100MA TRANSISTOR	AK 010.3202	SGS	BFX48	
V74	AK NE85632 N 12V 100MA TRANSISTOR	354.6839	NEC	NE85632	
V75	AK BF374 N 25V 100MA TRANSISTOR	377.3859	MOTOROLA	BF374	
V76	AK BFX48 P 30V 100MA TRANSISTOR	AK 010.3202	SGS	BFX48	
V77	AK NE85632 N 12V 100MA TRANSISTOR	354.6839	NEC	NE85632	
V78	AK BFX48 P 30V 100MA TRANSISTOR	AK 010.3202	SGS	BFX48	
V79	AK NE85632 N 12V 100MA TRANSISTOR	354.6839	NEC	NE85632	
V80	AE BZX79/C3V9 0,5W ZDI ZENER DIODE	AE 086.8234	VALVO	BZX55/C3V9 BZX79...	
V82	AM BF245B N-D 30V JFET FET	AM 010.8627	VALVO	BF245B	
V83	AK BF374 N 25V 100MA TRANSISTOR	377.3859	MOTOROLA	BF374	
V84	AK BF374 N 25V 100MA TRANSISTOR	377.3859	MOTOROLA	BF374	
V85	AE BA483 BER.SCH.DI.UHF DIODE	AE 568.2290	VALVO	BA483	
V86	AE BA483 BER.SCH.DI.UHF DIODE	AE 568.2290	VALVO	BA483	
V87	AE BA483 BER.SCH.DI.UHF DIODE	AE 568.2290	VALVO	BA483	
V88	AK BFX48 P 30V 100MA TRANSISTOR	AK 010.3202	SGS	BFX48	
V90	AE 5082-2835 SCHOTTKY DIODE	AE 263.8430	HEWLETT-P.	5082-2835	
V92	AE 5082-2835 SCHOTTKY DIODE	AE 263.8430	HEWLETT-P.	5082-2835	
V93	AE BZX79/C9V1 0,5W ZDI ZENER DIODE	AE 012.2503	AEG	BZX55/C9V1	

Kennz. Comp.No.	Benennung Designation	Sachnummer Stock No.	Hersteller Manufacturer	Bezeichnung Designation	enthalten in contained in
X1	FJ EINBAUWINKELST. SMC ANGLE CONNECTOR	FJ 249.9684	RADIALL	R 112 669	
X3	FJ EINBAUWINKELST. SMC ANGLE CONNECTOR	FJ 249.9684	RADIALL	R 112 669	
X8	FJ EINBAUWINKELST. SMC ANGLE CONNECTOR	FJ 249.9684	RADIALL	R 112 669	
X12	FP INDIREKT.STECKERL.36P. PIN CONNECTOR 3-POLIG/3 PINS	FP 242.3600	BINDER	742-5-11-0178-00-36	
X14	FP BUCHSENLEISTE 13POL. SOCKET CONNECTOR	FP 510.1391	BERG	76323-213	
X15	FP IND.BUCHSENLEISTE 16P. SOCKET CONNECTOR	FP 230.2249	BERG	76325-208	
X16	FP INDIREKT.STECKERL.36P. PIN CONNECTOR 1-POLIG/1 PIN	FP 242.3600	BINDER	742-5-11-0178-00-36	
X17	FP INDIREKT.STECKERL.36P. PIN CONNECTOR 1-POLIG / 1 PIN	FP 242.3600	BINDER	742-5-11-0178-00-36	
X21	FP IND.STECKERLEISTE 64 P MALE MULTIPOINT CONNECTOR	FP 273.0490	PANDUIT	100-964-033/999	
X48	FP INDIREKT.STECKERL.36P. PIN CONNECTOR 4-POLIG / 4 PINS	FP 242.3600	BINDER	742-5-11-0178-00-36	
X50	FP INDIREKT.STECKERL.36P. PIN CONNECTOR 4-POLIG/4 PINS	FP 242.3600	BINDER	742-5-11-0178-00-36	
X52	FP INDIREKT.STECKERL.36P. PIN CONNECTOR 4-POLIG/4 PINS	FP 242.3600	BINDER	742-5-11-0178-00-36	
X54	FP INDIREKT.STECKERL.36P. PIN CONNECTOR 4-POLIG/4 PINS	FP 242.3600	BINDER	742-5-11-0178-00-36	
X60	FP INDIREKT.STECKERL.36P. PIN CONNECTOR 1-POLIG/1 PIN	FP 242.3600	BINDER	742-5-11-0178-00-36	
					- ENDE -

Für diese Unterlage behalten wir
alle Rechte vor

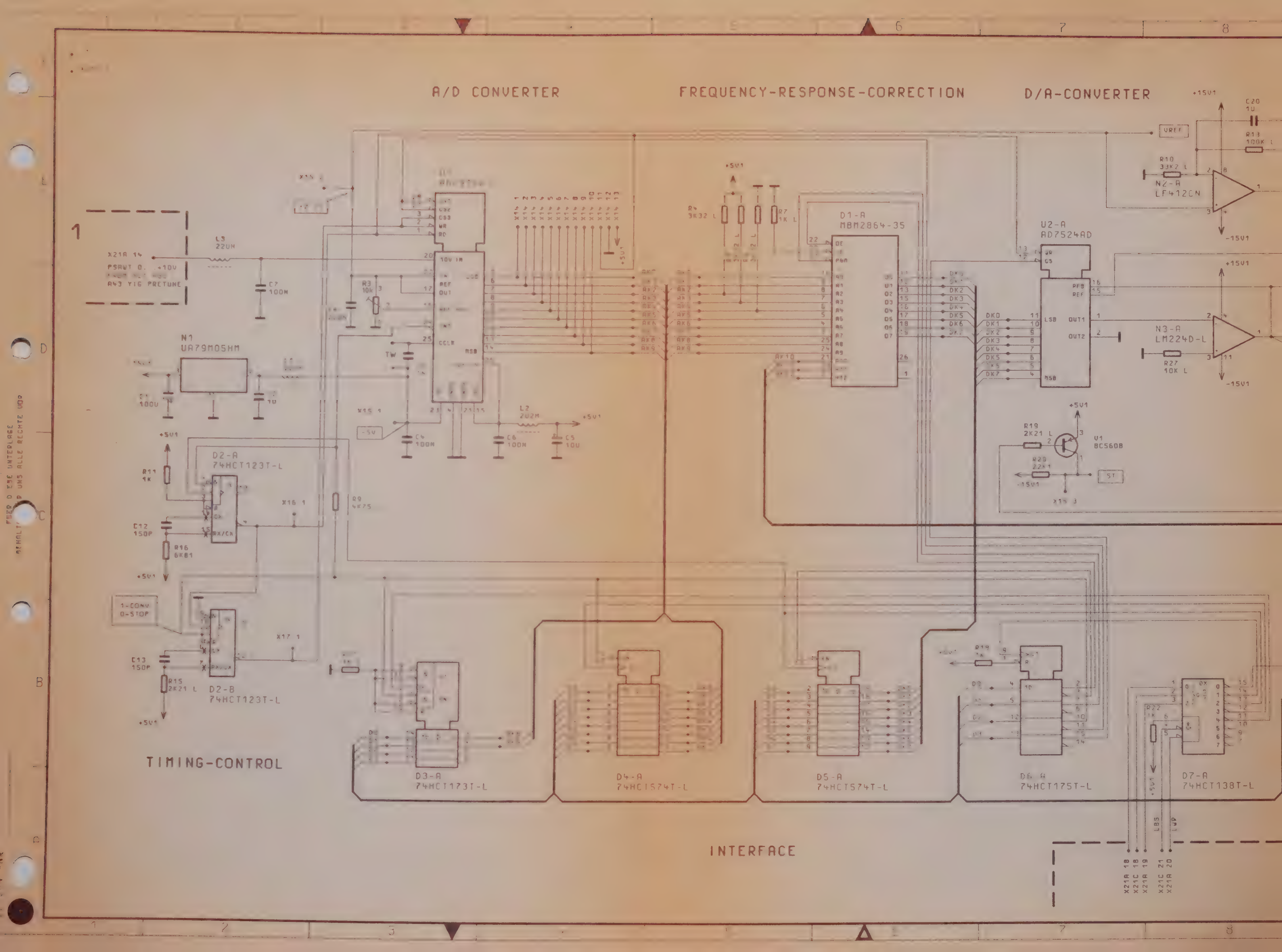
A/D CONVERTER
FREQUENCY-RESPONSE-CORRECTION
D/A-CONVERTER
TIMING-CONTROL
INTERFACE
D1-A
MBM2864-35
U2-A
AD7524AD
N1
UA79M05HM
D2-A
74HCT123T-L
D2-B
74HCT123T-L
D3-A
74HCT173T-L
D4-A
74HCT574T-L
D5-A
74HCT574T-L
D6-A
74HCT175T-L
D7-A
74HCT138T-L
N2-A
LF412CN
N3-A
LM224D-L
V1
BC560B
X21A 14
PSAWT 0...+10V
A43 YIG PRETUNE
1-CONV
0-STOP
X21A 18
X21C 18
X21A 19
X21C 21
X21A 20

2

DB/V-CONVERTER

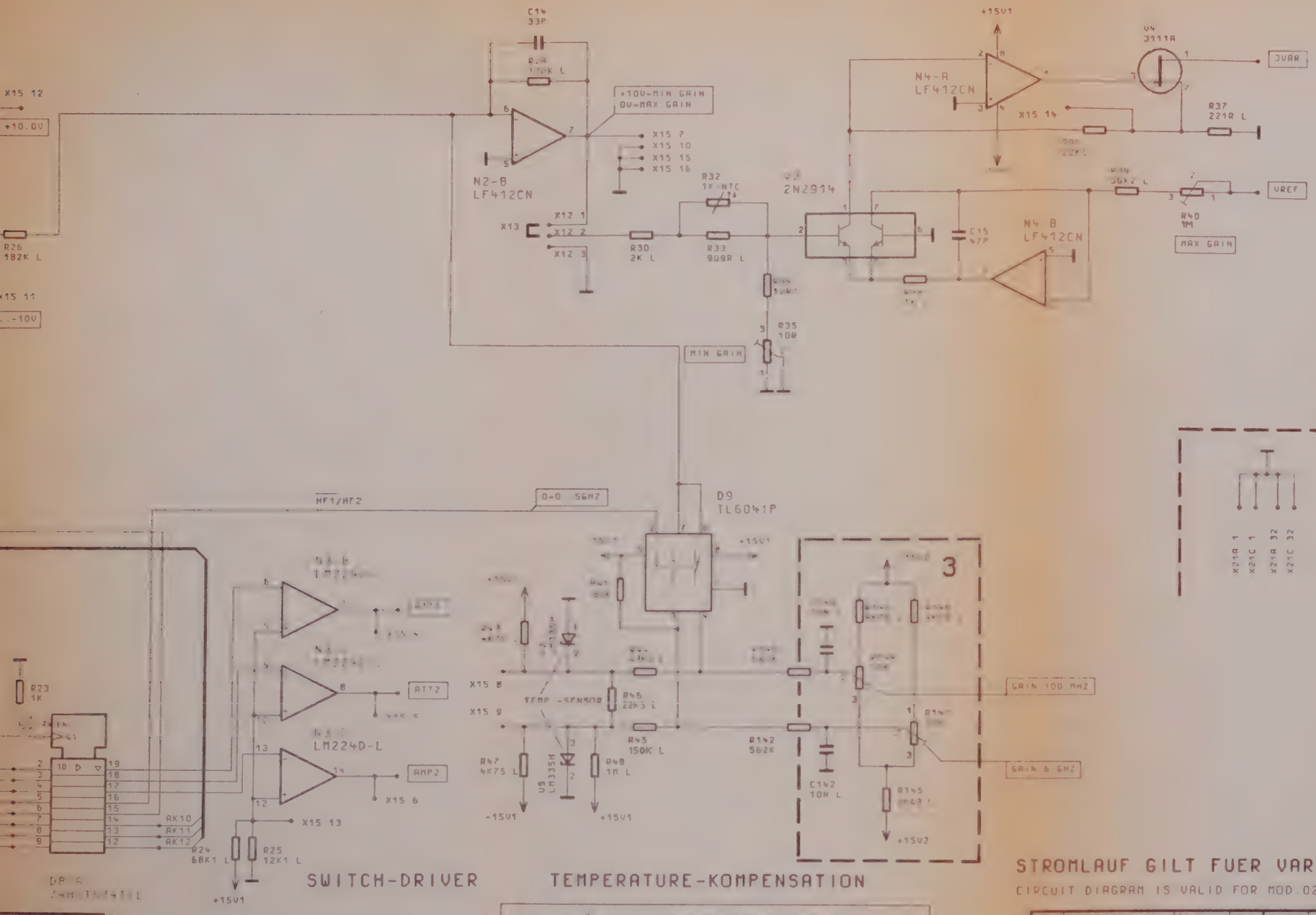

SWITCH-DRIVER

TEMPERATURE-KOMPENSATION

STROMLAUF GILT FUER VAR.02

CIRCUIT DIAGRAM IS VALID FOR MOD.02

ACHTUNG: EGB!

ELEKTROSTATISCH GEFAEHRDETE BAUELEMENTE ERFORDERN EINE BESONDERE HANDHABUNG.

ATTENTION: ESD!

ELEC[illegible] DEVI[illegible] HAN[illegible]

E	37086 (8)	05.89	Gn	BEARB.		GN	BENENNUNG
F	37086 (17)	09.89	Gn	GEPR.		GN	PREAMPLIFIER 3RD IF
	37086 (17)	12.89	Gn	NORM			PREAMPLIFIER 3RD IF
				P.DIT	12. 1 89	*	
							ZEICHN.-NR.
				ROHDE&SCHWARZ			848.8009.01S
				ZU GERRET	FSB		REG. V 848 0020
Nr.	AENDERUNGS-MITTEILUNG	DATUM	NAME				ERSTE Z

BLATT-NR 1 v 2 BL

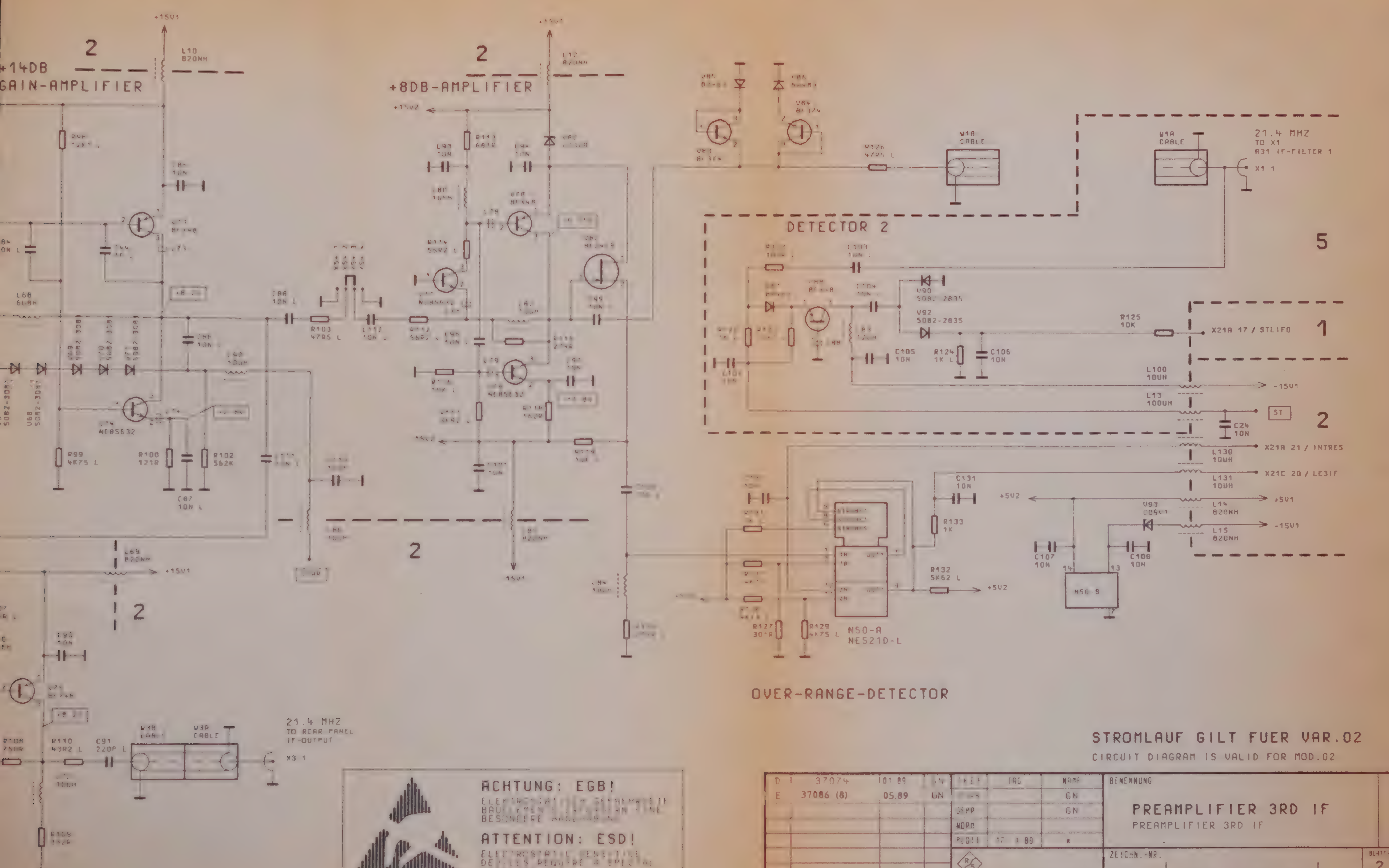

STROMLAUF GILT FUER VAR.02

CIRCUIT DIAGRAM IS VALID FOR MOD.02

ACHTUNG: EGB!

ELEKTROSTATISCH GEFAEHRDETE BAUELEMENTE ERFORDERN EINE BESONDERE HANDHABUNG

ATTENTION: ESD!

ELECTROSTATIC SENSITIVE DEVICES REQUIRE A SPECIAL HANDLING

AEND IND	AENDERUNGS-MITTEILUNG	DATUM	NAME
D	37074	01.89	GN
E	37086 (8)	05.89	GN

	TAG	NAME
GEPR		GN
NORM		
PLOTT	17.1.89	*

BENENNUNG: PREAMPLIFIER 3RD IF
PREAMPLIFIER 3RD IF

ROHDE&SCHWARZ

ZU GERAET: FSB

ZEICHN.-NR.: 848.8009.01S

BLATT-NR: 2 V. 2 BL

REG I V. 848 0020

ERSTE Z.

FUER DIESE UNTERLAGE
BEHALTEN WIR UNS ALLE RECHTE VOR

11DB AMPLIFIER

STEP-ATTENUATOR

0/-5DB

0/-5DB

0/+10DB
STEP-GAIN-AMPLIFIER

-4.
VAR

DETECTOR 1

BUFFER-AMPLIFIE

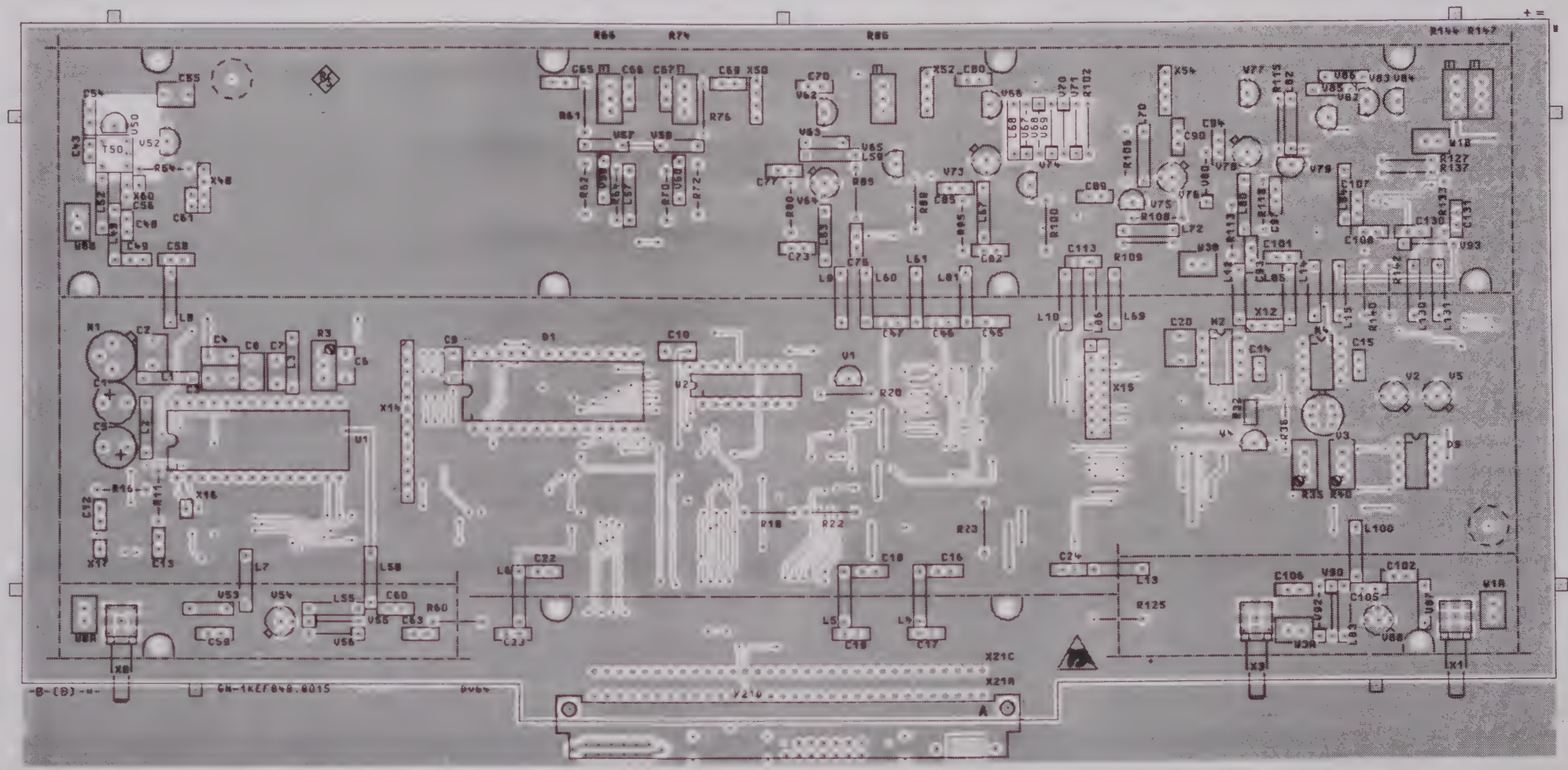

Ansicht und Leitungsführung Bauteilseite
View of tracks on component side

VARIANTENERKLÄRUNG / VERSION
VAR 02 – GRUNDAUSFÜHRUNG / BASIC MODEL

C 37074 (29) 12.88 GN	Maße ohne Toleranzangabe	Maßstab 1 : 1	
		Halbzeug, Werkstoff	
	1KEF Tag Name	Benennung	
	Bearb 12.88 GN	PREAMPLIFIER 3RD IF	Z
	Gepr		
	Norm		
	ROHDE & SCHWARZ	Zeichn.-Nr 848.8009.01 EE	Blatt-Nr 3
And. Zust. / Änderungs-Mitteilung / Tag / Name	zu Gerät FSB	reg. i. V. 848.0020V / erste Z	

ACHTUNG EGB!
Elektrostatisch gefährdete Bauelemente erfordern eine besondere Handhabung
ATTENTION ESD!
Electrostatic sensitive devices require a special handling

(hierzu HVC 250)

Fü... se Unterlage behalten, ...s alle Rechte vor

Darstellung Loetseite

Bearbeitet nach HVN 000

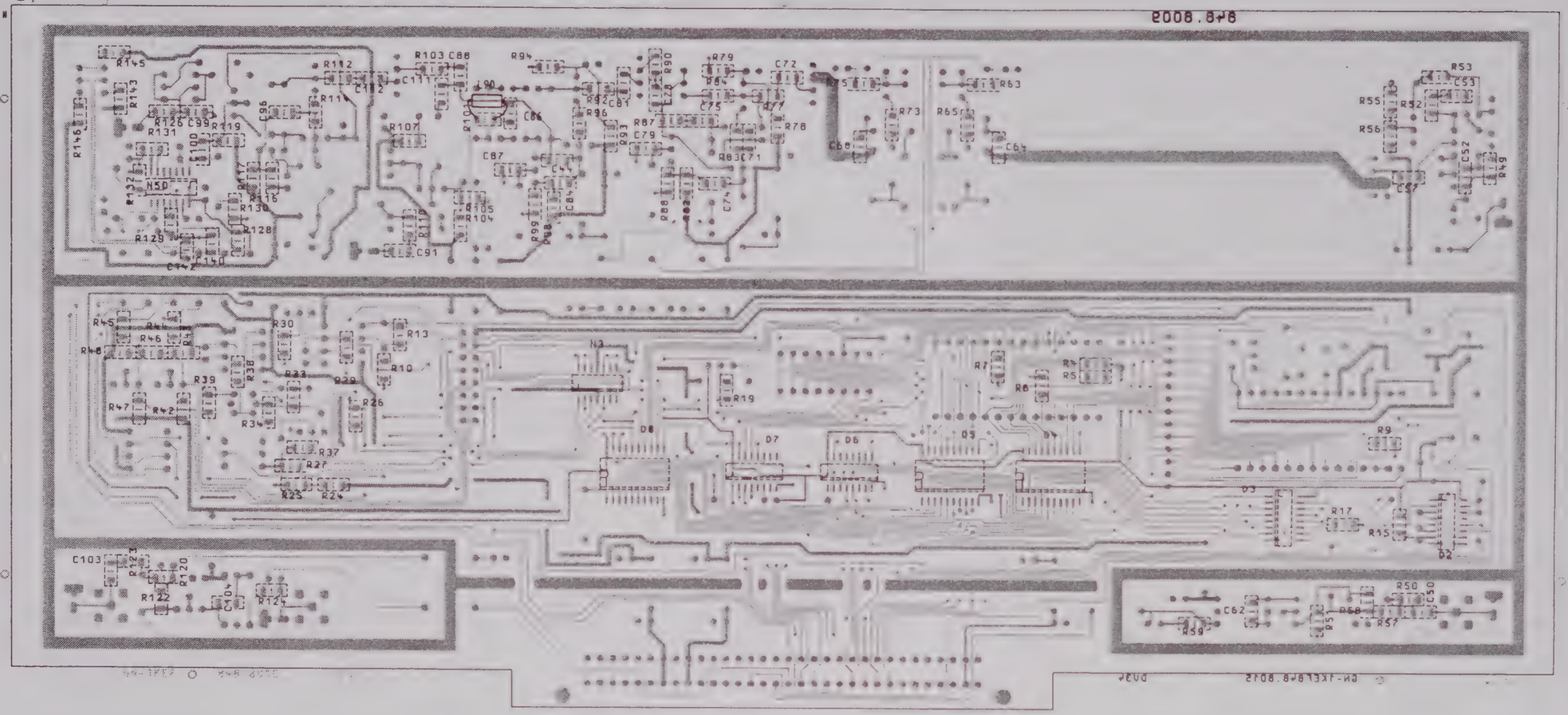

FUER DIESE ZEICHNUNG BEHALTEN WIR UNS ALLE RECHTE VOR
DIESE ZEICHNUNG IST RECHNERAUSDUCK ANDERUNGEN KOENNEN NUR DURCH ABGABE DES DATENSATZES ERFOLGEN

Variantenerklaerung / VERSION
VAR02 - Grundausfuehrung / BASIC MODEL

ACHTUNG: EGB!
ELEKTROSTATISCH GEFAEHRDETE BAUELEMENTE ERFORDERN EINE BESONDERE HANDHABUNG.
EINBAU UND BETRIEB NACH HVC 250

				MASSE OHNE TOLERANZANGABE -0.2 MM			MASSSTAB 1 : 1
							WERKSTOFF
C	37074 (29)	01.12.88	GN	1KEF	TAG	NAME	BENENNUNG
D	37 074	01.89	GN	BEARB.		HW	PREAMPLIFIER 3RD IF
				GEPR.		FR	PREAMPLIFIER 3RD IF
				NORM			Z
				PLOTT	9.12.88	*	
AEND. IND.	AENDERUNGS-MITTEILUNG	DATUM	NAME	ROHDE&SCHWARZ			ZEICHN.-NR. 848.8009.01 EE
				ZU GERAET FSB			BLATT NR 2
							REG.I.V. 848.0020 ERSTE Z.

ROHDE&SCHWARZ

SERVICE DOCUMENTATION

YIG Synchronization

849.2010.02

Contents

		Page
6	**Service Instructions "YIG Synchronization"**	6.1
6.1	**Function Description**	6.1
6.1.1	General	6.1
6.1.2	Function of the Module	6.1
6.1.3	Microwave Section	6.3
6.1.3.1	LO Path	6.3
6.1.3.2	Synchronization Path	6.3
6.1.3.3	Comb Generator	6.4
6.1.4	Main Board	6.4
6.1.4.1	Preamplifier	6.4
6.1.4.2	IF Amplifier	6.4
6.1.4.3	Phase Detector	6.4
6.1.4.4	Level Control	6.5
6.1.4.5	Operating Point Control	6.5
6.2	**Testing and Adjustment**	6.5
6.2.1	LO Path	6.5
6.2.2	Synchronization Path	6.5
6.2.3	Comb Generator and Preamplifier	6.6
6.2.4	IF Path	6.6
6.2.4.1	Conversion Loss of Mixer M1	6.6
6.2.4.2	Gain of IF Amplifiers	6.6
6.2.5	Limiting Amplifier	6.6
6.2.6	Frequency Phase Detector	6.6
6.2.7	Level Control	6.7
6.2.8	Synchronization	6.7
6.2.9	Switchover of Gain (SYGAIN)	6.7
6.2.10	Spectral Purity of Synchronized YIG Oscillator Signal	6.7
6.2.11	Phase Noise and Spurious	6.8
6.3	**Troubleshooting**	6.9

Parts lists
Circuit diagrams
Component location plans

6 Service Instructions "YIG Synchronization"

(See circuit diagram 849.2010 S)

6.1 Function Description

The module consists of two parts:

- the main board with the IF amplifiers, the preamplifier for the comb generator, the synchronization circuit and the power supply for the microwave amplifier
- the microwave section with the comb generator, the mixer and the RF amplifiers.

6.1.1 General

The main board is designed in 4 layers, the two inner layers being used for ground and power supply, the outer layers accommodating the signal lines. For reasons of space, the circuits are designed in a mixture of conventional and SMD technique, with the shielding and the covers contributing to the electrical characteristics. It is therefore necessary to screw the covers on tightly.

The microwave section consists of a Teflon board reinforced at the back with a milled case and its own cover. This section consists mainly of microstrip circuits into which chip components (R and C) and semiconductor chips without case are integrated. The electrical connections are made by soldering, bonding and glueing. The semiconductor chips without case and their bond connections are covered by a protective resin. The main board can be operated on its own, which does not apply to the microwave section, since the power supply for the amplifiers is accommodated on the main board.

6.1.2 Function of the Module

The YIG synchronization module contains the main control loop for complete synchronization of the YIG oscillator (1st local oscillator) for spans ≤5 MHz and for fine tuning and start/stop synchronization of the YIG oscillator for spans >5 MHz.

The module also provides the oscillator level for the 1st mixer of the receive section in the range between 5421.4 MHz and 10621.4 MHz.

The block diagram (Fig. 6-1) shows the individual functional units and the interfaces between the main board and the microwave section.

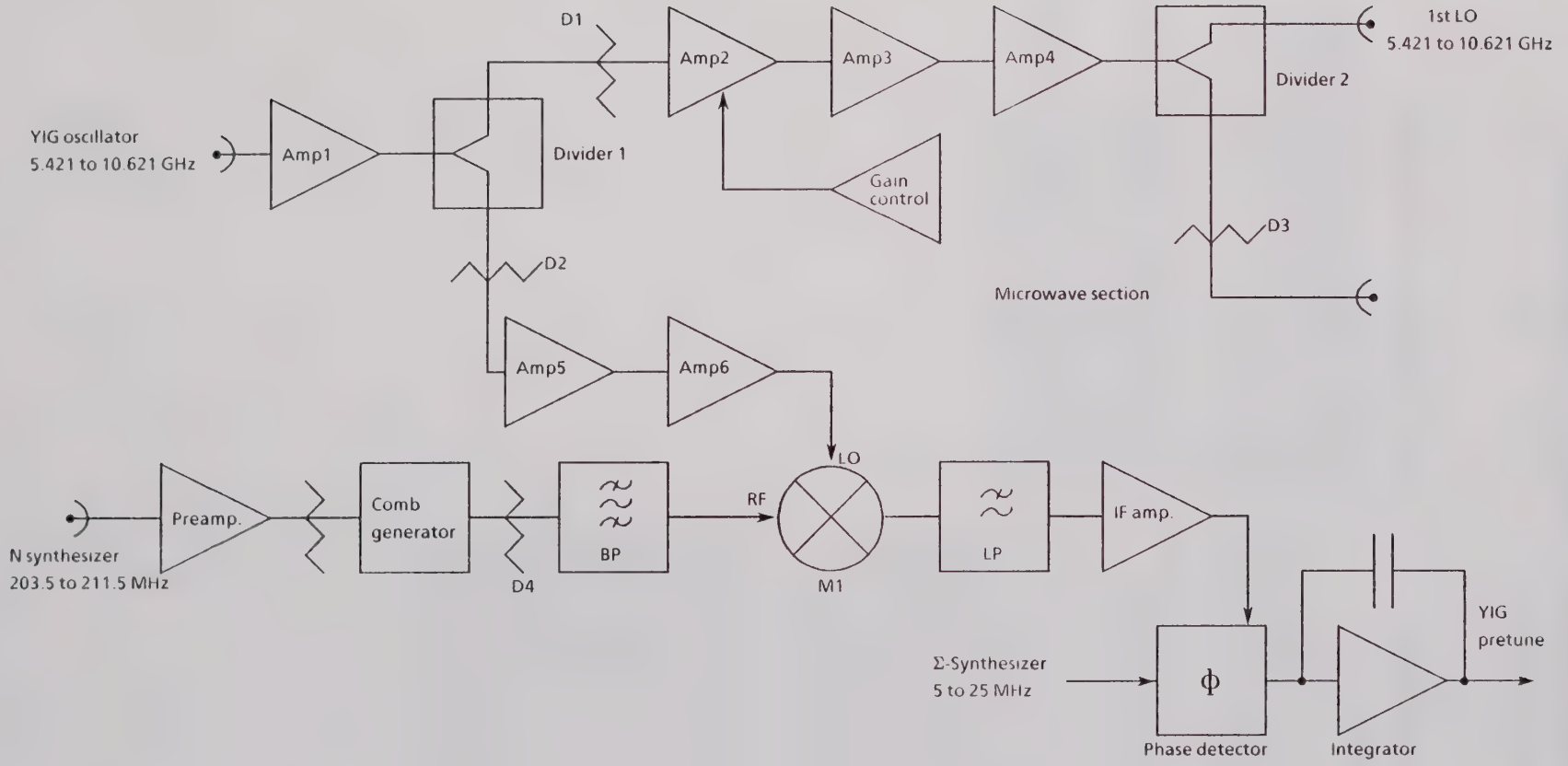

Fig. 6-1 Block diagram "YIG Synchronization"

6.1.3 Microwave Section

The microwave section consists of three parts:

- **LO path**
  It delivers the local oscillator level (LO) for the 1st mixer of the receive section.

- **Synchronization path**
  It delivers the LO level to drive the synchronous mixer M1.

- **Comb generator**
  It uses the signal of the N synthesizer to produce a comb spectrum which is converted by mixer M1 in order to be compared with the signal of the synthesizer.

6.1.3.1 LO Path

At the input of the module, the amplifier AMP1 (N1) is accommodated, which amplifies the signal of the YIG oscillator by 6 dB.

The amplifiers Amp1 to Amp 6 are MMICs (microwave monolithic integrated circuits) which provide a broadband gain of 6 dB. The chips without case are glued to a milled-out area on the module and are thus ideally connected to ground and to the heat sink. The electrical connection is made by means of bonding wires. Two bonds are required for the voltage supply (V + and V-) and two bonds for the RF connection (RF-in and RF-out). All lines on the module are gilded, which makes them fit for bonding and protects against environmental influences.

The amplifier Amp1 is followed by the power divider T1. It is a two-stage Wilkinson divider which evenly distributes the input power between the two output ports. The two cross resistances ensure broadband decoupling of the two output ports.

Before the signal is applied to Amp2 (N2), the level of D1 is attenuated by 3 dB. The gain of Amp2 can be varied between + 6 dB and -6 dB by means of the negative gate voltage MU2.

The amplifiers Amp3 (N3) and Amp4 (N4) boost the signal to + 20 dBm. Amp 4 consists of dual gate FETs and requires an additional fifth bond connection for the second gate.

The amplified signal is then fed to the power divider T2. T2 is an unbalanced two-stage Wilkinson divider which attenuates the signal by 2 dB in its main path and by 5 dB at its second port. Furthermore, what has been said for T1 also applies to T2.

The signal is taken from port 1 with a level of + 18 dBm to the output socket. The decoupled signal is fed to the second output socket X7 via an attenuator pad D3.

All amplifiers Amp1 to Amp6 are operated by two supply voltages each (MU 1 to 6 and PU 1 to 6). A circuit on the printed side of the main board ensures that the voltages are switched on and off at the correct time and that the operating points are correct. Each individual supply voltage is fed to the associated amplifier via loop-through filters screwed vertically into the microwave section.

6.1.3.2 Synchronization Path

The synchronization path starts at the output of divider T1. The signal is attenuated by 4 dB by attenuator pad D2. The amplifiers Amp5 and Amp6 amplify the signal by 6 dB each before applying it to the LO port of mixer M1.

Mixer M1 consists of a ceramic substrate which is glued into a milled case of its own. The signals are fed into the mixer case via glass feed-throughs. The mixer can be removed completely and replaced by loosening the screws and the three soldered connections.

6.1.3.3 Comb Generator

The signal of the N synthesizer is fed from X41 to the comb generator via a screwed-in coaxial connection. Via a matching circuit, it is applied to the multiplier diode V71 which generates a comb spectrum.

The attenuator pad D4 reduces the level and the printed bandpass filter BP limits the spectrum to a range between 5.4 GHz and 10.6 GHz before applying it to the RF port of mixer M1. Depending on the respective LO frequency, the mixer converts one line of the spectrum to the lower intermediate frequency (5 to 25 MHz). A separating filter constitutes a broadband termination for the IF port of the mixer, whereas the IF is fed to the printed side of the main board via a vertically screwed-in glass feedthrough.

6.1.4 Main Board

The main board of the module accommodates

- the preamplifier,
- the 3-stage IF amplifier,
- the phase detector with error detection
- and the operating point control for the MMICs.

6.1.4.1 Preamplifier

The preamplifier receives its input signal from the N synthesizer with a level of + 10 dBm. It is applied via an adjustable attenuator pad to amplifier stage V1, amplified to + 18 dBm and then passed on via an attenuator pad to the microwave section.

6.1.4.2 IF Amplifier

The signal IF-in is band-limited by a ring separating filter (cutoff frequency approx. 50 MHz) at the input of the IF path and then amplified by approx. 12 dB by the low-noise base stage (V11). A series-connected lowpass filter (C33 to C44) ensures further suppression of high-frequency interfering signals.

The second IF amplifier stage amplifies the IF level by approx. 12 dB again (N1), and the third IF stage (V21) provides an output level IF-out of approx. 0 dBm.

6.1.4.3 Phase Detector

The signal IF-out is converted to ECL level by the ECL gate D11 and, with signal A applied, divided by two in its frequency by the divider D12A or directly fed to the phase detector D14A, D13C where it is compared with the signal arriving from the summing loop module which is also converted to ECL level by gate D13A. The pulse output signals are smoothened and amplified by differential amplifier V32. The gain of V32 can be switched over using the line SYGAIN.

A DC tuning voltage is generated from this signal in the following differential integrator N13.

The lowpass filter C104, C105, L47, C106 removes reference frequency components which may still be present from the tuning voltage.

The tuning voltage is applied via X31 to the YIG pretune module which generates a tuning current which again regulates the frequency of the YIG oscillator.

The signal YIG FHI is directly generated by the phase detector D14 with the comparator N12D and terminates pretuning of the YIG oscillator by the YIG pretune module.

The signal YIG FHI is High if the YIG oscillator frequency is larger than the nominal frequency, and Low if smaller (TTL level).

The window comparator N12A,B monitors the signal STFYSY derived from the control voltage:

The relationship is:

$$V_{STFYSY} = \frac{V_{control}[V] + 15\ V}{22}$$

A control voltage of $>|\pm 10\ V|$ leads to a Low signal at N12/1, 2, 14 and causes the LED H95 to light.

6.1.4.4 Level Control

The negative gate voltage MU2 for amplifier Amp2 (N2) is set via potentiometer R272. The gain of Amp2 can be varied between -10 dB and +6 dB with voltage values between -0.5 dB and -2.6 V.

For temperature compensation, a temperature-dependent voltage generated by B1 is added to the value of the manipulated variable by R272.

Using jumper X62, the voltage MU2 can be set to a fixed value of -1.5 V.

6.1.4.5 Operating Point Control

Controller N21A ensures a constant voltage of +8.2 V at V43.3. Transistor V41 monitors the presence of the negative supply voltage and the circuit with V42 ensures a time delay when switching on.

Controllers N21B, C, D, N22A, B ensure a correct positive supply voltage of the MMICs (PU1 to 6) and at the same time of the current determined by the respective series resistors by varying the negative voltages (MU1 to 6) accordingly for each amplifier. Diodes V44, V46, V48, V50, V52 limit the voltages MU 1 to 6 to a maximum value of approx. 6.8 V.

6.2 Testing and Adjustment

6.2.1 LO Path

Signal at X6: P = +13 dBm, f = 5.4 to 10.6 GHz
Set PU2 to +5.9 V using R272. This corresponds to the maximum gain.

Measurement: Level at X11

Nominal value: P = > +17 dBm
If the level is not obtained, check the operating points of Amp1, 2, 3 and 4. The test points are located on the printed side of the main board.

Measurement: Voltage at MU1 to 4 und PU1 to 4

Nominal value:
MU1 to 4 = -0.8 V ±0.5 V
PU1 to 4 = +5.9 V ±0.2 V

6.2.2 Synchronization Path

Signal at X6: P = +13 dBm, f = 5.4 to 10.6 GHz
Replace mixer by test adapter

Measurement: Level at test adapter

Nominal value: P = > +15 dBm
If the level is not obtained, check the operating points of Amp1, 5 and 6.

Measurement: Voltage at MU5 to 6 and PU5 to 6

Nominal value:
MU5 = -0.8 V ±0.5 V PU5 = +5.9 V ±0.2 V
MU6 = -0.8 V ±0.5 V PU6 = +5.9 V ±0.2 V

6.2.3 Comb Generator and Preamplifier

Signal at X1: P = +8 dBm, f = 203 to 212 MHz
Measure the output level of the preamplifier at X41.3. The level can be varied using L1 and R2.

Measurement: Level at X41.3

Nominal value: f = 208 MHz,
P = +16.5 dBm ± 0.5 dB
First adjust for maximum using L1, then set the level using R2.

Measurement: Level at 203 MHz and 212 MHz

Nominal value: P = +16 dBm ± 1 dB
Plug in jumper X41, remove mixer M1 (see section 6.1.3.2) and replace by test adapter.

Signal at X1: P = +8 dBm, f = 208 MHz

Measurement: Level at test adapter

Nominal value: Comb spectrum with f = 5.4 to 10.6 GHz, level ≥ -35 dBm

6.2.4 IF Path

6.2.4.1 Conversion Loss of Mixer M1

Signal at X1: P = +8 dBm, f = 208 MHz

Signal at X6: P = +13 dBm,
f = 5428 MHz + n × 208 MHz (n = 0 to 25)

Measurement: Level at X42.2, 26 measurements with n = 0 to 25

Nominal value: P ≥ -40 dBm , f = 20 MHz

6.2.4.2 Gain of IF Amplifiers

Signal at X42.3: f = 5 to 20 MHz, P = -40 dBm

Measurement: Level at X43, X44 and X45

Nominal value: X43: P = -29 dBm ± 1 dB
X44: P = -17 dBm ± 3 dB
X45: P = 0 dBm ± 3 dB

6.2.5 Limiting Amplifier

Signal at X42.3: f = 5 to 20 MHz, P = -40 dBm, data bus DP2 ≙ H (TTL)

Measurement: Check for ECL level at R131 using oscilloscope probe (squarewave signal f = 5 to 20 MHz). Data bus DP2 = L: ECL level = 1/2 x f

Signal at X3: f = 10 to 20 MHz, P = +4 dBm

Measurement: Check for ECL level at R 151 using oscilloscope probe (squarewave signal f = 5 to 20 MHz)

6.2.6 Frequency Phase Detector

Signal at X42.3: f = 12 MHz, P = -40 dBm

Signal at X3: f = 10 MHz, P = +4dBm
jumpers X43, X44, X45 plugged in, data bus DP2 ≙ H (TTL)

Measurement: Check outputs of D14 for ECL level

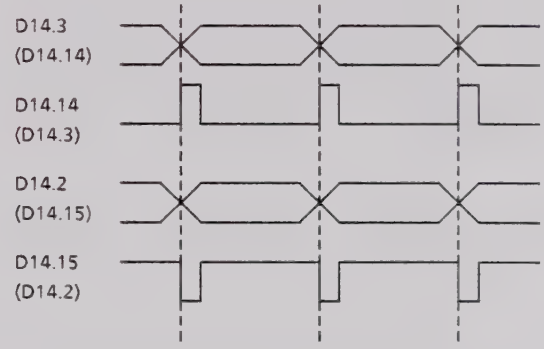

Check X21/A29: TTL level H (L)
Check X31.2: -13 V ± 1 V (+ 13 V ± 1 V)

Signal at X3: f = 14 MHz, P = +4 dBm.

Measurement: see above, the values in brackets are now valid. In both cases, LED H1 must light and X21/C20 must be Low (TTL level).

6.2.7 Level Control

Signal at X6: f = 5.4 to 10.6 GHz, P = + 13 dBm
Jumper X62 removed.
Adjust the output level between + 5 dBm and + 18 dBm minimum level using R272 and make sure that there are no sudden changes.

Adjustment: Output level > + 17 dBm

6.2.8 Synchronization

Prerequisites:
- Complete synthesizer in operation
- Frequency processor in operation
- YIG pretune and YIG oscillator in operation

Do not connect cable W31 to the YIG pretune module yet.

Instrument setting:
Center frequency = 0 Hz
Span = 0 Hz

Measurement: YIG nominal frequency with frequency counter

Nominal value: 5421.4 MHz + 0.1 MHz/-0 MHz
The nominal value applies immediately after entering the frequency, then an additional drift of 300 kHz/min. is permissible.
LED H1 must light and X21/C20 ≙ Log L (TTL)

Connect cable W31 to the YIG pretune module.
LED H1 must be extinguished and X21/C20 = LOG H (TTL)
Nominal value at X31.2 = 0 V ± 1 V
YIG nominal frequency = 5421.400 MHz

6.2.9 Switchover of Gain (SYGAIN)

Instrument setting: Span = 100 kHz

Measurement: Voltage at V33/3 = + 13.5 V ± 1 V

Instrument setting: Span = 100.01 kHz

Measurement: Voltage at V33/3 = -13.5 V ± 1 V

6.2.10 Spectral Purity of Synchronized YIG Oscillator Signal

Prerequisites: (see section 6.2.8)

Instrument setting:
Center frequency = 0 Hz
Span = 0 Hz

Measurement: Using spectrum analyzer at output X11

Nominal value: f = 5.4214 GHz, P = + 18 dBm, spurious > 80 dBc for Δ f = 10 kHz to 10 MHz.

6.2.11 Phase Noise and Spurious

Screw on both covers of the YIG synchronization module. A complete, tested instrument is required for this test.

Instrument setting:

- Connect 100-MHz calibration output to RF input
- Enter centre frequency 100 MHz, reference level -20 dBm

Check the phase noise and spurious with various spans and IF bandwidths (see table 6.1).
Measurements in average mode after 10 sweeps.
Use relative measurement (with marker) for this purpose:
-20 dBm ≙ reference value

Set the marker to Marker Phase/Noise for noise measurements; simple relative measurements (delta marker) for spurious.

Table 6-1

Instrument setting	Measurement at ± ... from carrier	Nominal noise marker dBc/Hz	Nominal spurious suppression dBc
Span = 5 MHz RBW = 10 kHz VBW = 1 kHz	300 kHz to 2,5 MHz	< -120	< -75
Span = 1 MHz RBW = 3 kHz VBW = 300 Hz	100 kHz to 300 kHz	< -115	< -75
Span = 200 kHz RBW = 1 kHz VBW = 100 Hz	30 kHz to 100 kHz	< -113	< -75
Span = 100 kHz RBW = 1 kHz VBW = 100 Hz	10 kHz to 30 kHz	< -110	< -75
Span = 10 kHz RBW = 100 Hz VBW = 10 Hz	1 kHz to 5 kHz	< -105	< -75
Span = 1 kHz RBW = 10 Hz VBW = 1 Hz	200 Hz to 500 Hz 100 Hz to 200 Hz	< -95 < -95	< -75 < -70

6.3 Troubleshooting

The YIG synchronization module cannot be operated on its own. It can only fulfill its function properly if all synthesizer modules, all reference modules, the YIG oscillator and the YIG pretune module operate correctly.

Therefore, an error message of the modules mentioned above brings about the error message ≪YTO UNLOCKED A 42≫ in most cases. Therefore, make sure to eliminate all other error messages before starting the troubleshooting procedure in the YIG synchronization module.

Two main errors may occur on the module:

1) LEVEL 1. LO,
i.e. the output level according to 6.2.7 is not obtained.

2) Error message:
YTO UNLOCKED A42,
i.e. the YIG oscillator cannot be synchronized.

Troubleshooting diagram 1:

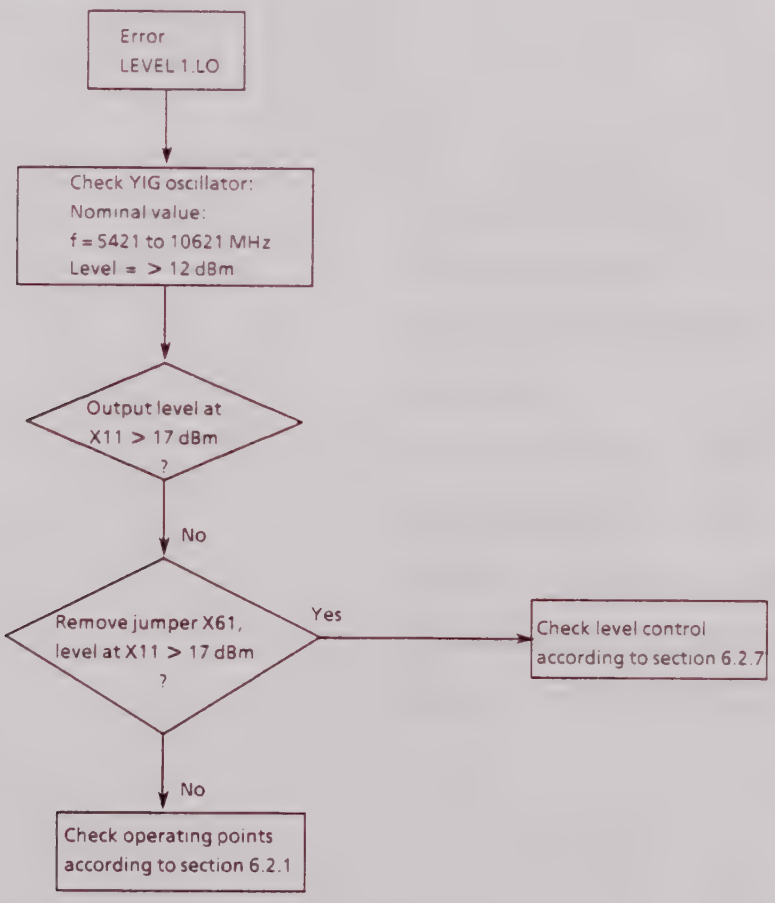

Troubleshooting diagram 2:

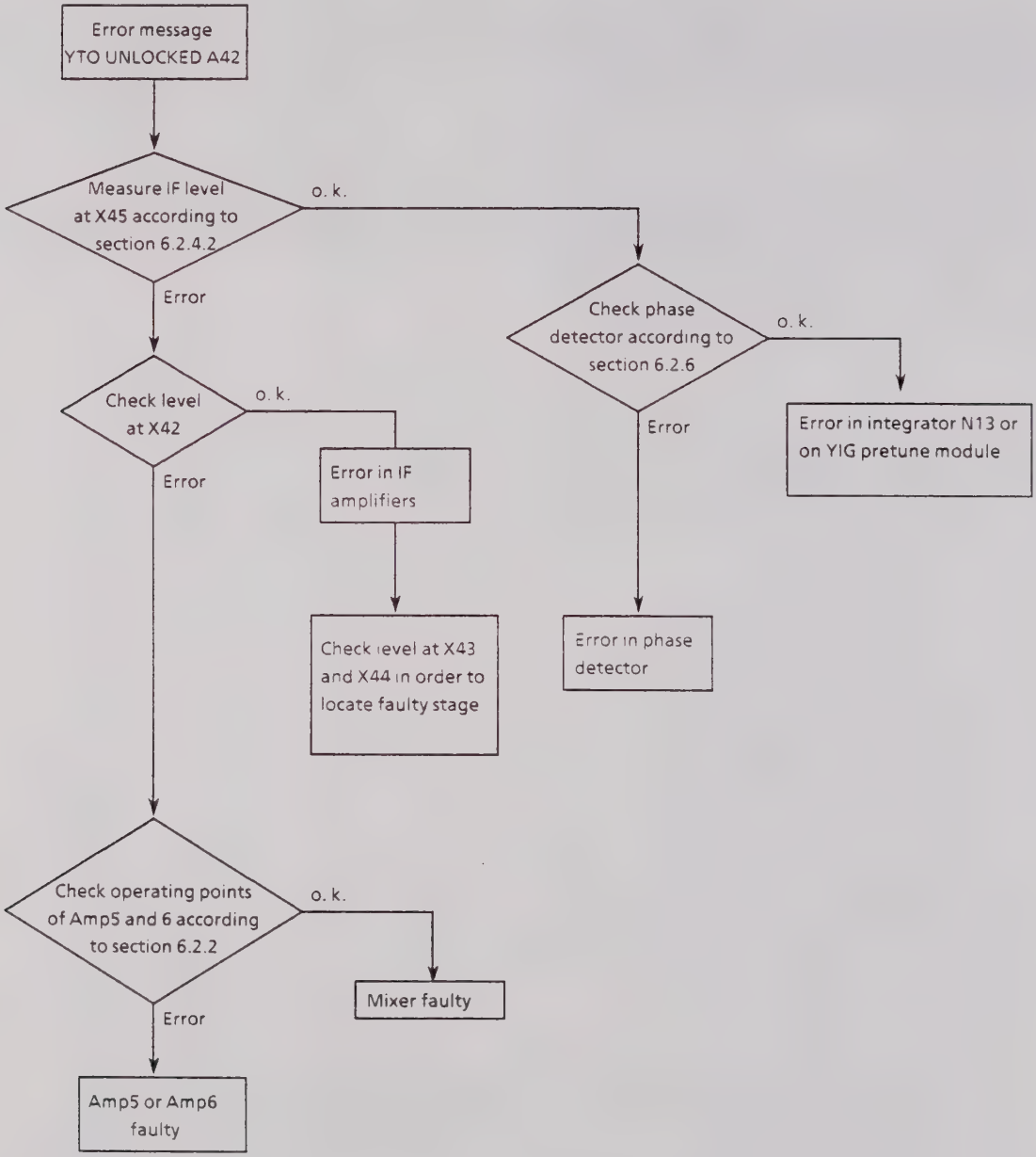

ROHDE&SCHWARZ

Schaltteillisten
Stromläufe
Bestückungspläne

Part lists
Circuit diagrams
Components plans

Listes des pièces détachées
Schémas de Circuit
Plans des composants

(R 29500 Bl 2)
895.1000 Bl. 2

Kennz. Comp.No.	Benennung Designation	Sachnummer Stock No.	Hersteller Manufacturer	Bezeichnung Designation	enthalten in contained in
.	ZUGEH.STROML./CIRC.DIAGR. 809.2010.01 S				
A1	ED RF-UNIT	849.2104.02			
B1	BJ LM335H TEMP.SENSOR PRECION TEMP.SENSOR	395.2867	NSC	LM335H	
C1	CC 12PF+-2%3X4NP0 CAPACITOR	CC 087.6435	VALVO	2222 678 10129	
C2	CC 12PF+-2%3X4NP0 CAPACITOR	CC 087.6435	VALVO	2222 678 10129	
C3	CC 220PF+-2%6X7N750 CAPACITOR	CC 087.6941	VALVO	2222 678 58221	
C5	CC 220PF+-2%6X7N750 CAPACITOR	CC 087.6941	VALVO	2222 678 58221	
C6	CC 12PF+-1%50V NP0 1206 CERAMIC CHIP CAPACITOR	CC 099.8744	VITRAMON	VJ1206 A 120 F FAT	
C7	CC 2,2NF+-10%5X6R2000 CAPACITOR	CC 087.7060	VALVO	2222 63051 222	
C11	CE 2,2UF+-20%20V 5X 4X 7 ELECTROLYTIC CAPACITOR	CE 022.8104	ROEDERSTEI	ETR 1 2,2/20 20%	
C12	CC 10NF-20+50%7X8R4000 CAPACITOR	CC 087.7525	VALVO	2222 63051 64051103	
C13	CC 1NF+-10%50VX7R 1206 CERAMIC CHIP CAPACITOR	CC 099.8438	VITRAMON	VJ1206Y102KFA	
C14	CC 10NF-20+50%7X8R4000 CAPACITOR	CC 087.7525	VALVO	2222 63051 64051103	
C21	CC 27PF+-1%50V NP0 1206 CERAMIC CHIP CAPACITOR	CC 099.8409	VITRAMON	VJ1206 A270F FAT	
C22	CC 68PF+-1%50V NP0 1206 CERAMIC CHIP CAPACITOR	CC 099.8815	VITRAMON	VJ1206 A 680 F FAT	
C23	CC 18PF+-1%50V NP0 1206 CERAMIC CHIP CAPACITOR	CC 099.8767	VITRAMON	VJ1206 A 180 F FAT	
C24	CC 100NF+-10%50V5K1200VIE CAPACITOR	CC 084.5350	UNION CARB	CK05BX104K	
C25	CC 39PF+-1%50V NP0 1206 CERAMIC CHIP CAPACITOR	CC 099.8796	VITRAMON	VJ1206 A 390 F FAT	
C26	CC 6,8PF+-0,25PF50V NP0 CERAMIC CHIP CAPACITOR	CC 007.8236	VITRAMON	VJ1206 A 6R8 C FAT	
C27	CC 100NF+-10%50V5K1200VIE CAPACITOR	CC 084.5350	UNION CARB	CK05BX104K	
C28	CC 10NF-20+50%7X8R4000 CAPACITOR	CC 087.7525	VALVO	2222 63051 64051103	
C29	CC .10NF-20+50%7X8R4000 CAPACITOR	CC 087.7525	VALVO	2222 63051 64051103	
C31	CC 220NF+-5% 50V X7R 1210 CERAMIC CAPACITOR CHIP	CC 520.6850	VITRAMON	VJ 1210 Y224 JFA	
C32	CC 10NF+-10%50V X7R 1206 CERAMIC CHIP CAPACITOR	CC 099.8521	VITRAMON	VJ1206 Y 103 K FAT	
C33	CC 15PF+-2%3X4NP0 CAPACITOR	CC 087.6441	VALVO	2222 678 10159	
C41	CC 68PF+-2%6X7NP0 CAPACITOR	CC 087.6529	VALVO	2222 678 10689	
C42	CC 100PF+-2%6X9NP0 CAPACITOR	CC 087.6541	VALVO	2222 678 10101	
C43	CC 68PF+-2%6X7NP0 CAPACITOR	CC 087.6529	VALVO	2222 678 10689	
C44	CC 15PF+-2%3X4NP0 CAPACITOR	CC 087.6441	VALVO	2222 678 10159	
C46	CC 100NF+-10%50V5K1200VIE CAPACITOR	CC 084.5350	UNION CARB	CK05BX104K	
C48	CC 100NF+-10%50V5K1200VIE CAPACITOR	CC 084.5350	UNION CARB	CK05BX104K	
C49	CC 10NF-20+50%7X8R4000 CAPACITOR	CC 087.7525	VALVO	2222 63051 64051103	
C51	CC 10NF-20+50%7X8R4000 CAPACITOR	CC 087.7525	VALVO	2222 63051 64051103	
C52	CC 10NF-20+50%7X8R4000 CAPACITOR	CC 087.7525	VALVO	2222 63051 64051103	
C53	CC 10NF-20+50%7X8R4000 CAPACITOR	CC 087.7525	VALVO	2222 63051 64051103	
C55	CC 100NF+-10%50V5K1200VIE CAPACITOR	CC 084.5350	UNION CARB	CK05BX104K	
C56	CC 10NF-20+50%7X8R4000 CAPACITOR	CC 087.7525	VALVO	2222 63051 64051103	
C57	CC 100NF+-10%50V5K1200VIE CAPACITOR	CC 084.5350	UNION CARB	CK05BX104K	

Für diese Unterlage behalten wir uns alle Rechte vor

Kennz. Comp.No.	Benennung Designation	Sachnummer Stock No.	Hersteller Manufacturer	Bezeichnung Designation	enthalten in contained in
C58	CC 100NF+-10%50V5K1200VIE CAPACITOR	CC 084.5350	UNION CARB	CK05BX104K	
C59	CC 2,7NF+-10%5X6R2000 CAPACITOR	CC 087.7077	VALVO	2222 63051 272	
C71	CC 10NF-20+50%7X8R4000 CAPACITOR	CC 087.7525	VALVO	2222 63051 64051103	
C72	CC 10NF-20+50%7X8R4000 CAPACITOR	CC 087.7525	VALVO	2222 63051 64051103	
C73	CC 10NF-20+50%7X8R4000 CAPACITOR	CC 087.7525	VALVO	2222 63051 64051103	
C75	CE 47UF-10+50% 40V 9X13 ELECTROLYTIC CAPACITOR	CE 006.7142	ROEDERST	EK 00 CB 247 G	
C76	CC 10NF-20+50%7X8R4000 CAPACITOR	CC 087.7525	VALVO	2222 63051 64051103	
C77	CC 10NF-20+50%7X8R4000 CAPACITOR	CC 087.7525	VALVO	2222 63051 64051103	
C78	CE 47UF-10+50% 40V 9X13 ELECTROLYTIC CAPACITOR	CE 006.7142	ROEDERST	EK 00 CB 247 G	
C79	CC 10NF-20+50%7X8R4000 CAPACITOR	CC 087.7525	VALVO	2222 63051 64051103	
C80	CC 10NF-20+50%7X8R4000 CAPACITOR	CC 087.7525	VALVO	2222 63051 64051103	
C81	CC 10NF-20+50%7X8R4000 CAPACITOR	CC 087.7525	VALVO	2222 63051 64051103	
C82	CC 10NF-20+50%7X8R4000 CAPACITOR	CC 087.7525	VALVO	2222 63051 64051103	
C83	CC 10NF-20+50%7X8R4000 CAPACITOR	CC 087.7525	VALVO	2222 63051 64051103	
C85	CC 10NF+-10%50V X7R 1206 CERAMIC CHIP CAPACITOR	CC 099.8521	VITRAMON	VJ1206 Y 103 K FAT	
C86	CE 47UF-10+50% 40V 9X13 ELECTROLYTIC CAPACITOR	CE 006.7142	ROEDERST	EK 00 CB 247 G	
C88	CE 47UF-10+50% 40V 9X13 ELECTROLYTIC CAPACITOR	CE 006.7142	ROEDERST	EK 00 CB 247 G	
C89	CC 100NF+-10%50V5K1200VIE CAPACITOR	CC 084.5350	UNION CARB	CK05BX104K	
C91	CE 4,7UF+-20%10V 5X 4X 7 ELECTROLYTIC CAPACITOR	CE 022.8056	ROEDERSTEI	ETR 1 4,7/10 20%	
C92	CC 10NF-20+50%7X8R4000 CAPACITOR	CC 087.7525	VALVO	2222 63051 64051103	
C95	CC 270PF+-2%6X9N750 CAPACITOR	CC 087.6958	DRALORIC	EDPU6X9/270/2%N750	
C96	CC 270PF+-2%6X9N750 CAPACITOR	CC 087.6958	DRALORIC	EDPU6X9/270/2%N750	
C98	CC 3,3NF+-10%6X7R2000 CAPACITOR	CC 087.7083	VALVO	2222 63051 332	
C99	CC 3,3NF+-10%6X7R2000 CAPACITOR	CC 087.7083	VALVO	2222 63051 332	
C101	CC 10NF-20+50%7X8R4000 CAPACITOR	CC 087.7525	VALVO	2222 63051 64051103	
C102	CC 10NF-20+50%7X8R4000 CAPACITOR	CC 087.7525	VALVO	2222 63051 64051103	
C104	CC 330PF+-2%6X9N750 CERAMIC CAPACITOR	CC 087.6964	VALVO	2222 678 58331	
C105	CC 18PF+-2%3X4NP0 CAPACITOR	CC 087.6458	VALVO	2222 678 10189	
C106	CC 330PF+-2%6X9N750 CERAMIC CAPACITOR	CC 087.6964	VALVO	2222 678 58331	
C107	CK 47ONF+-5%63V5RM MKT CAPACITOR	CK 099.2975	WIMA	MKS2/63/0,47UF/5%	
C109	CC 10NF-20+50%7X8R4000 CAPACITOR	CC 087.7525	VALVO	2222 63051 64051103	
C111	CC 10NF-20+50%7X8R4000 CAPACITOR	CC 087.7525	VALVO	2222 63051 64051103	
C112	CC 10NF-20+50%7X8R4000 CAPACITOR	CC 087.7525	VALVO	2222 63051 64051103	
C113	CC 10NF-20+50%7X8R4000 CAPACITOR	CC 087.7525	VALVO	2222 63051 64051103	
C115	CC 10NF-20+50%7X8R4000 CAPACITOR	CC 087.7525	VALVO	2222 63051 64051103	
C116	CC 10NF-20+50%7X8R4000 CAPACITOR	CC 087.7525	VALVO	2222 63051 64051103	
C117	CC 10NF-20+50%7X8R4000 CAPACITOR	CC 087.7525	VALVO	2222 63051 64051103	
C118	CC 10NF-20+50%7X8R4000 CAPACITOR	CC 087.7525	VALVO	2222 63051 64051103	
C119	CC 10NF-20+50%7X8R4000 CAPACITOR	CC 087.7525	VALVO	2222 63051 64051103	

Kennz. Comp.No.	Benennung Designation	Sachnummer Stock No.	Hersteller Manufacturer	Bezeichnung Designation	enthalten in contained in
C120	CC 10NF-20+50%7X8R4000 CAPACITOR	CC 087.7525	VALVO	2222 63051 64051103	
C121	CC 10NF-20+50%7X8R4000 CAPACITOR	CC 087.7525	VALVO	2222 63051 64051103	
C122	CC 10NF-20+50%7X8R4000 CAPACITOR	CC 087.7525	VALVO	2222 63051 64051103	
C125	CC 10NF-20+50%7X8R4000 CAPACITOR	CC 087.7525	VALVO	2222 63051 64051103	
C126	CC 10NF-20+50%7X8R4000 CAPACITOR	CC 087.7525	VALVO	2222 63051 64051103	
C127	CC 10NF-20+50%7X8R4000 CAPACITOR	CC 087.7525	VALVO	2222 63051 64051103	
C128	CC 10NF-20+50%7X8R4000 CAPACITOR	CC 087.7525	VALVO	2222 63051 64051103	
C129	CC 10NF-20+50%7X8R4000 CAPACITOR	CC 087.7525	VALVO	2222 63051 64051103	
C130	CC 10NF-20+50%7X8R4000 CAPACITOR	CC 087.7525	VALVO	2222 63051 64051103	
C131	CC 10NF-20+50%7X8R4000 CAPACITOR	CC 087.7525	VALVO	2222 63051 64051103	
C132	CC 10NF-20+50%7X8R4000 CAPACITOR	CC 087.7525	VALVO	2222 63051 64051103	
C133	CC 10NF-20+50%7X8R4000 CAPACITOR	CC 087.7525	VALVO	2222 63051 64051103	
C134	CC 10NF-20+50%7X8R4000 CAPACITOR	CC 087.7525	VALVO	2222 63051 64051103	
C135	CC 47NF+-10%50V5K1200VIEL CAPACITOR	CC 082.7810	UNION CARB	CK05BX473K	
C136	CC 10NF-20+50%7X8R4000 CAPACITOR	CC 087.7525	VALVO	2222 63051 64051103	
C137	CC 47NF+-10%50V5K1200VIEL CAPACITOR	CC 082.7810	UNION CARB	CK05BX473K	
C138	CC 10NF-20+50%7X8R4000 CAPACITOR	CC 087.7525	VALVO	2222 63051 64051103	
C141	CE 100UF-10+50% 25V 13X13 ELECTROLYTIC CAPACITOR	CE 208.4007	ROEDERST	ELKOEK100/25	
C142	CC 10NF+-10%50V X7R 1206 CERAMIC CHIP CAPACITOR	CC 099.8521	VITRAMON	VJ1206 Y 103 K FAT	
C143	CC 10NF+-10%50V X7R 1206 CERAMIC CHIP CAPACITOR	CC 099.8521	VITRAMON	VJ1206 Y 103 K FAT	
C145	CC 10NF+-10%50V X7R 1206 CERAMIC CHIP CAPACITOR	CC 099.8521	VITRAMON	VJ1206 Y 103 K FAT	
C146	CC 330NF+-10%50V X7R 1812 CERAMIC CHIP CAPACITOR	CC 007.7475	VITRAMON	VJ1812Y334KFAT	
C152	CC 33NF+-10% 50V X7R 1206 CERAMIC CHIP CAPACITOR	CC 007.5172	VITRAMON	VJ1206 Y 333 K FAT	
C155	CC 33NF+-10% 50V X7R 1206 CERAMIC CHIP CAPACITOR	CC 007.5172	VITRAMON	VJ1206 Y 333 K FAT	
C158	CC 33NF+-10% 50V X7R 1206 CERAMIC CHIP CAPACITOR	CC 007.5172	VITRAMON	VJ1206 Y 333 K FAT	
C161	CC 10NF+-10%50V X7R 1206 CERAMIC CHIP CAPACITOR	CC 099.8521	VITRAMON	VJ1206 Y 103 K FAT	
C162	CC 10NF+-10%50V X7R 1206 CERAMIC CHIP CAPACITOR	CC 099.8521	VITRAMON	VJ1206 Y 103 K FAT	
C164	CC 33NF+-10% 50V X7R 1206 CERAMIC CHIP CAPACITOR	CC 007.5172	VITRAMON	VJ1206 Y 333 K FAT	
C167	CC 33NF+-10% 50V X7R 1206 CERAMIC CHIP CAPACITOR	CC 007.5172	VITRAMON	VJ1206 Y 333 K FAT	
C181	CC 33PF+-2%4X5NP0 CAPACITOR	CC 087.6487	VALVO	2222 678 10339	
C182	CK 1UF+-10%50V5RM MKT CAPACITOR	CK 099.2998	WIMA	MKS2/50/1UF/10%	
C183	CK 1UF+-10%50V5RM MKT CAPACITOR	CK 099.2998	WIMA	MKS2/50/1UF/10%	
C185	CC 10NF+-10%50V X7R 1206 CERAMIC CHIP CAPACITOR	CC 099.8521	VITRAMON	VJ1206 Y 103 K FAT	
C187	CC 10NF-20+50%7X8R4000 CAPACITOR	CC 087.7525	VALVO	2222 63051 64051103	
C191	CC 1NF+-10%63V K2000 CERAMIC CAPACITOR	CC 022.0784	VALVO	2222 63051 102	
C192	CC 10NF-20+50%7X8R4000 CAPACITOR	CC 087.7525	VALVO	2222 63051 64051103	
C193	CC 10NF-20+50%7X8R4000 CAPACITOR	CC 087.7525	VALVO	2222 63051 64051103	
C211	CC 10NF-20+50%7X8R4000 CAPACITOR	CC 087.7525	VALVO	2222 63051 64051103	
C212	CC 10NF-20+50%7X8R4000 CAPACITOR	CC 087.7525	VALVO	2222 63051 64051103	

Für diese Unterlage behalten wir
ns alle Rechte vor

Kennz. Comp.No.	Benennung Designation	Sachnummer Stock No.	Hersteller Manufacturer	Bezeichnung Designation	enthalten in contained in
C213	CC 10NF-20+50%7X8R4000 CAPACITOR	CC 087.7525	VALVO	2222 63051 64051103	
C214	CC 10NF-20+50%7X8R4000 CAPACITOR	CC 087.7525	VALVO	2222 63051 64051103	
C221	CC 10NF-20+50%7X8R4000 CAPACITOR	CC 087.7525	VALVO	2222 63051 64051103	
C222	CC 10NF-20+50%7X8R4000 CAPACITOR	CC 087.7525	VALVO	2222 63051 64051103	
C223	CC 10NF-20+50%7X8R4000 CAPACITOR	CC 087.7525	VALVO	2222 63051 64051103	
C224	CC 10NF-20+50%7X8R4000 CAPACITOR	CC 087.7525	VALVO	2222 63051 64051103	
D1	BL PC74HC377P 8XD-FF EN OCTAL D-FLIP-FLOP	BL 806.0045	VALVO	PC74HC377P	
D2	BL MM74HC74N 2XD-FLIPFL DUAL D FLIP-FLOP	BL 571.3171	NSC	MM74HC74N	
D11	BL MC10102L 4X2INP.NORG NOR GATE	BL 350.0007	MOTOROLA	MC10102L	
D12	BL MC10131L 2XD FLIPFL FLIP FLOP	BL 475.1166	MOTOROLA	MC10131L	
D13	BL MC10102L 4X2INP.NORG NOR GATE	BL 350.0007	MOTOROLA	MC10102L	
D14	BL MC10131L 2XD FLIPFL FLIP FLOP	BL 475.1166	MOTOROLA	MC10131L	
H1	AF HLMP1700 LED RT RD3 LED	AF 099.9134	HP	HLMP1700	
L1	LD SPULE 30NH 1,5W FE-K CHOKE	300.6647	COMPONEX	E521HN-010023	
L2	LD 100NH 10% 0,080HM 1,4A CHOKE	LD 067.2740	DELEVAN	DROSSEL1025-94	
L3	LD 2,20UH10%0,400HMO,415A CHOKE	LD 067.2905	DELEVAN	DROSSEL1025-28	
L4	LD 1,20UH10%0,180HMO,620A CHOKE	LD 067.2870	DELEVAN	DROSSEL1025-22	
L11	LD 0,18UH10%0,120HM1,120A CHOKE	LD 067.2770	DELEVAN	DROSSEL1025-02	
L12	LD 0,12UH10%0,090HM1,300A CHOKE	LD 067.2757	DELEVAN	DROSSEL1025-96	
L13	LD 0,15UH10%0,100HM1,230A CHOKE	LD 067.2763	DELEVAN	DROSSEL1025-00	
L14	LD 0,15UH10%0,100HM1,230A CHOKE	LD 067.2763	DELEVAN	DROSSEL1025-00	
L15	LD 0,27UH10%0,160HMO,975A CHOKE	LD 067.2792	DELEVAN	DROSSEL1025-06	
L16	LD 33,0UH10%3,400HMO,130A CHOKE	LD 067.3047	DELEVAN	DROSSEL 1025-56	
L17	LF ROHRK.RD3,5X1,2X3 GETR TUBLAR CORE	LF 026.9257			
L18	LD 1,20UH10%0,180HMO,620A CHOKE	LD 067.2870	DELEVAN	DROSSEL1025-22	
L19	LD 0,12UH10%0,090HM1,300A CHOKE	LD 067.2757	DELEVAN	DROSSEL1025-96	
L21	LD 0,22UH10%0,140HM1,045A CHOKE	LD 067.2786	DELEVAN	DROSSEL1025-04	
L22	LD 0,22UH10%0,140HM1,045A CHOKE	LD 067.2786	DELEVAN	DROSSEL1025-04	
L23	LD 0,12UH10%0,090HM1,300A CHOKE	LD 067.2757	DELEVAN	DROSSEL1025-96	
L24	LD 1,20UH10%0,180HMO,620A CHOKE	LD 067.2870	DELEVAN	DROSSEL1025-22	
L25	LD 1,20UH10%0,180HMO,620A CHOKE	LD 067.2870	DELEVAN	DROSSEL1025-22	
L31	LD 1,20UH10%0,180HMO,620A CHOKE	LD 067.2870	DELEVAN	DROSSEL1025-22	
L41	LD 1,20UH10%0,180HMO,620A CHOKE	LD 067.2870	DELEVAN	DROSSEL1025-22	
L42	LD 1,20UH10%0,180HMO,620A CHOKE	LD 067.2870	DELEVAN	DROSSEL1025-22	
L43	LD 1,20UH10%0,180HMO,620A CHOKE	LD 067.2870	DELEVAN	DROSSEL1025-22	
L44	LD 1,20UH10%0,180HMO,620A CHOKE	LD 067.2870	DELEVAN	DROSSEL1025-22	
L45	LD 1,20UH10%0,180HMO,620A CHOKE	LD 067.2870	DELEVAN	DROSSEL1025-22	

Kennz. Comp.No.	Benennung Designation	Sachnummer Stock No.	Hersteller Manufacturer	Bezeichnung Designation	enthalten in contained in
L47	LD 47,0UH10%4,500HMO,110A CHOKE	LD 067.3060	DELEVAN	DROSSEL1025-60	
L48	LD 1,20UH10%0,180HMO,620A CHOKE	LD 067.2870	DELEVAN	DROSSEL1025-22	
L49	LD 1,20UH10%0,180HMO,620A CHOKE	LD 067.2870	DELEVAN	DROSSEL1025-22	
L51	LD 10 UH 10% 3R3 144 MA CHOKE	LD 026.4184	DELEVAN	DROSSEL1025-44	
L52	LD 10 UH 10% 3R3 144 MA CHOKE	LD 026.4184	DELEVAN	DROSSEL1025-44	
L53	LD 10 UH 10% 3R3 144 MA CHOKE	LD 026.4184	DELEVAN	DROSSEL1025-44	
L61	LD 1,20UH10%0,180HMO,620A CHOKE	LD 067.2870	DELEVAN	DROSSEL1025-22	
L62	LD 1,20UH10%0,180HMO,620A CHOKE	LD 067.2870	DELEVAN	DROSSEL1025-22	
N1	BM MSA0286 BB.AMPL BROADBAND AMPLIFIER	849.2079	AVANTEK	MSA0286	
N11	BO MC1558JG 2X OPAMP OPERATIONAL AMPLIFIER	275.0816	NSC	LM1558J	
N12	BO LM339N 4X COMPAR COMPARATOR	BO 342.2062	NSC	LM339N	
N13	BO SE5534AFE LOW N.OPAMP OPERATIONAL AMPLIFIER	BO 301.3335	SIGNETICS	SE5534AFE	
N21	BO LM224D 4XL.P.OPAMP OPERATIONAL AMPLIFIER	007.7852	SIGNETICS	LM224D	
N22	BO LM224D 4XL.P.OPAMP OPERATIONAL AMPLIFIER	007.7852	SIGNETICS	LM224D	
N31	BO LF412CN 2XFET OPAMP OPERATIONAL AMPLIFIER	356.0521	NSC	LF412CN	
N41	BO TL074IN 4XFET OPAMP OPERATIONAL AMPLIFIER	568.7528	TEXAS INST	TL074IN	
N42	BO LM393N 2X COMPAR COMPARATOR	BO 803.0696	NSC	LM393N	
P91 ..94	VL STECKLOETOESE 7,5X1,1 PLUG-IN SOLDERING LUG	VL 078.2747	-	R&S-ZCHNG.078.2747	
R1	RL 0,21W 274 OHM+-1%TK50 RESISTOR	RL 092.1373	RESISTA	MK1 274OHM 1% TK50	
R2	RS 0,5W100 OHM+-10%10X10X CERMET POTENTIOMETER	RS 247.7932	BOURNS	3386X-1-101	
R3	RG 100 OHM+-1%TK100 1206 CHIP RESISTOR	RG 006.8884	DALE	CRCW1206-10 100R F-T	
R4	RL 0,21W 274 OHM+-1%TK50 RESISTOR	RL 092.1373	RESISTA	MK1 274OHM 1% TK50	
R6	RG 12,1 OHM+-1%TK100 1206 CHIP RESISTOR	RG 006.8661	DALE	CRCW1206-10 12R1 F-T	
R7	RG 14,7 OHM+-2%TK200 1206 CHIP RESISTOR	006.8684	DRALORIC	CGB3216 14,7OHM2% TK	
R8	RL 0,35W 511 OHM+-1%TK50 RESISTOR	RL 083.0426	DRALORIC	SMA0207/511OHM-F-D	
RO1	RG 562 OHM+-1%TK100 1206 CHIP RESISTOR	RG 006.9068	DALE	CRCW1206-10 562R F-T	
RO2	RL 0,35W8,25 OHM+-1%TK50 METALFILMRESISTOR	RL 099.8080	RESISTA	MK2 8,25 OHM 1% TK50	
RO3	RG 562 OHM+-1%TK100 1206 CHIP RESISTOR	RG 006.9068	DALE	CRCW1206-10 562R F-T	
R11	RL 0,21W 2,74KOHM+-1%TK50 RESISTOR	RL 092.1496	RESISTA	MK1 2K74 1% TK50	
R12	RL 0,21W 10,0KOHM+-1%TK50 RESISTOR	RL 092.1567	RESISTA	MK1 10KO 1% TK50	
R13	RL 0,21W 3,32KOHM+-1%TK50 RESISTOR	RL 092.1509	RESISTA	MK1 3K32 1% TK50	
R15	RL 0,35W 33,2 OHM+-1%TK50 RESISTOR	RL 082.9359	DRALORIC	SMA0207/33,2OHM-F-D	
R16	RL 0,35W 33,2 OHM+-1%TK50 RESISTOR	RL 082.9359	DRALORIC	SMA0207/33,2OHM-F-D	
R17	RL 0,35W 43,2 OHM+-1%TK50 RESISTOR	RL 082.9465	DRALORIC	SMA0207/43,2OHM-F-D	
R19	RL 0,21W 47,5 OHM+-1%TK50 RESISTOR	RL 092.1267	RESISTA	MK1 47,5OHM 1% TK50	
R20	RG 47,5 OHM+-1%TK100 1206 RESISTOR CHIP	RG 007.5566	DALE	CRCW1206-10 47R5 F-T	
R21	RG 51,1 OHM+-1%TK100 1206 CHIP RESISTOR	RG 006.8810	DALE	CRCW1206 51,1OHM F T	

Für diese Unterlage behalten wir uns alle Rechte vor

Kennz. Comp.No.	Benennung Designation	Sachnummer Stock No.	Hersteller Manufacturer	Bezeichnung Designation	enthalten in contained in
R22	RL 0,21W 4,75KOHM+-1%TK50 RESISTOR	RL 092.1521	RESISTA	MK1 4K75 1% TK50	
R23	RL 0,21W 22,1KOHM+-1%TK50 RESISTOR	RL 092.1609	RESISTA	MK1 22K1 1% TK50	
R24	RL 0,21W 5,62KOHM+-1%TK50 RESISTOR	RL 092.1538	RESISTA	MK1 5K62 1% TK50	
R25	RL 0,21W 182 OHM+-1%TK50 RESISTOR	RL 092.1350	RESISTA	MK1 182OHM 1% TK50	
R31	RL 0,35W 348 OHM+-1%TK50 RESISTOR	RL 083.0278	DRALORIC	SMA0207/348OHM-F-D	
R41	RL 0,21W 475 OHM+-1%TK50 RESISTOR	RL 092.1409	RESISTA	MK1 475OHM 1% TK50	
R42	RL 0,21W 10,0 OHM+-1%TK50 RESISTOR	RL 092.1715	RESISTA	MK1 10,00HM 1% TK50	
R43	RL 0,21W 475 OHM+-1%TK50 RESISTOR	RL 092.1409	RESISTA	MK1 475OHM 1% TK50	
R45	RL 0,21W 82,5 OHM+-1%TK50 RESISTOR	RL 092.1315	RESISTA	MK1 82,50HM 1% TK50	
R46	RL 0,21W 1,50KOHM+-1%TK50 RESISTOR	RL 092.1467	RESISTA	MK1 1K5 1% TK50	
R47	RL 0,35W 1KOHM+-1%TK50 RESISTOR	RL 082.2160	DRALORIC	SMA0207/1K-F-C	
R48	RL 0,21W 82,5 OHM+-1%TK50 RESISTOR	RL 092.1315	RESISTA	MK1 82,50HM 1% TK50	
R49	RL 0,21W 681 OHM+-1%TK50 RESISTOR	RL 092.1421	RESISTA	MK1 681OHM 1% TK50	
R62	RL 0,35W 1KOHM+-1%TK50 RESISTOR	RL 082.2160	DRALORIC	SMA0207/1K-F-C	
R63	RL 0,35W 1KOHM+-1%TK50 RESISTOR	RL 082.2160	DRALORIC	SMA0207/1K-F-C	
R64	RL 0,35W 1KOHM+-1%TK50 RESISTOR	RL 082.2160	DRALORIC	SMA0207/1K-F-C	
R65	RL 0,35W 1KOHM+-1%TK50 RESISTOR	RL 082.2160	DRALORIC	SMA0207/1K-F-C	
R66	RL 0,35W 1KOHM+-1%TK50 RESISTOR	RL 082.2160	DRALORIC	SMA0207/1K-F-C	
R67	RL 0,35W 1KOHM+-1%TK50 RESISTOR	RL 082.2160	DRALORIC	SMA0207/1K-F-C	
R71	RL 0,35W9,09KOHM+-0,1%T25 RESISTOR	RL 084.2980	DRALORIC	SMA0207/9,09K-B-E	
R72	RL 0,35W4,75KOHM+-0,1%T25 RESISTOR	RL 084.2445	DRALORIC	SMA/207/4,75K-B-E	
R73	RL 0,21W 1,00KOHM+-1%TK50 RESISTOR	RL 092.1444	RESISTA	MK1 1K00 1% TK50	
R75	RL 0,21W 1,00KOHM+-1%TK50 RESISTOR	RL 092.1444	RESISTA	MK1 1K00 1% TK50	
R76	RL 0,21W 100 KOHM+-1%TK50 RESISTOR	RL 092.1680	RESISTA	MK1 100K 10% TK50	
R78	RL 0,35W 1MOHM+-1%TK50 RESISTOR	RL 082.7862	DRALORIC	SMA0207/1M-F-D	
R81	RL 0,35W 3,57KOHM+-1%TK50 RESISTOR	RL 083.1022	DRALORIC	SMA0207/3,57K-F-D	
R82	RL 0,21W 681 OHM+-1%TK50 RESISTOR	RL 092.1421	RESISTA	MK1 681OHM 1% TK50	
R83	RL 0,21W 681 OHM+-1%TK50 RESISTOR	RL 092.1421	RESISTA	MK1 681OHM 1% TK50	
R84	RL 0,21W 1,00KOHM+-1%TK50 RESISTOR	RL 092.1444	RESISTA	MK1 1K00 1% TK50	
R86	RL 0,21W 3,32KOHM+-1%TK50 RESISTOR	RL 092.1509	RESISTA	MK1 3K32 1% TK50	
R87	RL 0,21W 3,32KOHM+-1%TK50 RESISTOR	RL 092.1509	RESISTA	MK1 3K32 1% TK50	
R88	RL 0,21W 10,0KOHM+-1%TK50 RESISTOR	RL 092.1567	RESISTA	MK1 10K0 1% TK50	
R89	RL 0,21W 10,0KOHM+-1%TK50 RESISTOR	RL 092.1567	RESISTA	MK1 10K0 1% TK50	
R91	RL 0,21W 10,0KOHM+-1%TK50 RESISTOR	RL 092.1567	RESISTA	MK1 10K0 1% TK50	
R92	RL 0,21W 10,0KOHM+-1%TK50 RESISTOR	RL 092.1567	RESISTA	MK1 10K0 1% TK50	
R94	RL 0,21W 1,00KOHM+-1%TK50 RESISTOR	RL 092.1444	RESISTA	MK1 1K00 1% TK50	
R95	RL 0,35W 20,0KOHM+-1%TK50 RESISTOR	RL 083.1522	DRALORIC	SMA/207/20K-F-C	
R96	RL 0,35W 20,0KOHM+-1%TK50 RESISTOR	RL 083.1522	DRALORIC	SMA/207/20K-F-C	
R97	RL 0,21W 332 OHM+-1%TK50 RESISTOR	RL 092.1380	RESISTA	MK1 332OHM 1% TK50	

Kennz. Comp.No.	Benennung Designation	Sachnummer Stock No.	Hersteller Manufacturer	Bezeichnung Designation	enthalten in contained in
R101	RL 0,35W 301 OHM+-1%TK50 RESISTOR	RL 083.0210	DRALORIC	SMA0207/3010HM-F-D	
R102	RL 0,21W 22,1 OHM+-1%TK50 RESISTOR	RL 092.1221	RESISTA	MK1 22,10HM 1% TK50	
R106	RL 0,21W 332 OHM+-1%TK50 RESISTOR	RL 092.1380	RESISTA	MK1 3320HM 1% TK50	
R108	RL 0,21W 150 OHM+-1%TK50 RESISTOR	RL 092.1344	RESISTA	MK1 1500HM 1% TK50	
R109	RL 0,21W 10,0KOHM+-1%TK50 RESISTOR	RL 092.1567	RESISTA	MK1 10K0 1% TK50	
R110	RL 0,21W 2,21KOHM+-1%TK50 RESISTOR	RL 092.1480	RESISTA	MK1 2K21 1% TK50	
R112	RL 0,21W 1,50KOHM+-1%TK50 RESISTOR	RL 092.1467	RESISTA	MK1 1K5 1% TK50	
R113	RL 0,21W 18,2KOHM+-1%TK50 RESISTOR	RL 092.1596	RESISTA	MK1 18K2 1% TK50	
R121	RL 0,21W 100 OHM+-1%TK50 DEPOS.-CARBON RESISTOR	RL 092.1321	RESISTA	MK1 1000HM 1% TK50	
R122	RL 0,21W 100 OHM+-1%TK50 DEPOS.-CARBON RESISTOR	RL 092.1321	RESISTA	MK1 1000HM 1% TK50	
R123	RL 0,35W 200 OHM+-1%TK50 RESISTOR	RL 083.0049	DRALORIC	SMA0207/2000HM-F-D	
R124	RL 0,35W 511 OHM+-1%TK50 RESISTOR	RL 083.0426	DRALORIC	SMA0207/5110HM-F-D	
R125	RL 0,35W 511 OHM+-1%TK50 RESISTOR	RL 083.0426	DRALORIC	SMA0207/5110HM-F-D	
R126	RL 0,35W 511 OHM+-1%TK50 RESISTOR	RL 083.0426	DRALORIC	SMA0207/5110HM-F-D	
R127	RL 0,35W 511 OHM+-1%TK50 RESISTOR	RL 083.0426	DRALORIC	SMA0207/5110HM-F-D	
R128	RL 0,35W 511 OHM+-1%TK50 RESISTOR	RL 083.0426	DRALORIC	SMA0207/5110HM-F-D	
R129	RL 0,35W 511 OHM+-1%TK50 RESISTOR	RL 083.0426	DRALORIC	SMA0207/5110HM-F-D	
R131	RL 0,35W 511 OHM+-1%TK50 RESISTOR	RL 083.0426	DRALORIC	SMA0207/5110HM-F-D	
R132	RL 0,35W 200 OHM+-1%TK50 RESISTOR	RL 083.0049	DRALORIC	SMA0207/2000HM-F-D	
R133	RL 0,35W 200 OHM+-1%TK50 RESISTOR	RL 083.0049	DRALORIC	SMA0207/2000HM-F-D	
R134	RL 0,35W 511 OHM+-1%TK50 RESISTOR	RL 083.0426	DRALORIC	SMA0207/5110HM-F-D	
R135	RL 0,35W 511 OHM+-1%TK50 RESISTOR	RL 083.0426	DRALORIC	SMA0207/5110HM-F-D	
R136	RL 0,35W 511 OHM+-1%TK50 RESISTOR	RL 083.0426	DRALORIC	SMA0207/5110HM-F-D	
R137	RL 0,35W 511 OHM+-1%TK50 RESISTOR	RL 083.0426	DRALORIC	SMA0207/5110HM-F-D	
R138	RL 0,21W 1,00KOHM+-1%TK50 RESISTOR	RL 092.1444	RESISTA	MK1 1K00 1% TK50	
R139	RL 0,35W 10,0KOHM+-1%TK50 RESISTOR	RL 083.1297	DRALORIC	SMA0207/10K-F-D	
R141	RL 0,21W 1,00KOHM+-1%TK50 RESISTOR	RL 092.1444	RESISTA	MK1 1K00 1% TK50	
R142	RL 0,35W 10,0KOHM+-1%TK50 RESISTOR	RL 083.1297	DRALORIC	SMA0207/10K-F-D	
R145	RG 301 OHM+-1%TK100 1206 RESISTOR CHIP	RG 007.5643	DALE	CRCW1206-10 301R F-T	
R146	RG 16,2 OHM+-1%TK100 1206 CHIP RESISTOR	RG 006.8690	DALE	CRCW1206-10 16R2 F-T	
R147	RG 82,5 OHM+-1%TK100 1206 CHIP RESISTOR	RG 006.8861	DALE	CRCW1206-10 82R5 F-T	
R148	RL 0,21W 100 OHM+-1%TK50 DEPOS.-CARBON RESISTOR	RL 092.1321	RESISTA	MK1 1000HM 1% TK50	
R149	RL 0,35W 200 OHM+-1%TK50 RESISTOR	RL 083.0049	DRALORIC	SMA0207/2000HM-F-D	
R151	RL 0,35W 511 OHM+-1%TK50 RESISTOR	RL 083.0426	DRALORIC	SMA0207/5110HM-F-D	
R160	RL 0,21W 10,0 OHM+-1%TK50 RESISTOR	RL 092.1715	RESISTA	MK1 10,00HM 1% TK50	
R161	RL 0,21W 1,00KOHM+-1%TK50 RESISTOR	RL 092.1444	RESISTA	MK1 1K00 1% TK50	
R162	RL 0,21W 1,00KOHM+-1%TK50 RESISTOR	RL 092.1444	RESISTA	MK1 1K00 1% TK50	
R171	RG 20,0KOHM+-1%TK100 1206 RESISTOR CHIP	RG 007.5866	DALE	CRCW1206-10 20K F-T	
R172	RG 24,3KOHM+-1%TK100 1206 RESISTOR CHIP	RG 007.5889	DALE	CRCW1206-10 24K3 F-T	

Für diese Unterlage behalten wir uns alle Rechte vor

Kennz. Comp.No.	Benennung Designation	Sachnummer Stock No.	Hersteller Manufacturer	Bezeichnung Designation	enthalten in contained in
R173	RG 1000 OHM+-1%TK100 1206 CHIP RESISTOR	RG 006.7271	DALE	CRCW1206-10 1K F-T	
R175	RG 15,0KOHM+-1%TK100 1206 RESISTOR CHIP	RG 007.5843	DALE	CRCW1206-10 15K F-T	
R176	RG 12,1KOHM+-1%TK100 1206 CHIP RESISTOR	RG 007.0841	DALE	CRCW1206-10 12K1 F-T	
R178	RG 22,1KOHM+-1%TK100 1206 RESISTOR CHIP	RG 007.5872	DALE	CRCW1206-10 22K1 F-T	
R181	RG 150 KOHM+-1%TK100 1206 RESISTOR CHIP	RG 007.5972	DALE	CRCW1206-10 150K F-T	
R182	RG 121KOHM+-1%TK100 1206 CHIP RESISTOR	RG 007.1960	DALE	CRCW1206-10 121K F-T	
R191	RG 15,0KOHM+-1%TK100 1206 RESISTOR CHIP	RG 007.5843	DALE	CRCW1206-10 15K F-T	
R192	RG 39,2KOHM+-1%TK100 1206 RESISTOR CHIP	RG 007.5937	DALE	CRCW1206-10 39K2 F-T	
R193	RG 68,1 OHM+-1%TK100 1206 CHIP RESISTOR	RG 006.8849	DALE	CRCW1206-10 68R1 F-T	
R194	RG 68,1 OHM+-1%TK100 1206 CHIP RESISTOR	RG 006.8849	DALE	CRCW1206-10 68R1 F-T	
R195	RG 33,2KOHM+-1%TK100 1206 RESISTOR CHIP	RG 007.5914	DALE	CRCW1206-10 33K2 F-T	
R196	RG 10 KOHM+-1%TK100 1206 CHIP RESISTOR	RG 007.0793	DALE	CRCW1206-10 10K F-T	
R201	RG 15,0KOHM+-1%TK100 1206 RESISTOR CHIP	RG 007.5843	DALE	CRCW1206-10 15K F-T	
R202	RG 39,2KOHM+-1%TK100 1206 RESISTOR CHIP	RG 007.5937	DALE	CRCW1206-10 39K2 F-T	
R203	RG 68,1 OHM+-1%TK100 1206 CHIP RESISTOR	RG 006.8849	DALE	CRCW1206-10 68R1 F-T	
R204	RG 68,1 OHM+-1%TK100 1206 CHIP RESISTOR	RG 006.8849	DALE	CRCW1206-10 68R1 F-T	
R205	RG 33,2KOHM+-1%TK100 1206 RESISTOR CHIP	RG 007.5914	DALE	CRCW1206-10 33K2 F-T	
R206	RG 10 KOHM+-1%TK100 1206 CHIP RESISTOR	RG 007.0793	DALE	CRCW1206-10 10K F-T	
R211	RG 15,0KOHM+-1%TK100 1206 RESISTOR CHIP	RG 007.5843	DALE	CRCW1206-10 15K F-T	
R212	RG 39,2KOHM+-1%TK100 1206 RESISTOR CHIP	RG 007.5937	DALE	CRCW1206-10 39K2 F-T	
R213	RG 39,2 OHM+-1%TK100 1206 RESISTOR CHIP	RG 007.5543	DALE	CRCW1206-10 39R2 F-T	
R214	RG 39,2 OHM+-1%TK100 1206 RESISTOR CHIP	RG 007.5543	DALE	CRCW1206-10 39R2 F-T	
R215	RG 33,2KOHM+-1%TK100 1206 RESISTOR CHIP	RG 007.5914	DALE	CRCW1206-10 33K2 F-T	
R216	RG 10 KOHM+-1%TK100 1206 CHIP RESISTOR	RG 007.0793	DALE	CRCW1206-10 10K F-T	
R217	RG 39,2 OHM+-1%TK100 1206 RESISTOR CHIP	RG 007.5543	DALE	CRCW1206-10 39R2 F-T	
R221	RG 15,0KOHM+-1%TK100 1206 RESISTOR CHIP	RG 007.5843	DALE	CRCW1206-10 15K F-T	
R222	RG 39,2KOHM+-1%TK100 1206 RESISTOR CHIP	RG 007.5937	DALE	CRCW1206-10 39K2 F-T	
R223	RG 68,1 OHM+-1%TK100 1206 CHIP RESISTOR	RG 006.8849	DALE	CRCW1206-10 68R1 F-T	
R224	RG 68,1 OHM+-1%TK100 1206 CHIP RESISTOR	RG 006.8849	DALE	CRCW1206-10 68R1 F-T	
R225	RG 33,2KOHM+-1%TK100 1206 RESISTOR CHIP	RG 007.5914	DALE	CRCW1206-10 33K2 F-T	
R226	RG 10 KOHM+-1%TK100 1206 CHIP RESISTOR	RG 007.0793	DALE	CRCW1206-10 10K F-T	
R231	RG 15,0KOHM+-1%TK100 1206 RESISTOR CHIP	RG 007.5843	DALE	CRCW1206-10 15K F-T	
R232	RG 39,2KOHM+-1%TK100 1206 RESISTOR CHIP	RG 007.5937	DALE	CRCW1206-10 39K2 F-T	
R233	RG 68,1 OHM+-1%TK100 1206 CHIP RESISTOR	RG 006.8849	DALE	CRCW1206-10 68R1 F-T	
R234	RG 68,1 OHM+-1%TK100 1206 CHIP RESISTOR	RG 006.8849	DALE	CRCW1206-10 68R1 F-T	
R235	RG 33,2KOHM+-1%TK100 1206 RESISTOR CHIP	RG 007.5914	DALE	CRCW1206-10 33K2 F-T	
R236	RG 10 KOHM+-1%TK100 1206 CHIP RESISTOR	RG 007.0793	DALE	CRCW1206-10 10K F-T	
R248	RG 68,1 OHM+-1%TK100 1206 CHIP RESISTOR	RG 006.8849	DALE	CRCW1206-10 68R1 F-T	
R249	RG 68,1 OHM+-1%TK100 1206 CHIP RESISTOR	RG 006.8849	DALE	CRCW1206-10 68R1 F-T	

Kennz. Comp.No.	Benennung Designation	Sachnummer Stock No.	Hersteller Manufacturer	Bezeichnung Designation	enthalten in contained in
R261	RL 0,35W 332 KOHM+-1%TK50 RESISTOR	RL 083.2441	DRALORIC	SMA0207/332K-F-C	
R262	RL 0,21W 10,0KOHM+-1%TK50 RESISTOR	RL 092.1567	RESISTA	MK1 10KO 1% TK50	
R263	RG 221 KOHM+-1%TK100 1206 RESISTOR CHIP	RG 007.6004	DALE	CRCW1206-10 221K F-T	
R264	RL 0,21W 10,0KOHM+-1%TK50 RESISTOR	RL 092.1567	RESISTA	MK1 10KO 1% TK50	
R266	RG 221 KOHM+-1%TK100 1206 RESISTOR CHIP	RG 007.6004	DALE	CRCW1206-10 221K F-T	
R267	RL 0,35W 5,62KOHM+-1%TK50 RESISTOR	RL 082.2190	DRALORIC	SMA0207/5,62K-F-C	
R268	RL 0,21W 3,32KOHM+-1%TK50 RESISTOR	RL 092.1509	RESISTA	MK1 3K32 1% TK50	
R269	RL 0,21W 1,00KOHM+-1%TK50 RESISTOR	RL 092.1444	RESISTA	MK1 1K00 1% TK50	
R271	RL 0,35W 1MOHM+-1%TK50 RESISTOR	RL 082.7862	DRALORIC	SMA0207/1M-F-D	
R272	RS 0,3W 10KOHM+-10%CERMET DEPOS-CARBON POTENTIOMET	RS 086.7944	BOURNS	3292X-1- 10KOHM+-10%	
R273	RL 0,21W 100 KOHM+-1%TK50 RESISTOR	RL 092.1680	RESISTA	MK1 100K 10% TK50	
R275	RL 0,21W 1,00KOHM+-1%TK50 RESISTOR	RL 092.1444	RESISTA	MK1 1K00 1% TK50	
R276	RL 0,21W 100 KOHM+-1%TK50 RESISTOR	RL 092.1680	RESISTA	MK1 100K 10% TK50	
R278	RL 0,35W 1MOHM+-1%TK50 RESISTOR	RL 082.7862	DRALORIC	SMA0207/1M-F-D	
R279	RL 0,21W 10,0KOHM+-1%TK50 RESISTOR	RL 092.1567	RESISTA	MK1 10KO 1% TK50	
R281	RL 0,21W 10,0KOHM+-1%TK50 RESISTOR	RL 092.1567	RESISTA	MK1 10KO 1% TK50	
R282	RL 0,21W 10,0KOHM+-1%TK50 RESISTOR	RL 092.1567	RESISTA	MK1 10KO 1% TK50	
R284	RL 0,21W 10,0KOHM+-1%TK50 RESISTOR	RL 092.1567	RESISTA	MK1 10KO 1% TK50	
R285	RL 0,21W 1,82KOHM+-1%TK50 RESISTOR	RL 092.1473	RESISTA	MK1 1K82 1% TK50	
R286	RL 0,21W 332 OHM+-1%TK50 RESISTOR	RL 092.1380	RESISTA	MK1 332OHM 1% TK50	
R288	RL 0,21W 10,0KOHM+-1%TK50 RESISTOR	RL 092.1567	RESISTA	MK1 10KO 1% TK50	
R289	RL 0,21W 4,75KOHM+-1%TK50 RESISTOR	RL 092.1521	RESISTA	MK1 4K75 1% TK50	
R291	RL 0,21W 10,0KOHM+-1%TK50 RESISTOR	RL 092.1567	RESISTA	MK1 10KO 1% TK50	
R292	RL 0,21W 15,0KOHM+-1%TK50 RESISTOR	RL 092.1580	RESISTA	MK1 15K 1% TK50	
R293	RL 0,21W 1,00KOHM+-1%TK50 RESISTOR	RL 092.1444	RESISTA	MK1 1K00 1% TK50	
R295	RL 0,21W 10,0KOHM+-1%TK50 RESISTOR	RL 092.1567	RESISTA	MK1 10KO 1% TK50	
R296	RL 0,21W 15,0KOHM+-1%TK50 RESISTOR	RL 092.1580	RESISTA	MK1 15K 1% TK50	
R297	RL 0,21W 1,00KOHM+-1%TK50 RESISTOR	RL 092.1444	RESISTA	MK1 1K00 1% TK50	
T10	LU UEBERTRAGER TRANSFORMER	808.0113			
V1	AK BFR96S N 15V 100MA TRANSISTOR	644.0830	VALVO	BFR96S	
V2	AK BCY79IX P 45V 200MA TRANSISTOR	AK 010.3777	VALVO	BCY79IX	
V11	AK NE85632 N 12V 100MA TRANSISTOR	354.6839	NEC	NE85632	
V12	AK BC560B P 45V 100MA TRANSISTOR	AK 007.2044	SIEMENS	BC560B GURT,POL.CBE	
V21	AK BFR90 N 15V 25MA TRANSISTOR	236.9139	VALVO	BFR90	
V31	AK BC337-40 N 45V 800MA TRANSISTOR	AK 815.7684	VALVO	BC337-40GEGURTET	
V32	AK MAT01AH NPN 45V DUAL DUAL-TRANSISTOR	AK 257.4842	PMI	MAT01AH	
V33	AM J111A N-D 35V JFET FET	AM 007.2038	SILICONIX	J111A GEGURTET AMMOP	
V34	AD 1N4448 75V 0A15 UDI DIODE	AD 012.0700	TEXAS INST	1N4448 GEGURTET	

Für diese Unterlage behalten wir uns alle Rechte vor

Kennz. Comp.No.	Benennung Designation	Sachnummer Stock No.	Hersteller Manufacturer	Bezeichnung Designation	enthalten in contained in
V41	AK BCX70H N 45V 200MA TRANSISTOR	AK 007.3105	VALVO	BCX70H	
V42	AK BCX70H N 45V 200MA TRANSISTOR	AK 007.3105	VALVO	BCX70H	
V43	AM VN66AD N-E 60V MOSF POWER MOSF	336.4215	SILICONIX	VN66AD	
V44	AE BZV55/C6V8 0,5W ZDI ZENER DIODE	AE 006.9868	VALVO	BZV55/C6V8	
V45	AD BAS32 75V 0A20 UDI DIODE	AD 006.7288	VALVO	BAS32	
V46	AE BZV55/C6V8 0,5W ZDI ZENER DIODE	AE 006.9868	VALVO	BZV55/C6V8	
V47	AD BAS32 75V 0A20 UDI DIODE	AD 006.7288	VALVO	BAS32	
V48	AE BZV55/C6V8 0,5W ZDI ZENER DIODE	AE 006.9868	VALVO	BZV55/C6V8	
V49	AD BAS32 75V 0A20 UDI DIODE	AD 006.7288	VALVO	BAS32	
V50	AE BZV55/C6V8 0,5W ZDI ZENER DIODE	AE 006.9868	VALVO	BZV55/C6V8	
V51	AD BAS32 75V 0A20 UDI DIODE	AD 006.7288	VALVO	BAS32	
V52	AE BZV55/C6V8 0,5W ZDI ZENER DIODE	AE 006.9868	VALVO	BZV55/C6V8	
V53	AD BAS32 75V 0A20 UDI DIODE	AD 006.7288	VALVO	BAS32	
V56	AE BZV55/C6V8 0,5W ZDI ZENER DIODE	AE 006.9868	VALVO	BZV55/C6V8	
V61	AD 1N4448 75V 0A15 UDI DIODE	AD 012.0700	TEXAS INST	1N4448 GEGURTET	
W1	DX HF-KABEL RF-CABLE	849.2256			
W2	DX HF-KABEL RF-CABLE	849.2262			
W3	DX HF-KABEL RF-CABLE	849.2285			
W31	DX VERBINDUNGSKABEL CABLE	849.2279			
X1	FJ EINBAUWINKELST. SMC ANGLE CONNECTOR	FJ 249.9684	RADIALL	R 112 669	
X2	FJ EINBAUWINKELST. SMC ANGLE CONNECTOR	FJ 249.9684	RADIALL	R 112 669	
X21	FP IND.STECKERLEISTE 64 P MALE MULTIPOINT CONNECTOR	FP 273.0490	PANDUIT	100-964-033/999	
X32	FP WINKELSTECKERLEIST.36P ANGLE PIN CONNECTOR 4-POLIG	FP 243.3578	BINDER	742-5-11-0187-00-36	
X41	FP INDIREKT.STECKERL.36P. PIN CONNECTOR 4-POLIG	FP 242.3600	BINDER	742-5-11-0178-00-36	
X42	FP INDIREKT.STECKERL.36P. PIN CONNECTOR 4-POLIG	FP 242.3600	BINDER	742-5-11-0178-00-36	
X43	FP INDIREKT.STECKERL.36P. PIN CONNECTOR 4-POLIG	FP 242.3600	BINDER	742-5-11-0178-00-36	
X44	FP INDIREKT.STECKERL.36P. PIN CONNECTOR 3-POLIG	FP 242.3600	BINDER	742-5-11-0178-00-36	
X45	FP INDIREKT.STECKERL.36P. PIN CONNECTOR 3-POLIG	FP 242.3600	BINDER	742-5-11-0178-00-36	
X51	FP INDIREKT.STECKERL.36P. PIN CONNECTOR 4-POLIG	FP 242.3600	BINDER	742-5-11-0178-00-36	
X61	FP INDIREKT.STECKERL.36P. PIN CONNECTOR 3-POLIG	FP 242.3600	BINDER	742-5-11-0178-00-36	
X62	FP INDIREKT.STECKERL.36P. PIN CONNECTOR 2-POLIG	FP 242.3600	BINDER	742-5-11-0178-00-36	
					- ENDE -

Kennz. Comp.No.	Benennung Designation	Sachnummer Stock No.	Hersteller Manufacturer	Bezeichnung Designation	enthalten in contained in
A1	BD MIXER 1 MIXER 1	848.9728			
C1	CC 3PF+-0,5PF50V1,5NPO CAPACITOR	093.3228	VITRAMON	VJ0504A3R0DFA	
C2	CC 3PF+-0,5PF50V1,5NPO CAPACITOR	093.3228	VITRAMON	VJ0504A3R0DFA	
C4	CC 3PF+-0,5PF50V1,5NPO CAPACITOR	093.3228	VITRAMON	VJ0504A3R0DFA	
C6	CC 3PF+-0,5PF50V1,5NPO CAPACITOR	093.3228	VITRAMON	VJ0504A3R0DFA	
C7	CC 56PF+-10%50V NPO CHIP CAPACITOR	093.2244	VITRAMON	VJ0504A560KFA	
C8	CC 56PF+-10%50V NPO CHIP CAPACITOR	093.2244	VITRAMON	VJ0504A560KFA	
C9	CC 100PF+-10%50V1NP0 CHIP CAPACITOR	093.2144	VITRAMON	VJ0504A101KFA	
C13	CX 100PF+-20%100VTK50 CHIP MIS CAPACITOR	093.4460	ALPHA IND	SC9103NMSTYLE -817	
C14	CX 100PF+-20%100VTK50 CHIP MIS CAPACITOR	093.4460	ALPHA IND	SC9103NMSTYLE -817	
C23	CX 100PF+-20%100VTK50 CHIP MIS CAPACITOR	093.4460	ALPHA IND	SC9103NMSTYLE -817	
C24	CX 100PF+-20%100VTK50 CHIP MIS CAPACITOR	093.4460	ALPHA IND	SC9103NMSTYLE -817	
C33	CX 100PF+-20%100VTK50 CHIP MIS CAPACITOR	093.4460	ALPHA IND	SC9103NMSTYLE -817	
C34	CX 100PF+-20%100VTK50 CHIP MIS CAPACITOR	093.4460	ALPHA IND	SC9103NMSTYLE -817	
C43	CX 100PF+-20%100VTK50 CHIP MIS CAPACITOR	093.4460	ALPHA IND	SC9103NMSTYLE -817	
C44	CX 100PF+-20%100VTK50 CHIP MIS CAPACITOR	093.4460	ALPHA IND	SC9103NMSTYLE -817	
C53	CX 100PF+-20%100VTK50 CHIP MIS CAPACITOR	093.4460	ALPHA IND	SC9103NMSTYLE -817	
C54	CX 100PF+-20%100VTK50 CHIP MIS CAPACITOR	093.4460	ALPHA IND	SC9103NMSTYLE -817	
C63	CX 100PF+-20%100VTK50 CHIP MIS CAPACITOR	093.4460	ALPHA IND	SC9103NMSTYLE -817	
C64	CX 100PF+-20%100VTK50 CHIP MIS CAPACITOR	093.4460	ALPHA IND	SC9103NMSTYLE -817	
C81	CC 3PF+-0,5PF50V1,5NPO CAPACITOR	093.3228	VITRAMON	VJ0504A3R0DFA	
L11	LL DRAHTBUEGEL	849.2204			
N1	BX TGA8300DCC BB.AMPL BROAD-BAND AMPLIFIER CHIP	849.3046	TEXAS	TGA8300SCC	
N2	BX TGA8300DCC BB.AMPL BROAD-BAND AMPLIFIER CHIP	849.3046	TEXAS	TGA8300SCC	
N3	BX TGA8300DCC BB.AMPL BROAD-BAND AMPLIFIER CHIP	849.3046	TEXAS	TGA8300SCC	
N4	BX TGA8622SCC BB.AMPL BROAD-BAND AMPLIFIER CHIP	849.3030	TEXAS	N R+S ZCHNG 849.3030	
N5	BX TGA8300DCC BB.AMPL BROAD-BAND AMPLIFIER CHIP	849.3046	TEXAS	TGA8300SCC	
N6	BX TGA8300DCC BB.AMPL BROAD-BAND AMPLIFIER CHIP	849.3046	TEXAS	TGA8300SCC	
R1	RG 0,1W 1000HM+-2% CHIP CHIP RESISTOR	849.3098	MSI	WA47-PG-101-G-S	
R2	RG 0,1W 2000HM+-2% CHIP SMD-RESISTOR	849.3100	MSI	WA47-PG-201-G-S	
R3	RG 0,05W220 OHM+-1% 0805# RESISTOR	007.9049	ROHRER	RN73E2X 220 OHM-F-1%	
R4	RG 0,05W 22 OHM+-1% 0805# RESISTOR	007.8920	ROHRER	RN73C3X 22 OHM-F-1%	
R5	RG 0,05W220 OHM+-1% 0805# RESISTOR	007.9049	ROHRER	RN73E2X 220 OHM-F-1%	
R7	RG 0,05W330 OHM+-1% 0805# RESISTOR	007.9061	ROHRER	RN73E2X 330 OHM-F-1%	
R8	RG 0,05W 18 OHM+-1% 0805# RESISTOR	007.8913	ROHRER	RN73C2X 18 OHM-F-1%	
R9	RG 0,05W330 OHM+-1% 0805# RESISTOR	007.9061	ROHRER	RN73E2X 330 OHM-F-1%	
R14	RG 0,05W 10 OHM+-1% 0805# RESISTOR	007.8888	ROHRER	RN73C2X10 OHM-F-1%	

Für diese Unterlage behalten wir uns alle Rechte vor

Kennz. Comp.No.	Benennung Designation	Sachnummer Stock No.	Hersteller Manufacturer	Bezeichnung Designation	anthalten in contained in
R15	RG 0,05W 22 OHM+-1% 0805# RESISTOR	007.8920	ROHRER	RN73C3X 22 OHM-F-1%	
R17	RG 0,05W 22 OHM+-1% 0805# RESISTOR	007.8920	ROHRER	RN73C3X 22 OHM-F-1%	
R24	RG 0,05W 10 OHM+-1% 0805# RESISTOR	007.8888	ROHRER	RN73C2X10 OHM-F-1%	
R25	RG 0,05W 22 OHM+-1% 0805# RESISTOR	007.8920	ROHRER	RN73C3X 22 OHM-F-1%	
R27	RG 0,05W 22 OHM+-1% 0805# RESISTOR	007.8920	ROHRER	RN73C3X 22 OHM-F-1%	
R34	RG 0,05W 10 OHM+-1% 0805# RESISTOR	007.8888	ROHRER	RN73C2X10 OHM-F-1%	
R35	RG 0,05W 22 OHM+-1% 0805# RESISTOR	007.8920	ROHRER	RN73C3X 22 OHM-F-1%	
R37	RG 0,05W 22 OHM+-1% 0805# RESISTOR	007.8920	ROHRER	RN73C3X 22 OHM-F-1%	
R41	RG 10 KOHM+-1%TK100 1206 CHIP RESISTOR	RG 007.0793	DALE	CRCW1206-10 10K F-T	
R42	RG 30,1KOHM+-1%TK100 1206 RESISTOR CHIP	RG 007.5908	DALE	CRCW1206-10 30K1 F-M	
R43	RG 0,1W 1000HM+-2% CHIP CHIP RESISTOR	849.3098	MSI	WA47-PG-101-G-S	
R44	RG 0,1W 2000HM+-2% CHIP SMD-RESISTOR	849.3100	MSI	WA47-PG-201-G-S	
R45	RG 0,05W150 OHM+-1% 0805# RESISTOR	007.9026	ROHRER	RN73E2X 150 OHM-F-1%	
R46	RG 0,05W 39 OHM+-1% 0805# RESISTOR	007.8959	ROHRER	RN73C2X 39 OHM-F-1%	
R47	RG 0,05W150 OHM+-1% 0805# RESISTOR	007.9026	ROHRER	RN73E2X 150 OHM-F-1%	
R54	RG 0,05W 10 OHM+-1% 0805# RESISTOR	007.8888	ROHRER	RN73C2X10 OHM-F-1%	
R55	RG 0,05W 22 OHM+-1% 0805# RESISTOR	007.8920	ROHRER	RN73C3X 22 OHM-F-1%	
R57	RG 0,05W 22 OHM+-1% 0805# RESISTOR	007.8920	ROHRER	RN73C3X 22 OHM-F-1%	
R64	RG 0,05W 10 OHM+-1% 0805# RESISTOR	007.8888	ROHRER	RN73C2X10 OHM-F-1%	
R65	RG 0,05W 22 OHM+-1% 0805# RESISTOR	007.8920	ROHRER	RN73C3X 22 OHM-F-1%	
R67	RG 0,05W 22 OHM+-1% 0805# RESISTOR	007.8920	ROHRER	RN73C3X 22 OHM-F-1%	
R71	RG 0,05W 68 OHM+-1% 0805# RESISTOR	007.8988	ROHRER	RN73C2X 68 OHM-F-1%	
R72	RG 0,05W150 OHM+-1% 0805# RESISTOR	007.9026	ROHRER	RN73E2X 150 OHM-F-1%	
R73	RG 0,05W 68 OHM+-1% 0805# RESISTOR	007.8988	ROHRER	RN73C2X 68 OHM-F-1%	
R75	RG 1000 OHM+-1%TK100 1206 CHIP RESISTOR	RG 006.7271	DALE	CRCW1206-10 1K F-T	
R81	RG 0,05W100 OHM+-1% 0805# RESISTOR	007.9003	ROHRER	RN73C2X 100 OHM-F-1%	
R82	RG 0,05W100 OHM+-1% 0805# RESISTOR	007.9003	ROHRER	RN73C2X 100 OHM-F-1%	
V1	AX BAT14-110R SCHKY BEAM SCHOTTKYDIODE BEAM	921.4190	SIEMENS	BAT14-110R	848.9728
V71	AX 5082-0018 STRECDI CHIP DIODE CHIP	849.3000	HP	5082-0018	
W2	DX RF-CABLE	849.3175			
X6	FJ EINBAUBUCHSE SYST.SMA PANEL SOCKET	FJ 911.0105	SUHNER	23SMA-50-032	
X7	DX SMA-BU MIT KABEL	849.3152			
X11	FJ EINBAUBUCHSE SYST.SMA PANEL SOCKET	FJ 911.0105	SUHNER	23SMA-50-032	
Z1 ..12	LD PI-FILTER 60DB/10GHZ # PI-FILTER	849.3023	TUSONIX	4205-001	
					- ENDE -

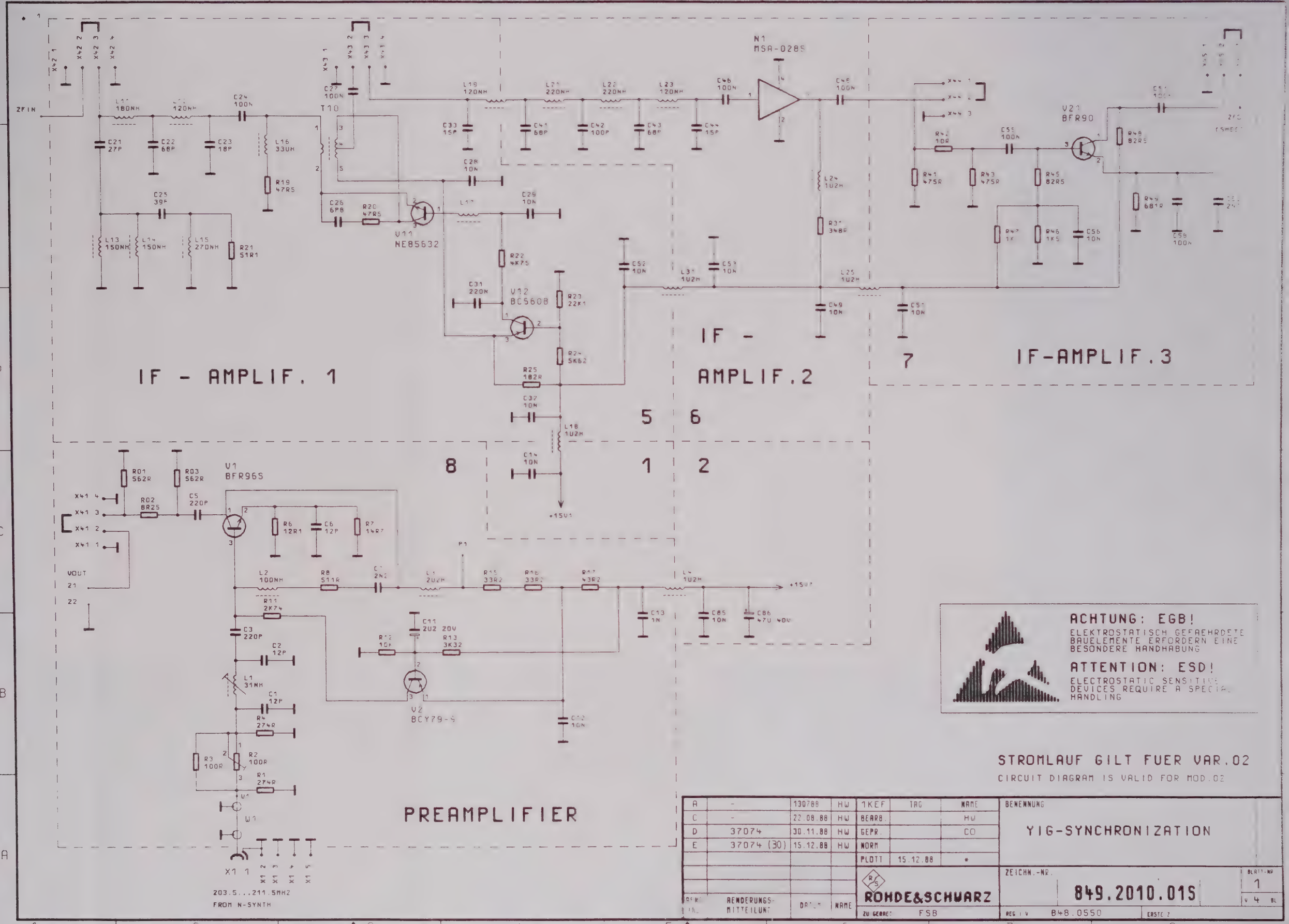

IF - AMPLIF. 1
IF - AMPLIF.2
IF-AMPLIF.3
PREAMPLIFIER
N1 MSA-028S
V11 NE85632
V12 BC560B
V21 BFR90
V1 BFR96S
V2 BCY79-9
T10
ZFIN
VOUT
203.5...211.5MHZ FROM N-SYNTH
ACHTUNG: EGB!
ELEKTROSTATISCH GEFAEHRDETE BAUELEMENTE ERFORDERN EINE BESONDERE HANDHABUNG
ATTENTION: ESD!
ELECTROSTATIC SENSITIVE DEVICES REQUIRE A SPECIAL HANDLING
STROMLAUF GILT FUER VAR.02
CIRCUIT DIAGRAM IS VALID FOR MOD.02
A - 130788 HW
C - 22.08.88 HW
D 37074 30.11.88 HW
E 37074 (30) 15.12.88 HW
1KEF TAG NAME
BEARB. HW
GEPR. CO
NORM
PLOTT 15.12.88 *
BENENNUNG
YIG-SYNCHRONIZATION
ROHDE&SCHWARZ
ZEICHN.-NR. 849.2010.01S
BLATT-NR 1
ZU GEHRET FSB
REG I V 848.0550
ERSTE Z
AENDERUNGS-MITTEILUNG
DATUM NAME

Σ-SYNTH.
10...20 MHZ

X2 1

FREQU.- PHASE DETECTOR

INTEGRATOR

SYNC. DETECTOR

D11-C MC10102
D11-B MC10102
D13-A MC10102
D12-A MC10131
D13-B MC10102
D14-A MC10131
D14-B
D14-C
D12-B
D12-C
D13-C
D13-D

R125 511R
R126 511R
R127 511R
R128 511R
R129 511R
R130 511R
R131 511R
R132 200R
R133 200R
R134 511R
R135 511R
R136 511R
R139 10K
R142 10K
R145 301R
R146 16R2
R147 82R5
R148 100R
R149 200R
R151 511R

C130 10N
C131 10N
C132 10N
C133 10N
C134 10N
C137 47N
C138 10N

L52 10UH
L53 10UH

C95 270P
C96 270P

V32-B MAT01AH
V32-A MAT01AH

R85 3K32
R86 3K32
R87 3K32
R88 10K
R89 10K
R91 10K
R92 10K
R96 20K
C98
C99 3N3
C101 10N
C102 10N
C104 330P
C105 10P
C106 330P
C107 470N
R101 301R
R102 22R1

N13 SE5534AFE

M31
RT SU

R78 1M
V34 1N4448
R80 1K
R81 3K57
R82
R83
R84 1K
R94 1K
C109 10N
R95 20K

N12-A LM339
N12-B LM339
N12-C LM339
N12-D LM339
N11-B MC1558

M1 HLMP1700
R106 332R
R108 150R
R109 10K
R110 2K21
R112 1K5
R113 18K2

C111 10N
C112 10N
L41 1U2H
L42 1U2H
C78 470 40V
C77 10N
C116 10N
C79 10N
C118 10N
C119 10N
C120 10N
C121 10N
C122 10N
R63 1K
R64 1K
R65 1K
R66 1K
R67 1K

D2-A 74HC74
D2-B 74HC74
D2-C 74HC74
R160 10R
C125 10N
R161 1K
R162 1K

(SHEET4)
(SHEET4) LELYSY

+15V6
-15V3
+5V
-15V
+15V7
-15V4
+5V1

X21A 29 YFHI
X21A 26 SYGAIN
X21A 16 STLYSY
X21A 17 STFYSY
X21A 32 GNDD
X21C 32
X21A 31 +5V
X21C 31
X21C 19 LELYSY
X21A 21 INTRES
X21C 20 LEFYSY

STROMLAUF GILT FUER VAR.02
CIRCUIT DIAGRAM IS VALID FOR MOD.02

IND.	ÄNDERUNGS-MITTEILUNG	DATUM	NAME
A	-	13.07.88	HW
C	-	22.08.88	HW
D	37074	30.11.88	HW
E	37074 (30)	15.12.88	HW

ERST.	TAG	NAME
BEARB		HW
GEPR.		CO
NORM		
PLOTT	20.12.88	*

ROHDE&SCHWARZ
ZU GEHÖRT FSB

BENENNUNG: YIG-SYNCHRONIZATION

ZEICHN.-NR 849.2010.01S
BLATT NR 2 V 4 BL
REG.-V 848 0550 ERSTE Z

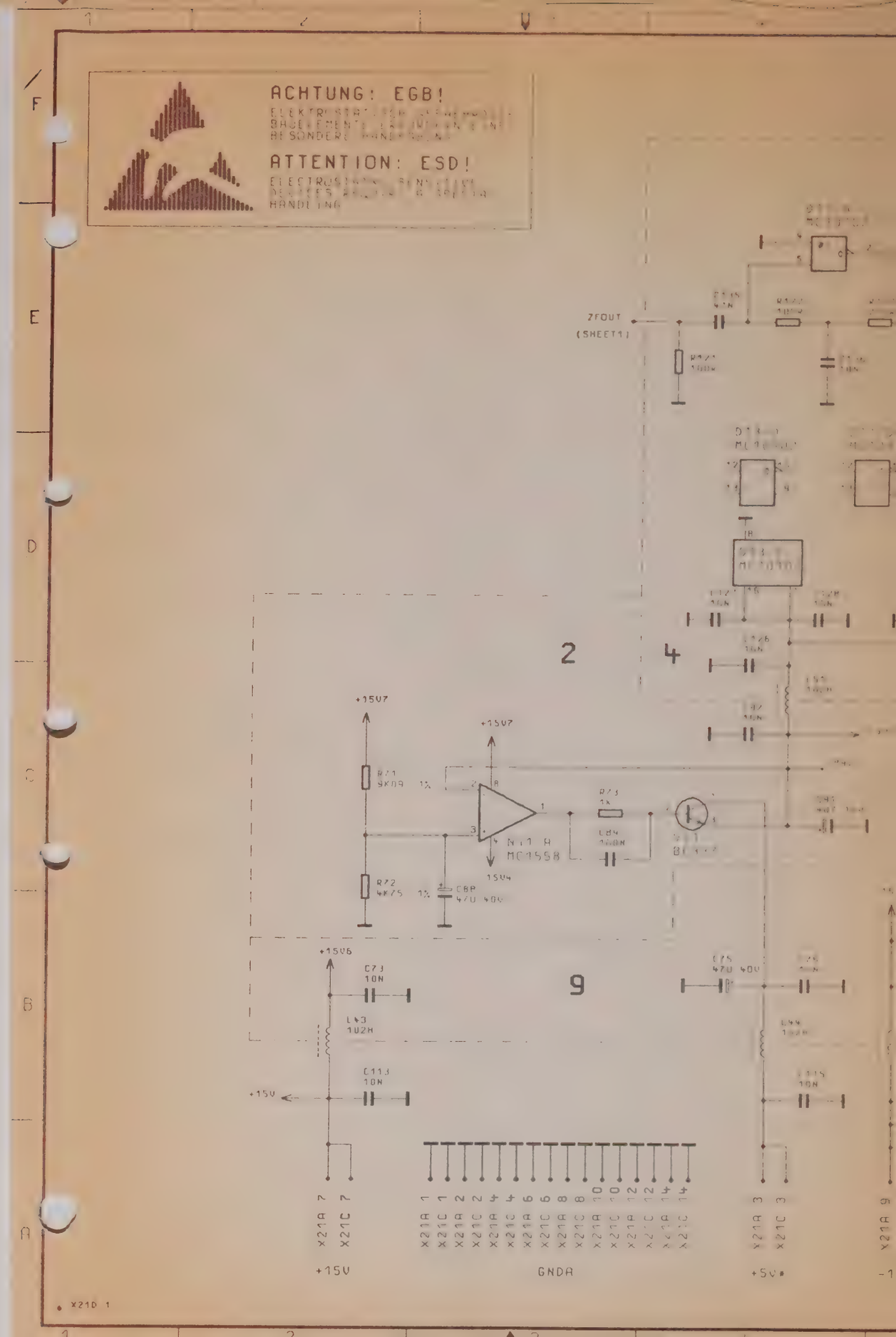
ACHTUNG: EGB!
ATTENTION: ESD!
ZFOUT
(SHEET1)
2
4
9
+15V7
R71
9K09
R72
4K75
C88
470 40V
N11 A
MC1558
R73
1K
C84
100N
+15V6
C73
10N
L43
102H
C113
10N
+15V
C75
470 40V
X21A 7
X21C 7
X21A 1
X21C 1
X21A 2
X21C 2
X21A 4
X21C 4
X21A 6
X21C 6
X21A 8
X21C 8
X21A 10
X21C 10
X21A 12
X21C 12
X21A 14
X21C 14
X21A 3
X21C 3
X21A 9
+15V
GNDA
+5V*
X21D 1

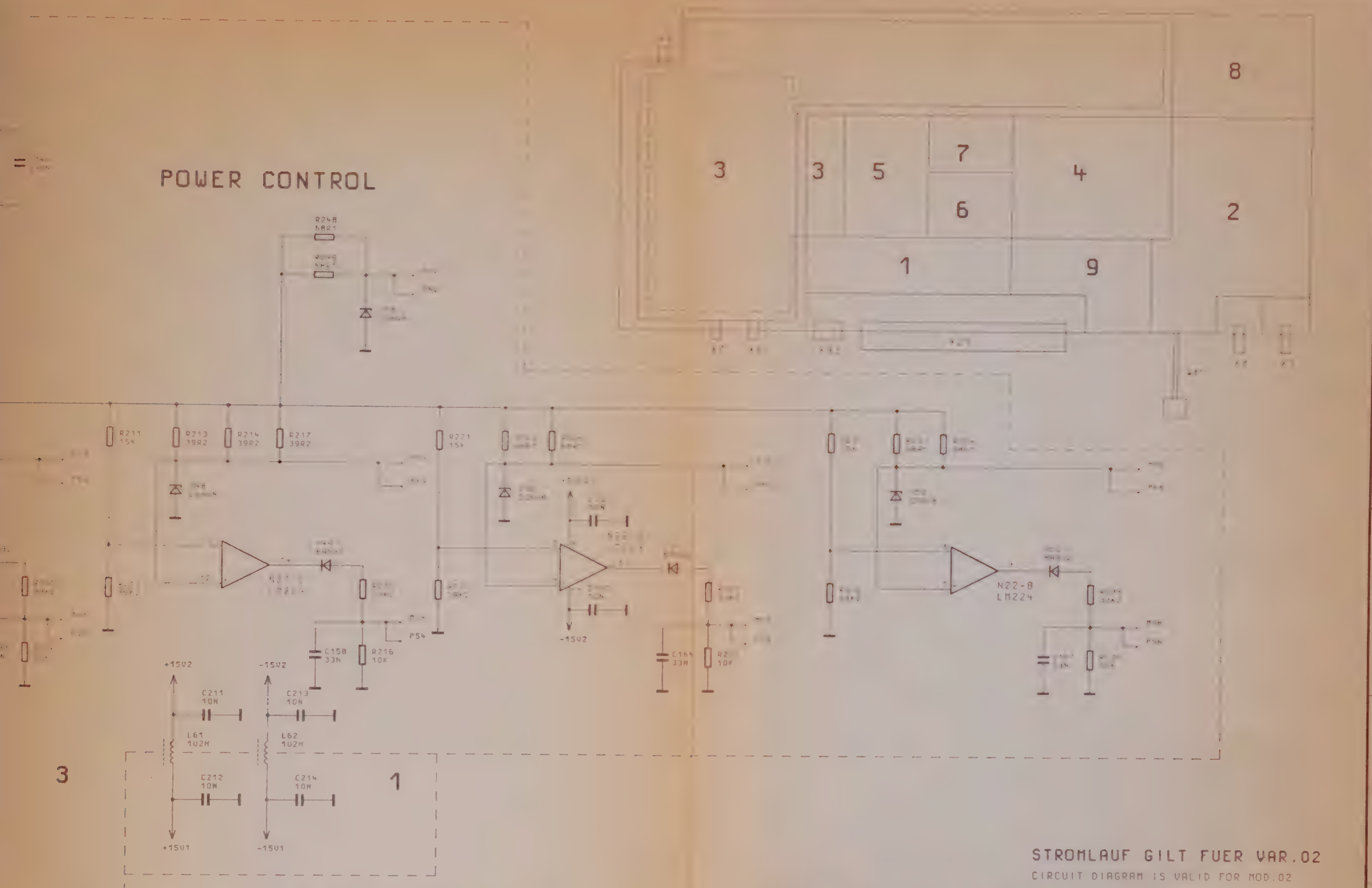

STROMLAUF GILT FUER VAR.02
CIRCUIT DIAGRAM IS VALID FOR MOD.02

ACHTUNG: EGB!
ELEKTROSTATISCH GEFAEHRDETE BAUELEMENTE ERFORDERN EINE BESONDERE HANDHABUNG.

ATTENTION: ESD!
ELECTROSTATIC SENSITIVE DEVICES REQUIRE A SPECIAL HANDLING.

AEND NR	AENDERUNGS-MITTEILUNG	DATUM	NAME
C	-	22.08.88	HW
D	37074	30.11.88	HW
E	37074 (30)	15.12.88	HW

BEARB.		HW
GEPR.		CO
NORM		

ROHDE&SCHWARZ

YIG-SYNCHRONIZATION

849.2010.01S

3
4

ZEICHN.-NR

FUER DIESE UNTERLAGE
BEHALTEN WIR UNS ALLE RECHTE

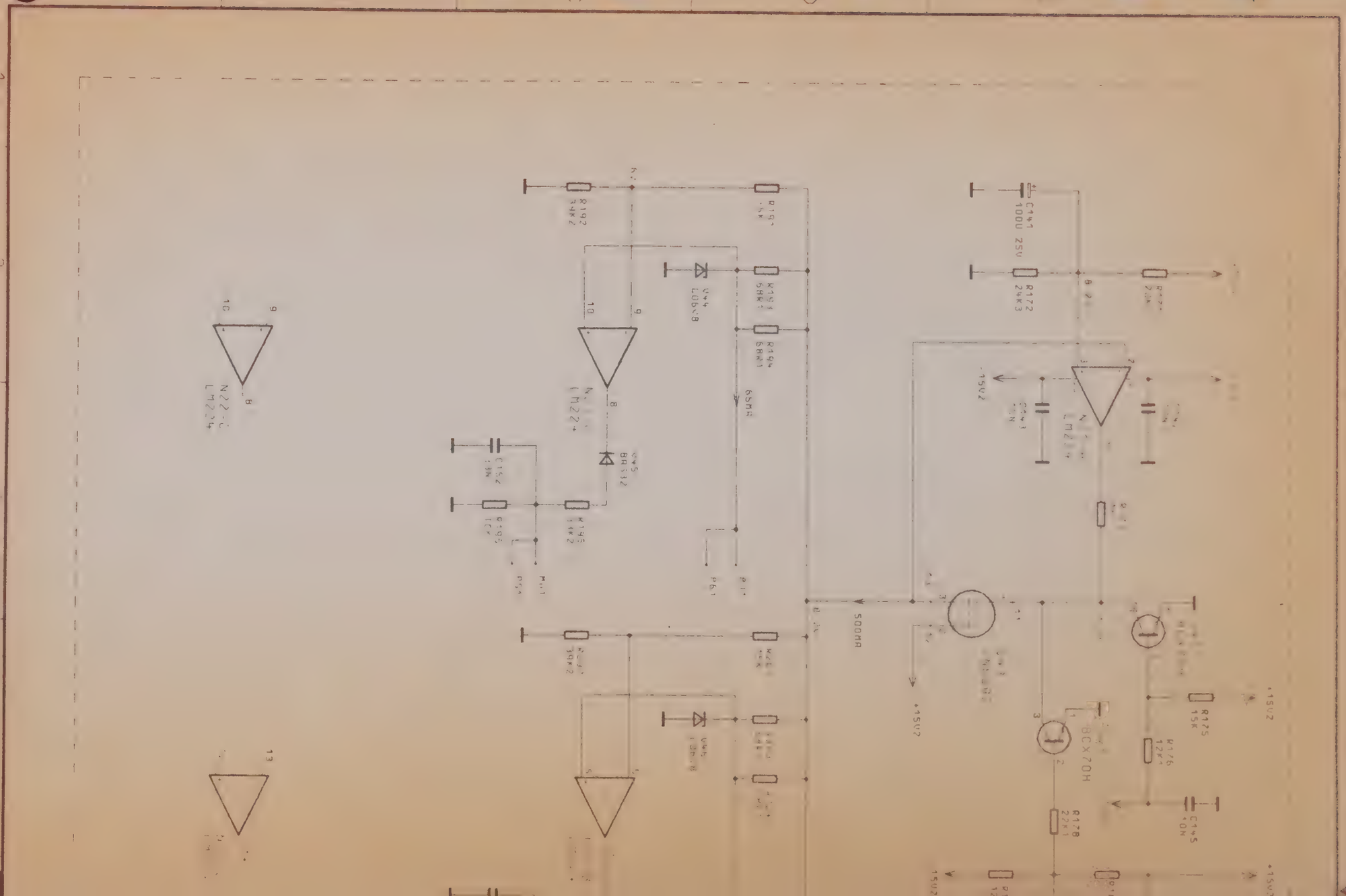

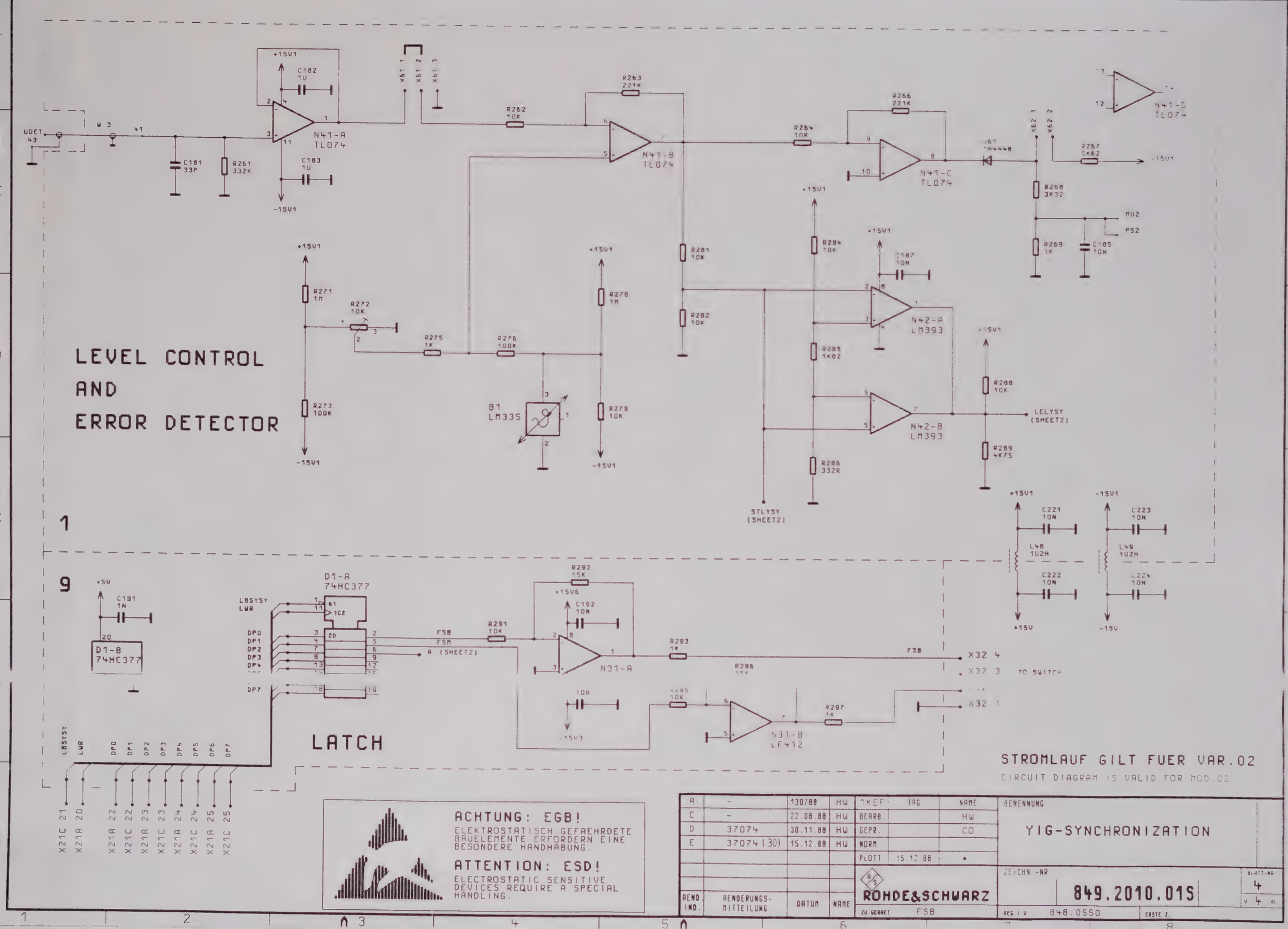
LEVEL CONTROL
AND
ERROR DETECTOR
LATCH
N41-A
TL074
N41-B
TL074
N41-C
TL074
N41-D
TL074
N42-A
LM393
N42-B
LM393
B1
LM335
D1-A
74HC377
D1-B
74HC377
N31-A
N31-B
LF412
UDET
43
LELYSY
(SHEET2)
STLYSY
(SHEET2)
TO SWITCH
X32 4
X32 3
X32 1
X21C 21
X21A 20
X21A 22
X21C 22
X21A 23
X21C 23
X21A 24
X21C 24
X21A 25
X21C 25
STROMLAUF GILT FUER VAR.02
CIRCUIT DIAGRAM IS VALID FOR MOD.02
ACHTUNG: EGB!
ELEKTROSTATISCH GEFAEHRDETE BAUELEMENTE ERFORDERN EINE BESONDERE HANDHABUNG.
ATTENTION: ESD!
ELECTROSTATIC SENSITIVE DEVICES REQUIRE A SPECIAL HANDLING.
A - 130788 HW
C - 22.08.88 HW
D 37074 30.11.88 HW
E 37074 (30) 15.12.88 HW
AEND. IND.
AENDERUNGS-MITTEILUNG
DATUM
NAME
TAG
NAME
BEARB. HW
GEPR. CO
NORM
PLOTT 15.12.88
ROHDE&SCHWARZ
ZU GERAET FSB
BENENNUNG
YIG-SYNCHRONIZATION
ZEICHN.-NR
849.2010.01S
BLATT-NR
4
REG I V 848.0550
ERSTE Z.

Für diese Unterlage behalten
alle Rechte vor.

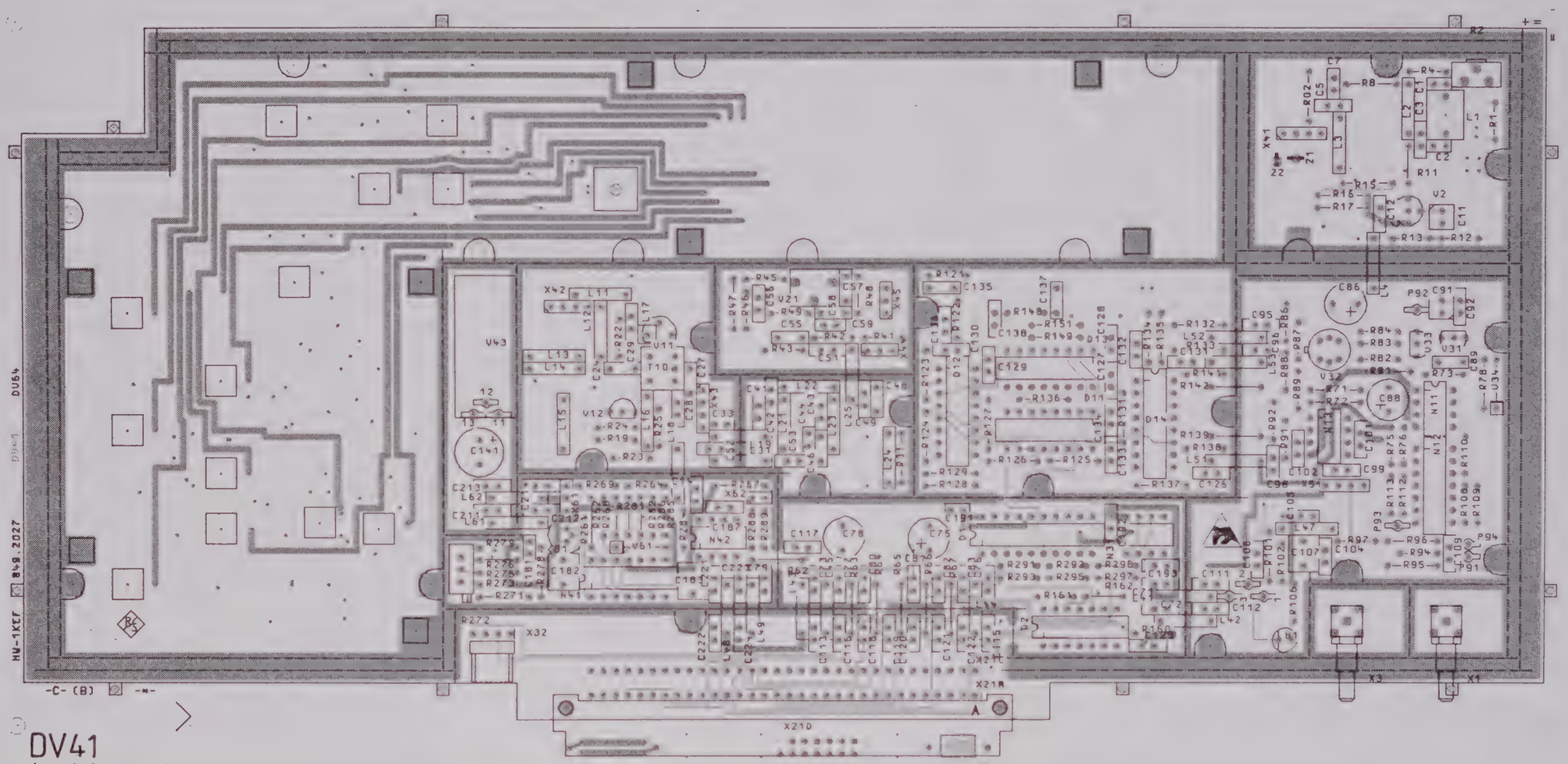

DV41

Ansicht und Leitungsführung Bauteilseite

View of tracks on component side

C	37 074 (30)	12.88	HW	Maße ohne Toleranzangabe		Maßstab 1 : 1
						Halbzeug, Werkstoff
				1KEF	Tag	Name
				Bearb	12.88	HW
				Gepr		
				Norm		
And Zust	Anderungs-Mitteilung	Tag	Name	ROHDE & SCHWARZ		Benennung: YIG-SYNCHRONIZATION
				zu Gerat FSB		Zeichn-Nr 849.2010.01 EE
				reg. i V 848.0550V		erste Z

Blatt-Nr. 3 v BI

(hierzu HVC 250)

ACHTUNG: EGB! Elektrostatisch gefährdete Bauelemente erfordern eine besondere Handhabung.

ATTENTION ESD! Electrostatic sensitive devices require a special handling.

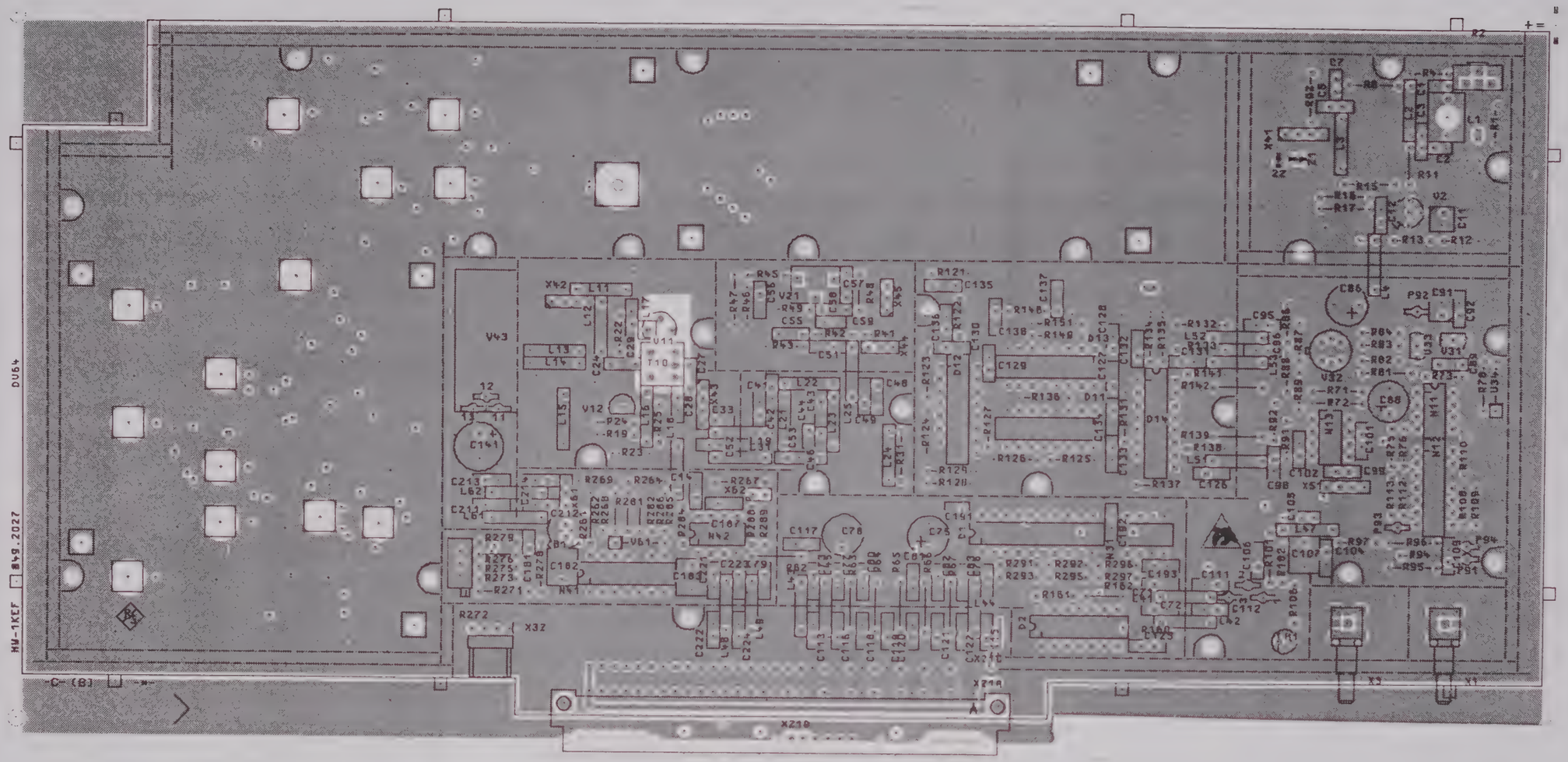

DV43

Ansicht und Leitungsführung Bauteilseite

View of tracks on component side

(hierzu HVC 250)

ACHTUNG: EGB!
Elektrostatisch gefährdete Bauelemente erfordern eine besondere Handhabung

ATTENTION ESD!
Electrostatic sensitive devices require a special handling

C	37 074 (30)	12.88	HW
And. Zust	Anderungs-Mitteilung	Tag	Name

Maße ohne Toleranzangabe

1KEF	Tag	Name
Bearb	12.88	HW
Gepr		
Norm		

ROHDE&SCHWARZ

zu Gerat FSB

Maßstab 1 : 1

Halbzeug, Werkstoff

Benennung: YIG-SYNCHRONIZATION — Z

Zeichn.-Nr: 849.2010.01 EE — Blatt-Nr 4 — v Bl

reg. i. V 848.0550V — erste Z

Für diese Unterlage behalten wir uns alle Rechte vor.

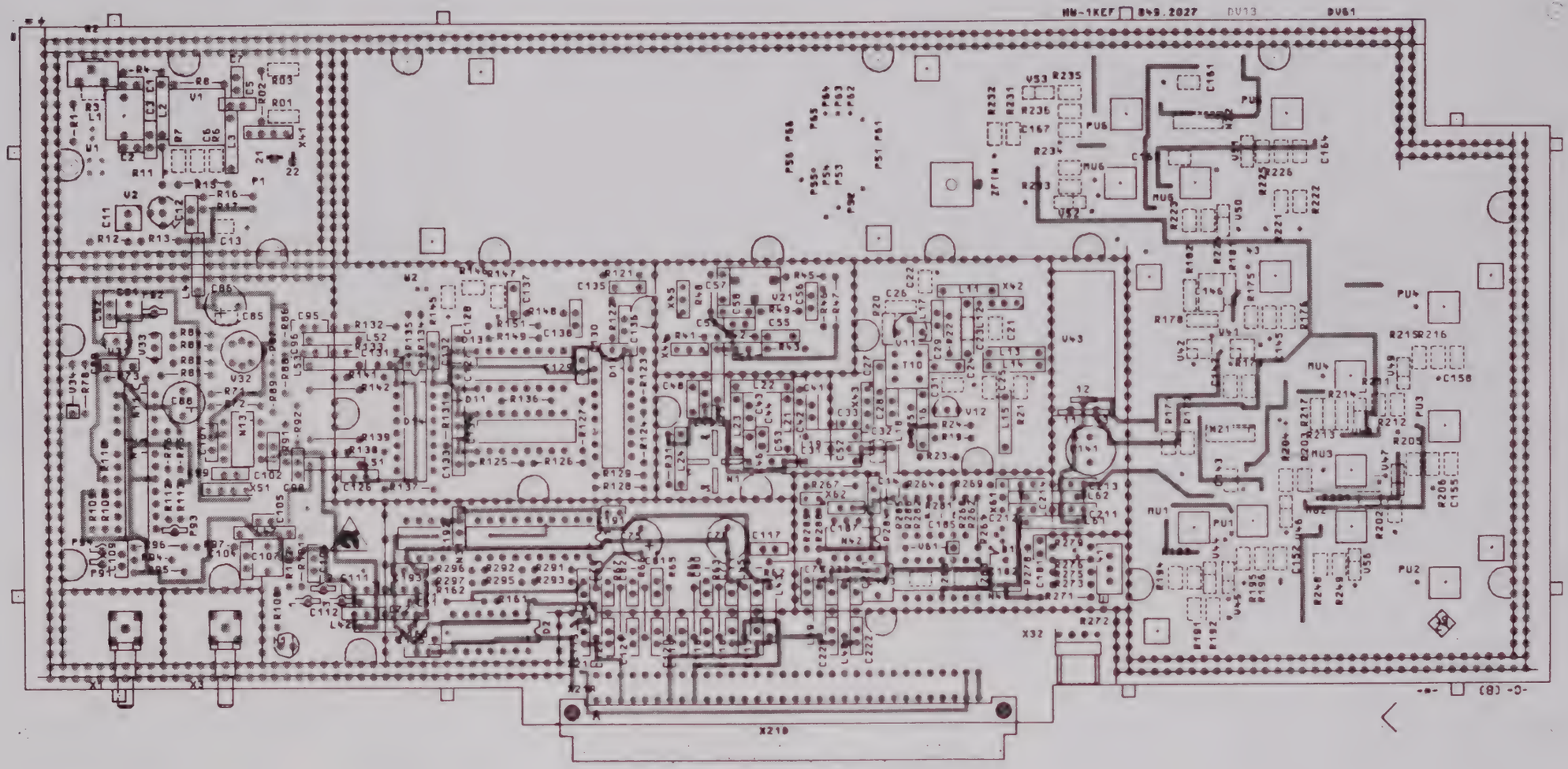

DV13

Ansicht und Leitungsführung Lötseite

View of tracks on solder side

Für die Überlassung dieser Unterlage behalten wir uns alle Rechte vor

0-Projektion
ethode E

ACHTUNG. EGB!
Elektrostatisch gefährdete Bauelemente erfordern eine besondere Handhabung.

ATTENTION ESD!
Electrostatic sensitive devices require a special handling

(hierzu HVC 250)

C	37 074 (30)	12.88	HW	Maße ohne Toleranzangabe		Maßstab 1 : 1	
						Halbzeug, Werkstoff	
				1KEF	Tag	Name	Benennung: YIG-SYNCHRONIZATION — Z
				Bearb	12.88	HW	
				Gepr			
				Norm			
And	Anderungs-Mitteilung	Tag	Name	ROHDE&SCHWARZ		Zeichn.-Nr 849.2010.01 EE	Blatt-Nr 5
				zu Gerat FSB		reg i V 848.0550V erste Z	v Bl

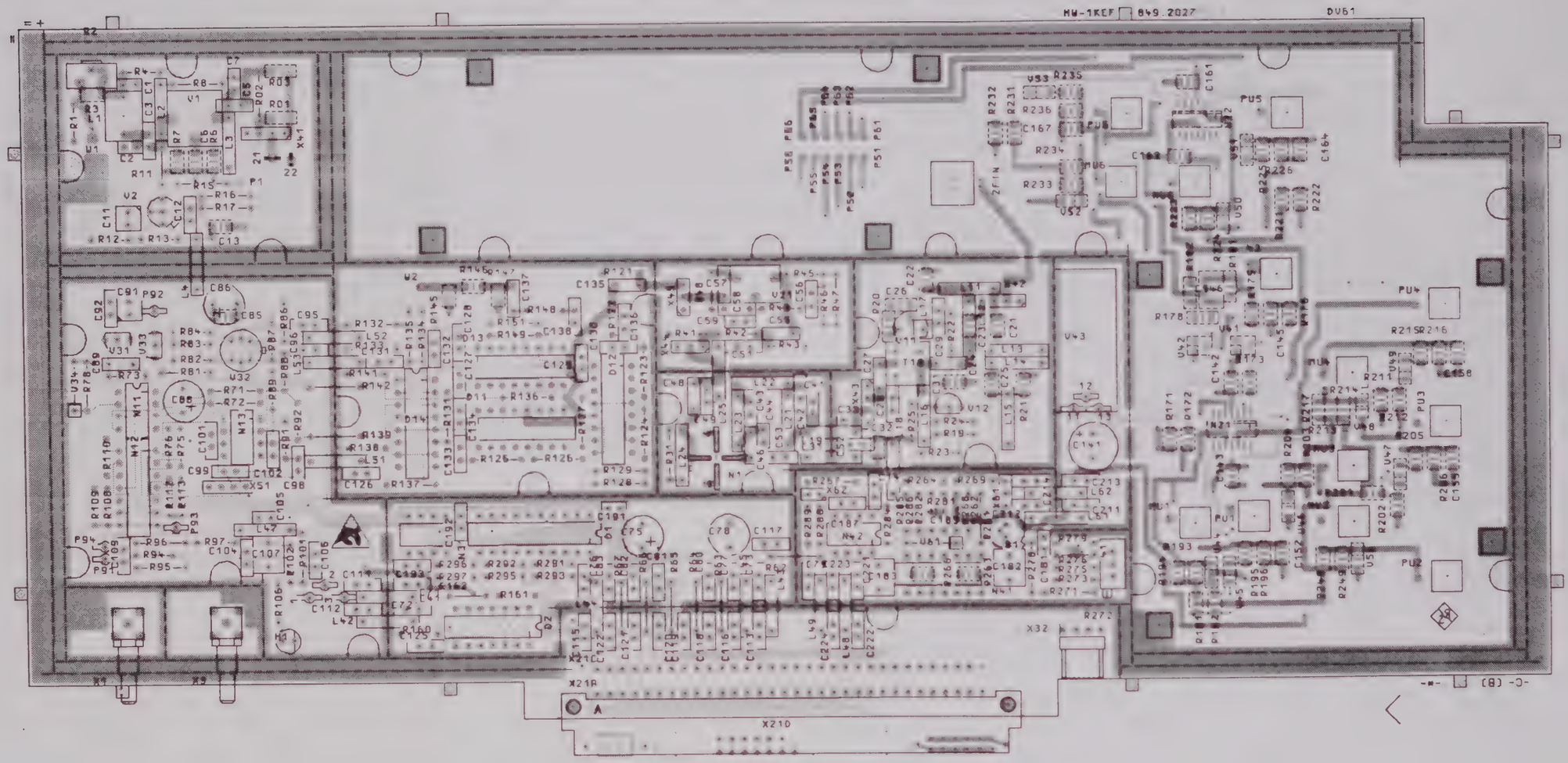

DV11

Ansicht und Leitungsfuhrung Lotseite

View of tracks on solder side

ACHTUNG EGB!
Elektrostatisch gefahrdete Bauelemente erfordern eine besondere Handhabung

ATTENTION ESD!
Electrostatic sensitive devices require a special handling

C 37 074 (30) 12.88 HW	Maße ohne Toleranzangabe	Maßstab 1 : 1	
		Halbzeug Werkstoff	
	1KEF 12.88 HW	Benennung YIG-SYNCHRONIZATION	Z
	ROHDE&SCHWARZ	Zeichn.-Nr. 849.2010.01 EE	Blatt-Nr. 6
Änderung Mitteilung	FSB	reg. V 848.0550V	erste Z

Für diese Unterlage behalten wir uns alle Rechte vor

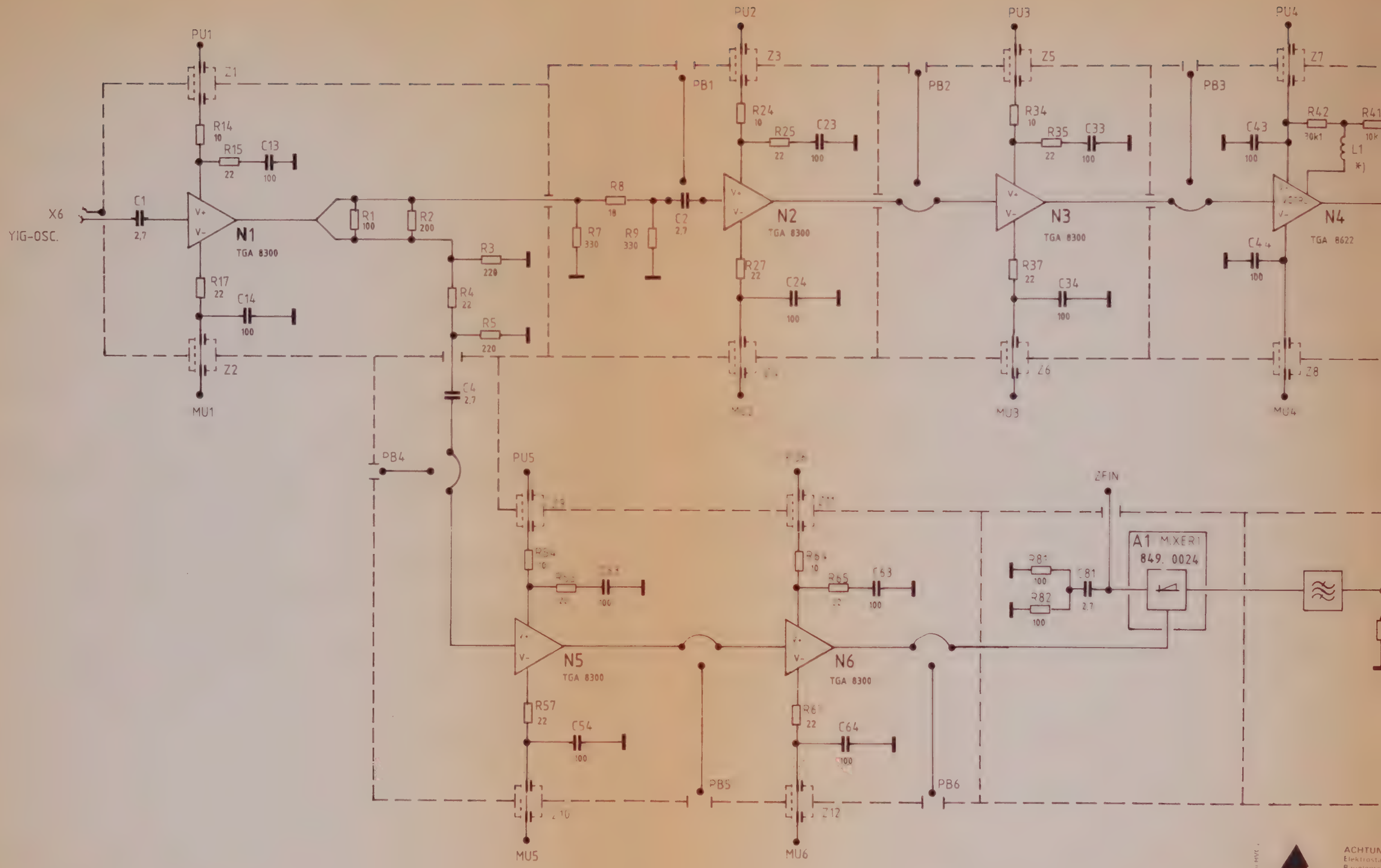

ROHDE&SCHWARZ	A	37 074 (30)	12.88	HW	D	37 086 (41)	03.90	HW	KEF	Tag	Name
	B	37 086 (10)	06.89	HW					Bearb	10.88	HW
	C	37 086 (32)	01.90	HW					Gepr		
	And Zust	Änderungs-Mitteilung	Datum	Name	And Zust	Änderungs-Mitteilung	Datum	Name	Norm		

Zeichn.-Nr.

PE 095/109 0781

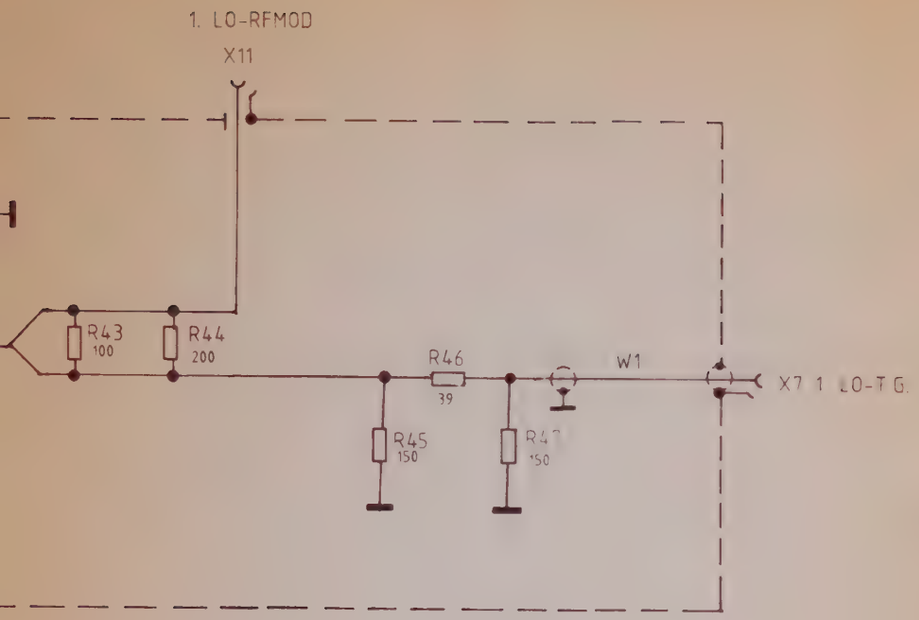

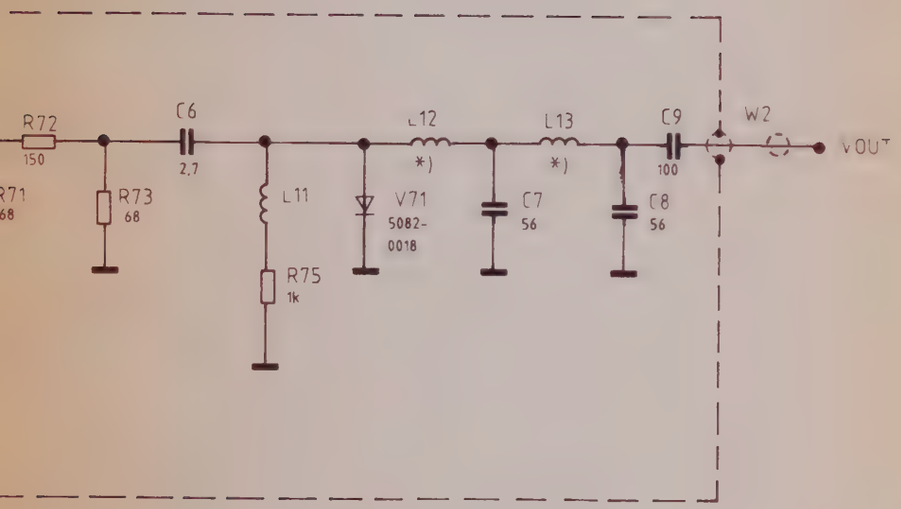

*) im Layout enthalten

EGB:
h gefährdete
erfordern eine
ndhabung
ESD:
ensitive
e d Special

VAR 02 = Grundausführung

Benennung	Zeichn.-Nr	
ED RF-UNIT	849. 2104. 01 S	v 1 Bl
zu Gerat FSB	reg i V. 849. 0550 V	erste Z 849. 2010

ROHDE&SCHWARZ

SERVICE DOCUMENTATION

YIG Pretune + YIG Oscillator

848.6506.02

Contents

		Page
6	Service Instructions "YIG Pretune + YIG Oscillator"	6.1
6.1	Function Description	6.1
6.1.1	YIG Oscillator	6.1
6.1.2	Microprocessor Interface	6.2
6.1.3	Sawtooth Generation (SWEEP)	6.2
6.1.4	Span Setting (Span)	6.2
6.1.5	Start Frequency Setting	6.3
6.1.6	Tuning Coil Driver	6.3
6.1.7	FM Control Unit	6.3
6.1.8	FM Coil Driver	6.5
6.1.9	Control Voltage Limiter	6.5
6.1.10	External Tuning Voltages	6.5
6.2	Testing and Adjustment	6.7
6.2.1	Adjusting the -5-V Bias	6.8
6.2.2	Adjusting the Minimum Frequency	6.8
6.2.3	Adjusting the Maximum Start Frequency	6.8
6.2.4	Adjusting the Maximum Span	6.9
6.2.5	Adjusting the FM Gain	6.9
6.2.6	Adjusting the Start/Stop Synchronization Limit	6.9
6.2.7	Adjusting the Synchronized Sweep Limit	6.9
6.2.8	Testing the PSAWT Offset	6.10
6.2.9	Adjusting the PSAWT SF Gain	6.10
6.2.10	Adjusting the PSAWT SP Gain	6.10
6.2.11	Adjusting the SAWT Amplitude	6.10
6.2.12	Adjusting Start Frequency Sample and Hold Offset	6.10
6.2.13	Adjusting Stop Frequency Sample and Hold Offset	6.10
6.2.14	Adjusting Tuning Compensation and FM Compensation	6.11
6.2.15	Testing the Sawtooth Generator	6.12
6.2.16	Testing the Sweep Output	6.13
6.2.17	Testing the FRQ STP Output	6.13
6.2.18	Testing the Sweep Filter	6.13
6.2.19	Testing the Fine Tuning of the Start Frequency	6.14
6.2.20	Testing the Fine Tuning of the Span	6.14
6.2.21	Testing Tuning Filter and Main Coil Filter	6.15
6.2.22	Testing the Start/Stop Synchronization	6.16
6.2.22.1	Start Frequency Sample and Hold	6.16
6.2.22.2	Multiplier	6.17
6.2.22.3	Stop Frequency Sample and Hold	6.18
6.2.23	Testing the FM Summing Amplifier	6.19
6.2.24	Testing the FM Coil Driver	6.19
6.2.25	Testing the PSAWT Voltage with FM Sweep	6.19

Page

6.3 **Troubleshooting** 6.20

6.3.1 YIG Oscillator Outputs no RF Signal 6.20
6.3.2 Start Frequency Incorrect 6.21
6.3.3 No Sweep with Spans >5 MHz 6.22
6.3.4 Stop Frequency Incorrect 6.23
6.3.5 Signal Timing with Start/Stop Synchronization 6.24

Parts lists
Circuit diagrams
Component location plans

6 Service Instructions "YIG Pretune + YIG Oscillator"

(See circuit diagram 848.6506 S)

6.1 Function Description

(See block diagram 6-1)

The module is used for processor-controlled tuning of a YIG oscillator. The frequency of the oscillator depends on the current flowing through the two coils TUNE and FM.

The YIG oscillator is to be tuned linearly between a start frequency and a stop frequency. The start frequency corresponds to the sum of a constant current (fundamental frequency = minimum start frequency) and two currents which can be set via D/A converters (start course, start fine). The oscillator is tuned by means of a sawtooth voltage (SWEEP) generated using a counter and a D/A converter. The attenuation to the desired span is performed by two D/A converters (span course, span fine). The tuning currents for start frequency and span are added and, being amplified, fed to the main coil (TUNE) of the YIG oscillator.

For exact setting of start and stop frequency, the YIG oscillator is operated in an external PLL. The control voltage (YIG SYN) is fed via a switchable span limiter to switches S3 (synchronization of start frequency), and S2 (synchronization of stop frequency) further to an adder and via S4 to the current amplifier for the coil (FM) of the YIG oscillator.

When the PLL has locked, the control voltage is stored in a sample and hold circuit. When tuning the free-running YIG oscillator subsequently, the start and stop frequency are thus corrected to obtain the nominal value after switching over S2 and S3. While tuning the oscillator, the correction voltage for the stop frequency must increase linearly, starting at zero, which is enabled by a multiplier connected in series with the sample and hold.

With spans below 50 MHz, the FM coil is used for tuning (switch-selected with S1). With spans between 25 and 50 MHz, an offset corresponding to -25 MHz (FM offset, S5) is applied to the FM summing amplifier which causes the maximum tuning current to be halved (-25 MHz to + 25 MHz instead of 0 to 50 MHz).

With spans below 5 MHz, the oscillator is directly tuned by the control voltage (YIG SYN) with the PLL locked in (switch-selected with S4).

6.1.1 YIG Oscillator

The YIG oscillator provides an RF signal with a level of typ. + 15 dBm in the frequency range from 5421.4 to 10621.4 MHz.The frequency is tuned by a DC current flowing through the main coil (TUNE). The frequency can also be varied by approx. ± 35 MHz by a current flowing through the FM coil. The operating temperature of the YIG resonator is controlled by a built-in heater (HTR). The internal oscillator requires an operating voltage of + 15 V and -5 V.

6.1.2 Microprocessor Interface

The data DP0 to DP7 are applied via the bus receiver D11 to the write ports. The addresses are decoded in D12 as follows:

Address line				Addressed port	
AP4	AP3	AP2	AP1		
0	0	0	0	D31	Low Byte
0	0	0	1	D31	High Byte
0	0	1	0	D33	Low Byte
0	0	1	1	D33	High Byte
0	1	0	0	D19	
0	1	0	1	D34	
0	1	1	0	D52	
0	1	1	1	D16, D17	
1	0	0	0	D18	
1	0	0	1	D55	
1	0	1	0	D32	DAC A
1	0	1	1	D32	DAC B

Note: In D31 and D33, the Low byte must be written first and then the High byte; otherwise the Low byte will not be accepted.

Timing:

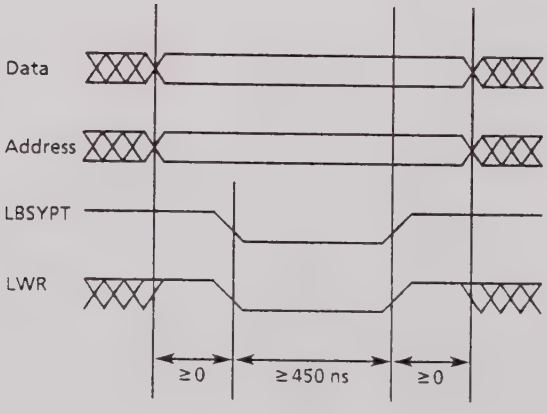

6.1.3 Sawtooth Generation (SWEEP)

The counter D16, D17, D18 and the D/A converter D21 generate a staircase sawtooth voltage. The counter can be set in parallel via the microprocessor interface. The clock SWPCLK is applied via D13-B, the monoflop D20-A and D14-C,D.

Deglitcher

The MOSFET V11-A short-circuits the current output of the D/A converter to ground for 1 µs following each counter pulse (monoflop D20-A). This prevents glitches from reaching N11-B during the building-up phase of the D/A converter.

Sweep filter

The sawtooth voltage (V11-B, C, V12 to V17) is smoothened by a lowpass filter that can be switched between 1 Hz and 30 kHz in steps of 1-3-10. At the output of buffer N12-A, the voltage is + 5 V with the usual counter value of 3604.

Sweep output

A decoupled (N12-B) and switchable (V11-D) sweep output is available.

6.1.4 Span Setting (Span)

The sawtooth voltage SWEEP is attenuated by two D/A converters according to the desired span (0 to 5200 MHz).

The nominal value is set by means of D31 (course span tuning 12 bit).

Span/MHz = 1.3 x binary number in D31
if span > 50 MHz
Span/MHz = (Binary number in D31) / 80
if span ≤ 50 MHz

A correction value for correcting drift and nonlinearity of the YIG oscillator is set by means of D32, DAC B (fine span tuning 8 bit). This permits the span to be varied by ± 32 MHz.

$$Span\ fine/MHz = \frac{Binary\ number\ in\ D32,\ DAC\ B}{4} - 32$$

if span > 50 MHz.

With a span ≤50 MHz, the fine tuning is not performed. With the binary number = 128, span fine = 0 is fixed.

The sawtooth current corresponding to the span is either applied via V31-B to the tuning coil driver (span >50 MHz) or via V31-A to the FM coil driver (span ≤ 50 MHz).

6.1.5 Start Frequency Setting

A current corresponding to the desired start frequency (5421.4 to 10621.4 MHz) is set by means of two D/A converters and a constant current source. The current source (R109 to R111) supplies the current for 5421.4 MHz. In the following, the start frequency is understood to mean only the additive quantity 0 to 5200 MHz.

The nominal value is set by means of D33 (course tuning of start frequency 12 bit).

Start frequency/MHz = 1.3 x binary number in D33.

A correction value for correcting drift and non-linearity of the YIG oscillator is set by means of D32, DAC A (fine tuning of start frequency 8 bit). This permits the start frequency to be varied by ± 64 MHz.

$$Start\ frq.\ fine/MHz = \frac{Binary\ number\ in\ D32,\ DAC\ A}{2} - 64$$

6.1.6 Tuning Coil Driver

Current amplifier

N36 converts the sum of currents of the D/A converters into a voltage. The output stage V41 draws a current proportional to this voltage (approx. 0.27 to 0.53 A) via the tuning coil of the YIG oscillator. The current is measured across R141 by N37 and controlled to the nominal value using V41. The adjustable PD action corrects the tuning frequency response of the YIG oscillator.

Filter

To reduce the spurious FM at spans ≤50 MHz (sweeping via FM coil), two filters are connected into circuit, i.e. a lowpass (R115, C106) ahead of the output stage and an RC combination (R144, C117, C118) in parallel to the YIG tuning coil. The latter is switched on via triac V45 whose ignition and holding current flows via V48.

Power up reset

When applying the 5-V operating voltage, flip-flop D35-A is set and switches off the output stage via V31-D. After setting all D/A converters and switches correctly, the flip-flop must be reset by the processor.

6.1.7 FM Control Unit

The FM control unit generates the tuning voltage of the FM coil driver at X77.1. Depending on the span, this voltage results from the total of various voltages during the sweep. For the voltages, refer to the following table

	Span			
	above 50 MHz	25 to 50 MHz	5 to 25 MHz	below 5 MHz
Start frequency correction	X	X	X	
Span correction	X	X	X	
Sweep voltage		X	X	
FM offset (-25 MHz)		X		
PLL control voltage YIGSYN				X

Start frequency correction

The start frequency error is eliminated by synchronization of the YIG oscillator with an external PLL. The control voltage YIGSYN is applied via X13.2 and reaches the FM coil driver via D53-B, D51-C, N57-A, B, N58-B and D54-C. When the PLL has locked, the control voltage is measured by the sample and hold for the start frequency and stored. The PLL is then interrupted by D51-C and the stored control voltage connected via D51-D to the FM coil driver instead.

The sample and hold consists of the control amplifier N53 with the transistor output stage V61, V64, a diode switch V62, V63, V66, V67 and the integrator N54 with discrete FET buffer V68, V69 and storage capacitor C152. The settling time for an 18-V jump is <1 ms, the typical drift is only 3 µV/s.

Due to the steepness of 1.25 MHz/V, the YIG oscillator can be controlled by approx. ±10 MHz (see section 6.1.9).

Span correction

The error of the span or stop frequency is also eliminated by means of the PLL. The control voltage is fed from X13.2 via D53-B and D51-B to the analog multiplier N55-C, V87, N561 and further via N57-B, N58-B and D54-C to the FM coil driver. When the PLL has locked, the control voltage is measured by the sample and hold for the stop frequency and stored. The PLL is then interrupted by D51-B, the stored control voltage is connected to the FM coil driver by closing D51-A. For sample and hold, steepness and control range, refer to start frequency correction.

Multiplier

For generating the correction ramp synchronous to the sweep the span correction voltage stored in the sample and hold has to be multiplied with the sweep. The sweep voltage is applied via N55-B. N56 sets the gate voltage of V87-B such that the FET varies its drain-source resistance proportional to the sweep voltage. This voltage also controls the resistance of the second FET V87-A, which determines the gain of the span correction voltage applied at N561 via N55C. Linearization is effected by the positive feedback of N55-A, R206 or N55-D, R218 as well as by the voltage dividers R201, R202 or R210, R217. The bypass C130, R221 provides the bandwidth necessary for synchronization.

FM offset

In order to halve the maximum required tuning current by the FM coil, a sweep is made at 25 MHz $<$ span $\leq$ 50 MHz from -25 MHz to 0 to +25 MHz. By closing D54-D, a current corresponding to -25 MHz is applied to N58-B. The offset is taken into consideration in the fine tuning of the start frequency.

FM summing amplifier

N57-B, N58-B add the start frequency correction voltage, the span correction voltage multiplied with the sweep, the sweep voltage SPAN FM (span $\leq$ 50 MHz) and the -25-MHz FM offset voltage.

PLL control voltage

A synchronous sweep is made with spans $\leq$ 5 MHz. The FM control unit described so far has no effect (D54-C open). The control voltage YIGSYN is directly applied from X13.2 to the input of the FM coil driver via D54-B and the PLL is thus closed.

6.1.8 FM Coil Driver

With its adjustable PD action, N60 corrects the FM frequency response of the YIG oscillator. N61 with transistor output stage operates as voltage-controlled current source. The current is measured via the voltage drop across R273. The steepness is -14.3 mA/V or 4.29 MHz/V.

6.1.9 Control Voltage Limiter

Since the control direction is reversed, the YIG oscillator must not be pulled more than 10 MHz to lower frequencies when closing the PLL. N59-A limits the control voltage accordingly. Switchover of the threshold (D53-C, D) permits matching to the steepness with start/stop synchronization or synchronous sweep. Diodes V72 to V76 limit the tuning range towards higher frequencies to approx. 12 MHz (start/stop synchronization) or 20 MHz (synchronous sweep).

6.1.10 External Tuning Voltages

Three decoupled frequency-proportional voltages are required for tuning external circuits (frequency response correction, etc.).

N74 derives these voltages directly from the D/A converters for coarse tuning of start frequency and span. V93 switches the steepness for span ≤ 50 MHz.

Tuning voltage	PSAWT	NSAWT	SAWT
Steepness	2 V/GHz	-2 V/GHz	5.555 V/GHz

The voltages are 0 at the YIG oscillator frequency 5421.4 MHz.

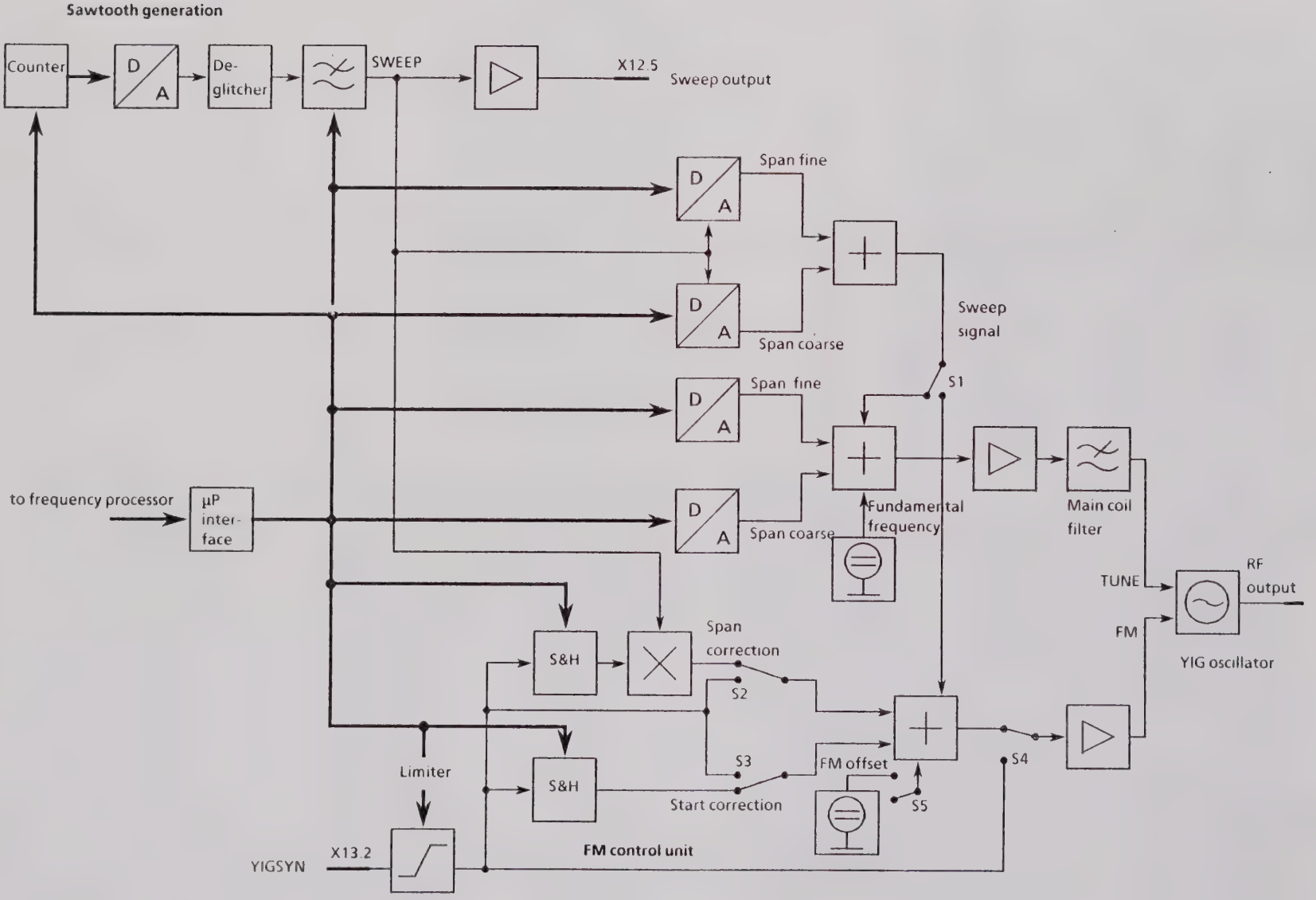

Fig. 6-1 Block diagram "YIG Pretune" + "YIG Oscillator"

6.2 Testing and Adjustment

Test equipment

Signal generator:
10 Hz to 1 MHz, sinewave (SPN)

Signal generator:
76 MHz to 4.5 GHz, -20 dBm

Adjustable voltage source:
± 12 V (NGPS)

Digital multimeter:
0.02 % at 10 VDC (UDS 5)

AC Voltmeter:
10 Hz to 1 MHz (URE)

Frequency counter:
5.4 GHz to 10.7 GHz, 50 Ω

Oscilloscope:
20 MHz (BOP, BOL)

Test sequence

A special control software is available for the tests and adjustments and carries out all required settings on the module, identified below by *.

The control software is called up by means of

Special Function ⇒ Service 1.43. (Function). (value).

SF 1.43.00 or Preset can be used at any time to return to normal mode.

Adjustment sequence

The sequence can be obtained from the following diagram. An adjustment situated at the top is a prerequisite for all adjustments situated below. In all other cases, the sequence is optional.

<table>
<tr><td colspan="3">6.2.1 -5 V bias, R283</td><td rowspan="2">6.2.12
Start freq
S&H
offset
R193</td><td rowspan="2">6.2.13
Stop freq
S&H
offset
R183</td><td colspan="2">6.2.8 PSAWT offset (test)</td></tr>
<tr><td colspan="3">6.2.2 Min. frequency, R109</td><td rowspan="3">6.2.9
PSAWT
SF gain
R313</td><td rowspan="3">6.2.10
PSAWT
SP gain
R345</td></tr>
<tr><td rowspan="3">6.2.3
Max.
start freq.
R81</td><td colspan="2">6.2.4 Max. span, R92</td><td rowspan="3"></td><td rowspan="3"></td></tr>
<tr><td colspan="2">6.2.5 FM gain, R235</td></tr>
<tr><td>6.2.6
Start/stop
sync. limit
R243</td><td>6.2.7
Synchronized
sweep limit
R245</td><td>6.2.11
SAWT
amplitude
R338</td></tr>
<tr><td colspan="5">6.2.14 Tuning comp. R137, R139/FM comp. R256, R258</td><td colspan="2"></td></tr>
</table>

Note: The module can only be adjusted together with the associated YIG oscillator. The adjustments 6.2.2 to 6.2.7 and 6.2.14 are necessary following replacement of the YIG oscillator or the module itself.

6.2.1 Adjusting the -5-V Bias

Use R283 to set voltage at X11.12 to

-5 ± 0.05 V with YIG oscillator "Sivers" or
-4.5 ± 0.05 V with YIG oscillator "Watkins Johnson"

The YIG oscillator must be connected.

6.2.2 Adjusting the Minimum Frequency

SF 1.43.02

* Basic setting

* Hysteresis setting

  Adjust YIG oscillator frequency to 5421.4 ± 1 MHz using R109.

Basic setting			
Variable	Port	Address	Data decimal
SPCT LB	D31	0	0
SPCT HB	D31	1	0
SFCT LB	D33	2	0
SFCT HB	D33	3	0
SWPFIL	D19	4	32
TUNSWI	D34	5	160
FMSWI1	D52	6	0
SWPCNT LB	D16, D17	7	0
SWPCNT HB	D18	8	0
FMSWI2	D55	9	138
SFFT	D32	10	128
SPFT	D32	11	128
Wait at least 10 ms			
FMSWI1	D52	6	3
TUNSWI	D34	5	176
X21.C17 L level			

Hysteresis setting			
Variable	Port	Address	Data
SFCT LB	D33	2	160
SFCT HB	D33	3	15
Wait at least 10 ms			
SFCT LB	D33	2	0
SFCT HB	D33	3	0
Wait at least 10 ms			
SFCT LB	D33	2	160
SFCT HB	D33	3	15
Wait at least 10 ms			
SFCT LB	D33	2	0
SFCT HB	D33	3	0

6.2.3 Adjusting the Maximum Start Frequency

SF 1.43.03

* Basic setting

* Hysteresis setting

*

Variable	Port	Address	Data
SFCT LB	D33	2	160
SFCT HB	D33	3	15

Adjust YIG oscillator frequency to 10621.4 ± 1 MHz using R81.

6.2.4 Adjusting the Maximum Span

SF 1.43.04

* Basic setting

* Hysteresis setting

*

Variable	Port	Address	Data
SPCT LB	D31	0	160
SPCT HB	D31	1	15
SWPCNT HB	D18	8	14
SWPCNT LB	D16, D17	7	20

Adjust YIG oscillator frequency to 10621.4 ± 1 MHz using R92.

6.2.5 Adjusting the FM Gain

SF 1.43.05

* Basic setting

*

Variable	Port	Address	Data
TUNSWI	D34	5	124
FMSWI1	D52	6	11
SPCT LB	D31	0	208
SPCT HB	D31	1	7

Measure YIG oscillator frequency
(typ. 5421.4 MHz); wait until drift has settled.

SF 1.43.06

*

Variable	Port	Address	Data
SWPCNT HB	D18	8	14
SWPCNT LB	D16, D17	7	20

YIG oscillator frequency must now be 25 ± 0.1 MHz higher.
Adjust using R235.

6.2.6 Adjusting the Start/Stop Synchronization Limit

SF 1.43.07

* Basic setting

*

Variable	Port	Address	Data
TUNSWI	D34	5	188
FMSWI1	D52	6	11
FMSWI2	D55	9	137

Remove cable from X13 and apply 0 V to X13.2.
Measure YIG oscillator frequency
(typ. 5421.4 MHz); wait until drift has settled.
Apply -12 ± 1 V at X13.2.
YIG oscillator frequency must now be 9.4 ± 0.1 MHz lower.
Adjust using R243

6.2.7 Adjusting the Synchronized Sweep Limit

SF 1.43.08

* Basic setting

*

Variable	Port	Address	Data
TUNSWI	D34	5	188
FMSWI2	D55	9	22

Remove cable from X13 and apply 0 V to X13.2.
Measure YIG oscillator frequency
(typ. 5421.4 MHz); wait until drift has settled.
Apply -8 ± 1 V at X13.2.
YIG oscillator frequency must now be 9.4 ± 0.1 MHz lower.
Adjust using R245.

6.2.8 Testing the PSAWT Offset

SF 1.43.31

* Basic setting

Voltage at X21.A30 must be 0 ± 5 mV.

6.2.9 Adjusting the PSAWT SF Gain

SF 1.43.09

* Basic setting

*

Variable	Port	Address	Data
SFCT LB	D33	2	6
SFCT HB	D33	3	15

Adjust voltage at X21.A30 to 10 ± 0.003 V using R313.

6.2.10 Adjusting the PSAWT SP Gain

SF 1.43.10

* Basic setting

*

Variable	Port	Address	Data
SPCT LB	D31	0	6
SPCT HB	D31	1	15
SWPCNT HB	D18	8	14
SWPCNT LB	D16, D17	7	20

Adjust voltage at X21.A30 to 10 ± 0.003 V using R345.

6.2.11 Adjusting the SAWT Amplitude

SF 1.43.11

* Basic setting

*

Variable	Port	Address	Data
SFCT LB	D33	2	1
SFCT HB	D33	3	3

Adjust voltage at X21.C30 to 5.554 ± 0.003 V using R338.

6.2.12 Adjusting Start Frequency Sample and Hold Offset

Only required after replacing V68 or V69.

SF 1.43.12

* Basic setting

*

Variable	Port	Address	Data
FMSWI1	D52	6	2

Adjust voltage at X92 to 0 ± 10 mV using R193.

6.2.13 Adjusting Stop Frequency Sample and Hold Offset

Only required after replacing V58 or V59!

SF 1.43.13

* Basic setting

*

Variable	Port	Address	Data
FMSWI1	D52	6	1

Adjust voltage at X72 to 0 ± 10 mV using R183.

6.2.14 Adjusting Tuning Compensation and FM Compensation

Connect RF input of the instrument to cystal-referenced signal generator.

a) Tuning compensation

Instrument settings:
Preset
Special function ⇒ Detector ⇒ Pos Peak

Generator settings:
4.5 GHz, -20 dBm

Set frequency reading to 4.5 ±0 GHz using R137, read frequency with Marker Peak.
Set generator to 0.5 GHz.
Set frequency reading to 0.5 ±0 GHz using R139.
Repeat both adjustments once.

b) FM compensation

Instrument settings:
Preset
Center freq. 100 MHz, span 50 MHz
Resolution bandwidth 100 kHz
Special function ⇒ Detector ⇒ Pos Peak

Generator settings:
120 MHz, -20 dBm

Set frequency reading to 120 ±0 MHz using R258, read frequency with Marker Peak.
Set generator to 76 MHz.
Set frequency reading to 76 ±0 MHz using R256.
Repeat only the first adjustment once using R258.

6.2.15 Testing the Sawtooth Generator

Connect Y-input of oscilloscope to X33.2 and input Ext. Trigger (falling edge) to X21.17C.

SF 1.43.14

* Basic setting

* The repetitive signals shown in the following diagram must be applied to X21.15C and X21.17C (generated by software routine):

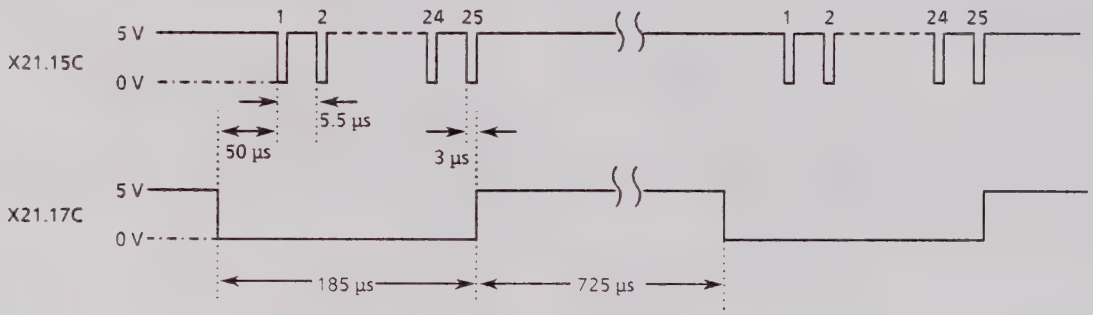

The oscilloscope must show a uniform, linearly rising staircase curve (25 steps).

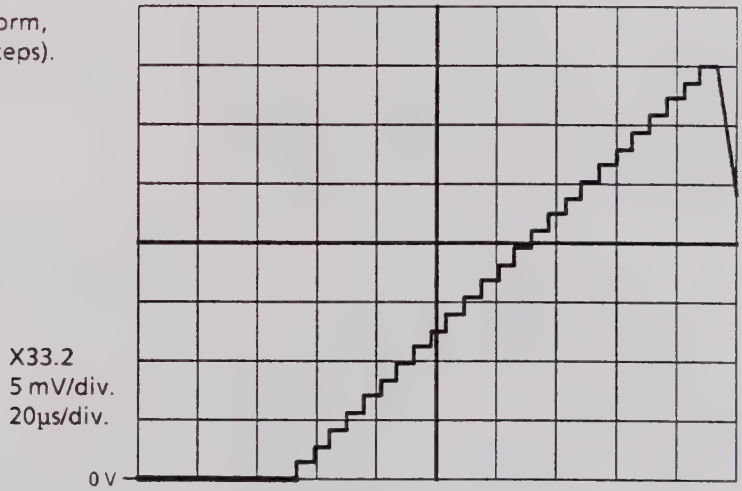

6.2.16 Testing the Sweep Output

SF 1.43.31

* Basic setting

The voltage at X12.5 must be 0 ± 10 mV (start of sweep).

SF 1.43.06

*

Variable	Port	Address	Data
SWPCNT HB	D18	8	14
SWPCNT LB	D16, D17	7	20

The voltage at X12.5 must be 5 ± 0.06 V (end of sweep).

SF 1.43.15

*

Variable	Port	Address	Data
SWPFIL	D19	4	34

The voltage at X12.5 must be 0 ± 10 mV (sweep off).

6.2.17 Testing the FRQ STP Output
(Frequency Step)

Connect oscilloscope to X21.C19.

SF 1.43.16

* Basic setting

* Apply a TTL signal of 5.5 µs period to X21.C15 (generated by software routine).

A squarewave signal with a period of 4 x 5.5 µs = 22 µs and an amplitude of 0 to 5 V must be measured at X21.C19.

6.2.18 Testing the Sweep Filter

Remove jumper from X33 and connect sinewave generator with $R_i < 10\ \Omega$, rms voltage 250 ± 5 mV to X33.3.
Connect AC voltmeter to X34.1.

SF 1.43.17 (value)

* Basic setting

Perform the following series of measurements:

Value	*Variable	*Port	*Address	*Data	Generator at frequency	Nominal measured value at X34.1
1				34	800 kHz	
2				18	265 kHz	
3				10	80 kHz	
4				6	26.5 kHz	10.5 ± 2 mV_{rms}
5	SWPFIL	D19	4	98	8 kHz	each
6				82	2.65 kHz	
7				74	800 Hz	
8				70	265 Hz	
9				202	80 Hz	
10				198	26.5 Hz	

Plug jumper onto X33.2-3

6.2.19 Testing the Fine Tuning of the Start Frequency

SF 1.43.31

* Basic setting

Measure YIG oscillator frequency (typ. 5421.4 MHz); f_o = measured value

SF 1.43.18

*

Variable	Port	Address	Data
SFFT	D32	10	0

YIG oscillator frequency must be f_o -(64 ± 5) MHz.

SF 1.43.19

*

Variable	Port	Address	Data
SFFT	D32	10	255

YIG oscillator frequency must be f_o + (63.5 ± 5) MHz.

6.2.20 Testing the Fine Tuning of the Span

SF 1.43.20

* Basic setting

*

Variable	Port	Address	Data
SWPCNT HB	D18	8	14
SWPCNT LB	D16, D17	7	20

Measure YIG oscillator frequency (typ. 5421.4 MHz); f_o = measured value

SF 1.43.21

*

Variable	Port	Address	Data
SPFT	D32	11	0

YIG oscillator frequency must be f_o -(32 ± 2.5) MHz.

SF 1.43.22

*

Variable	Port	Address	Data
SPFT	D32	11	255

YIG oscillator frequenz must be f_o + (31.75 ± 2.5) MHz.

6.2.21 Testing Tuning Filter and Main Coil Filter

Remove jumper from X33 and connect sinewave generator (100 mV $_{rms}$, 1 kHz) to X33.3.

SF 1.43.23. (value)

* Basic setting

*

Variable	Port	Address	Data
SPCT LB	D31	0	160
SPCT HB	D31	1	15

Perform the following series of measurements:

Value	*Variable	*Port	*Address	*Data	Test point	VAC RMS	Remark
1	TUNSWI	D34	5	176	V41.3	55 ± 17 mV	Filter off
2	TUNSWI	D34	5	184	V41.3	6 ± 2.5 mV	Tuning filter on
3	TUNSWI	D34	5	152	V41.3	53 ± 20 mV	Tuning filter, fast settling
					V41.2	3.6 ± 1.6 V	
4	TUNSWI	D34	5	156	V41.2	240 ± 80 mV	Main coil filter on

Plug jumper onto X33.2-3

6.2.22 Testing the Start/Stop Synchronization

Remove plug from X13 and connect adjustable voltage source to X13.2.

6.2.22.1 Start Frequency Sample and Hold

Connect multimeter to X76.1.

SF 1.43.24. (value)

* Basic setting

*

Variable	Port	Address	Data
FMSWI2	D55	9	137

Perform the following series of measurements:

Waiting time	Value	*FMSWI1 Port D52 Address 6	Voltage source at X13.2 to:	Nominal value of voltage at X76.1	Remark
---	1	11	-7 ± 0.01 V	---	Analog presetting
---	2	10 (2 ms) → 11	-7 ± 0.01 V	---	Sampling presetting
---			+7 ± 0.01 V	-7 ± 0.1 V	Pos. test voltage, measured value = V_1
---	3	10 (2 ms) → 7	+7 ± 0.01 V	---	Sampling
10 s			---	V_1 ± 14 mV	Settling error, measured value = V_2
10 s			---	V_2 ± 4 mV	Drift in 10 s at 20 to 25° C
---	1	11	-7 ± 0.01 V	+7 ± 0.1 V	Neg. test voltage, measured value = V_3
---	3	10 (2 ms) → 7	-7 ± 0.01 V	---	Sampling
10 s			---	V_3 ± 14 mV	Settling error, measured value = V_4
10 s			---	V_4 ± 4 mV	Drift in 10 s at 20 to 25° C

6.2.22.2 Multiplier

Connect multimeter to X75.1.

SF 1.43.25. (value)

* Basic setting

*

Variable	Port	Address	Data
FMSWI1	D52	6	19
FMSWI2	D55	9	137

Perform the following series of measurements:

Value	*SWPCNT HB Port D18 Address 8	*SWPCNT LB Port D16, D17 Address 7	Voltage source at X13 2 to:	Nominal value of voltage at X75.1	Remark
1	14	20	200 ± 1 mV	200 ± 50 mV	Gain, measured value = V_1
2	7	10	Unchanged	$\frac{V1}{2}$ ± 4 mV	Linearity: Error middle of sweep
3	0	0	Unchanged	0 ± 2 mV	Offset: Error start of sweep
1	14	20	-200 ± 1 mV	-200 ± 50 mV	Gain, measured value = V_2
2	7	10	Unchanged	$\frac{V2}{2}$ ± 4 mV	Linearity: Error middle of sweep
3	0	0	Unchanged	0 ± 2 mV	Offset: Error start of sweep
1	14	20	2 ± 0.01 V	2 ± 0.1 V	Gain, measured value = V_3
2	7	10	Unchanged	$\frac{V3}{2}$ ± 40 mV	Linearity: Error middle of sweep
3	0	0	Unchanged	0 ± 20 mV	Offset: Error start of sweep
1	14	20	-2 ± 0.01 V	-2 ± 0.1 V	Gain, measured value = V_4
2	7	10	Unchanged	$\frac{V4}{2}$ ± 40 mV	Linearity: Error middle of sweep
3	0	0	Unchanged	0 ± 20 mV	Offset: Error start of sweep
1	14	20	7 ± 0.04 V	7 ± 0.35 V	Gain, measured value = V_5
2	7	10	Unchanged	$\frac{V5}{2}$ ± 0.14 V	Linearity: Error middle of sweep
3	0	0	Unchanged	0 ± 40 mV	Offset: Error start of sweep
1	14	20	-7 ± 0.04 V	-7 ± 0.35 V	Gain, measured value = V_6
2	7	10	Unchanged	$\frac{V6}{2}$ ± 0.14 V	Linearity: Error middle of sweep
3	0	0	Unchanged	0 ± 40 mV	Offset: Error start of sweep

6.2.22.3 Stop Frequency Sample and Hold

Connect multimeter to X76.1

SF 1.43.26. (value)

* Basic setting

*

Variable	Port	Address	Data
SWPCNT HB	D18	8	14
SWPCNT LB	D16, D17	7	20
FMSWI2	D55	9	137

Perform the following series of measurements:

Waiting time	Value	*FMSWI1 Port D52 Address 6	Voltage source at X13.2 to:	Nominal value of voltage at X76.1	Remark
---	1	19	-7 ± 0.01 V	---	Analog presetting
---	2	17 (2 ms) → 19	-7 ± 0.01 V	---	Sampling presetting
---			+7 ± 0.01 V	-7 ± 0.4 V	Pos. test voltage, measured value = V_1
---	3	17 (2 ms) → 35	+7 ± 0.01 V	---	Sampling
10 s			---	V_1 ± 14 mV	Settling error, measured value = V_2
10 s			---	V_2 ± 4 mV	Drift in 10 s at 20 to 25° C
---	1	19	-7 ± 0.01 V	+7 ± 0.4 V	Neg. test voltage, measured value = V_3
---	3	17 (2 ms) → 35	-7 ± 0.01 V	---	Sampling
10 s			---	V_3 ± 14 mV	Settling error, measured value = V_4
10 s			---	V_4 ± 4 mV	Drift in 10 s at 20 to 25° C

6.2.23 Testing the FM Summing Amplifier

Remove plug from X13 and connect adjustable voltage source to X13.2 and multimeter to X77.1.

SF 1.43.27.(value)

* Basic setting

*

Variable	Port	Address	Data
FMSWI1	D52	6	11

Perform the following two measurements:

Value	*FMSWI2 Port D55 Address 9	Voltage source at X13.2. to:	Nominal value of voltage at X77.1	Remark
1	201	0 ± 10 mV	-5.56 ± 0.7 V	FM offset
2	137	7 ± 0.01 V	2.06 ± 0.27 V	Sync. sum amplifier

6.2.24 Testing the FM Coil Driver

Connect adjustable voltage source to X77.1

SF 1.43.28

* Basic setting

*

Variable	Port	Address	Data
FMSWI2	D55	9	10

Perform the following series of measurements:

Voltage source at X77.1 to:	Nominal value of YIG oscillator frequency	Remark
0 ± 10 mV	5421 MHz typ.	Reference frequency Measured value = F1
+9.1 ± 0.01 V	F1 + (39 ± 4.5) MHz	
-9.1 ± 0.01 V	F1 - (39 ± 4.5) MHz	

6.2.25 Testing the PSAWT Voltage with FM Sweep

Connect multimeter to X21.A30

SF 1.43.29

* Basic setting

*

Variable	Port	Address	Data	Remark
TUNSWI	D34	5	112	FM sweep

Voltage at X21.A30 must be 0 ± 4 mV;
V_1 = measured value

SF 1.43.30

*

Variable	Port	Address	Data	Remark
SPCT LB	D31	0	160	4000 = 50 MHz span
SPCT HB	D32	1	15	
SWPCNT HB	D18	8	14	3604 = End of sweep
SWPCNT LB	D16, D17	7	20	

Voltage at X21.A30 must be V_1 + (100 ± 2) mV.

6.3 Troubleshooting

If several faults (6.3.2 to 6.3.4) occur simultaneously, troubleshooting must be carried out section by section as presented in the following.

6.3.1 YIG Oscillator Outputs no RF Signal

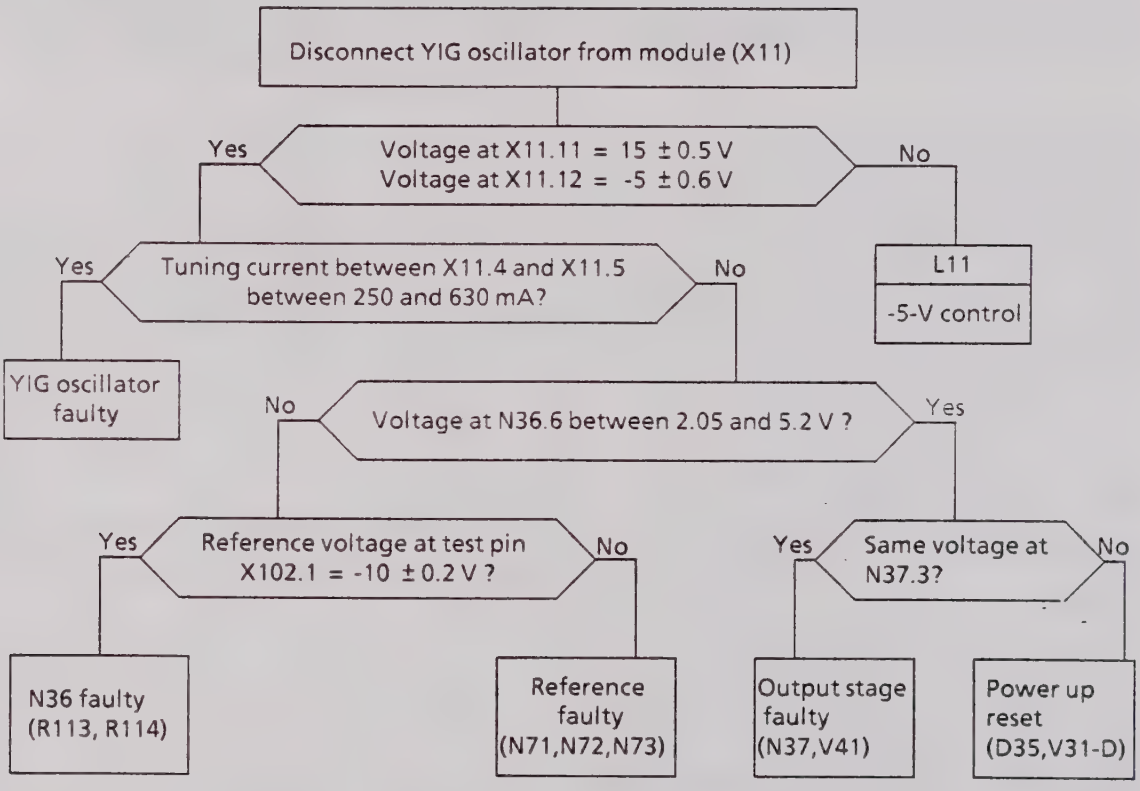

6.3.2 Start Frequency Incorrect

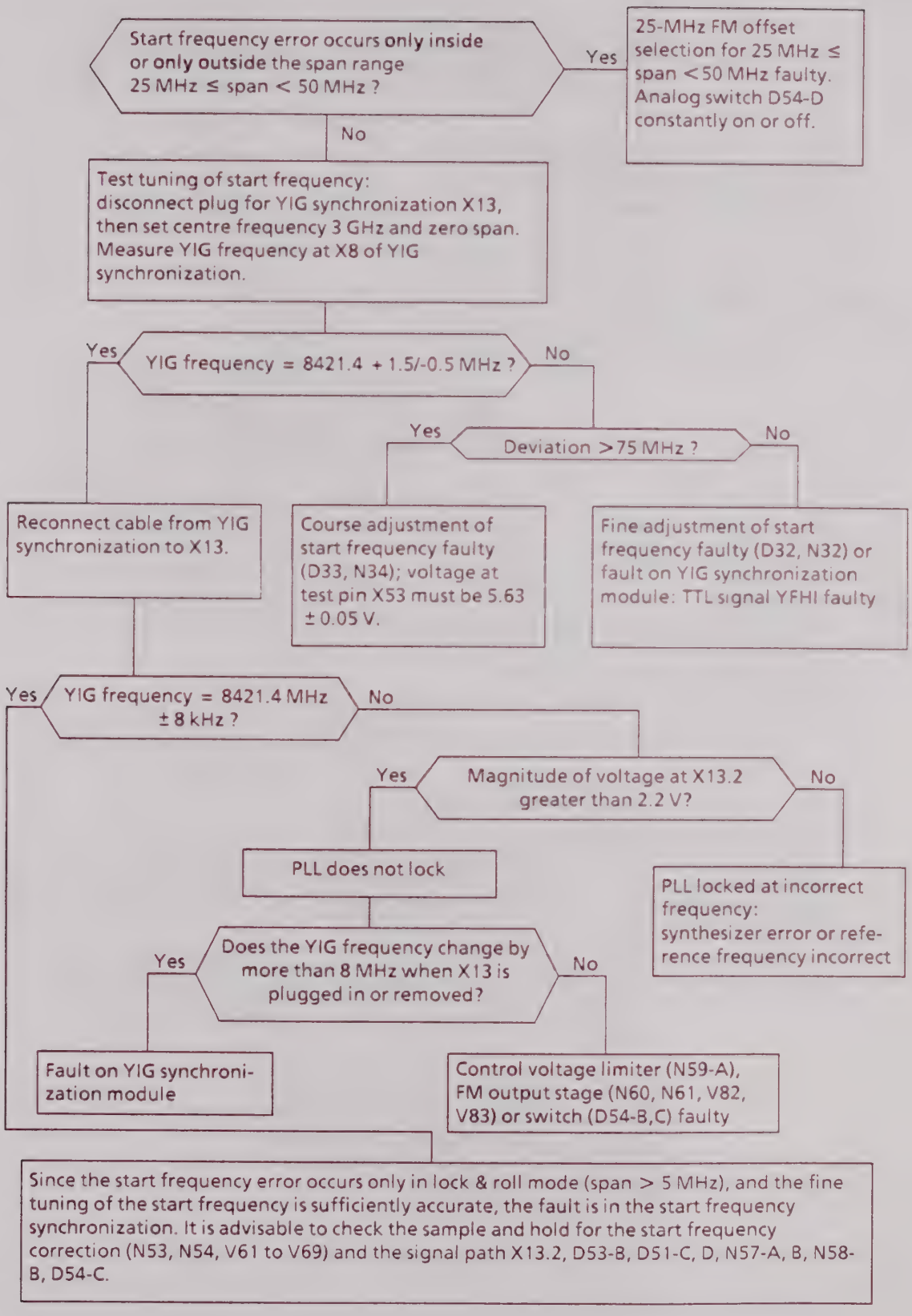

6.3.3 No Sweep with Spans >5 MHz

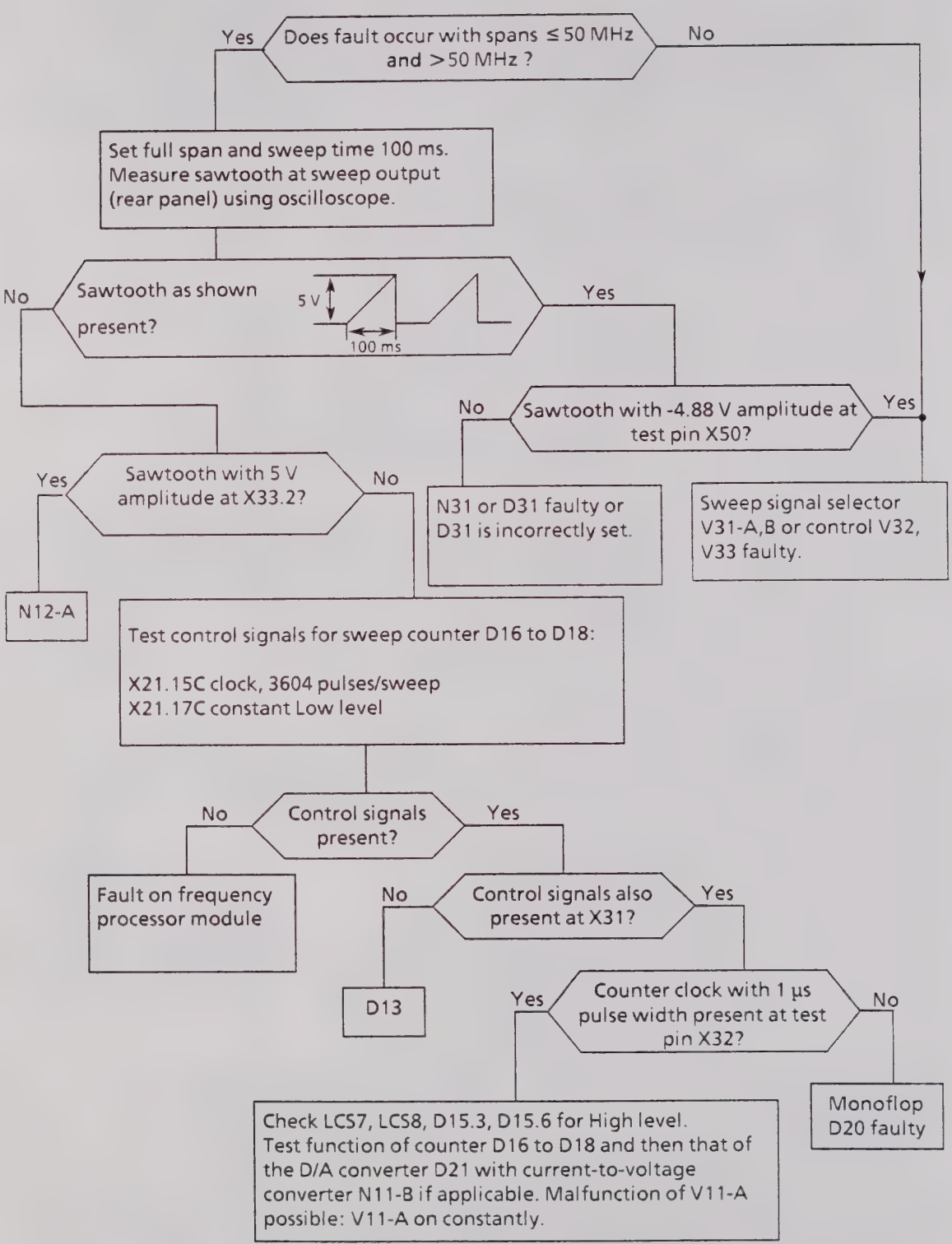

6.3.4 Stop Frequency Incorrect

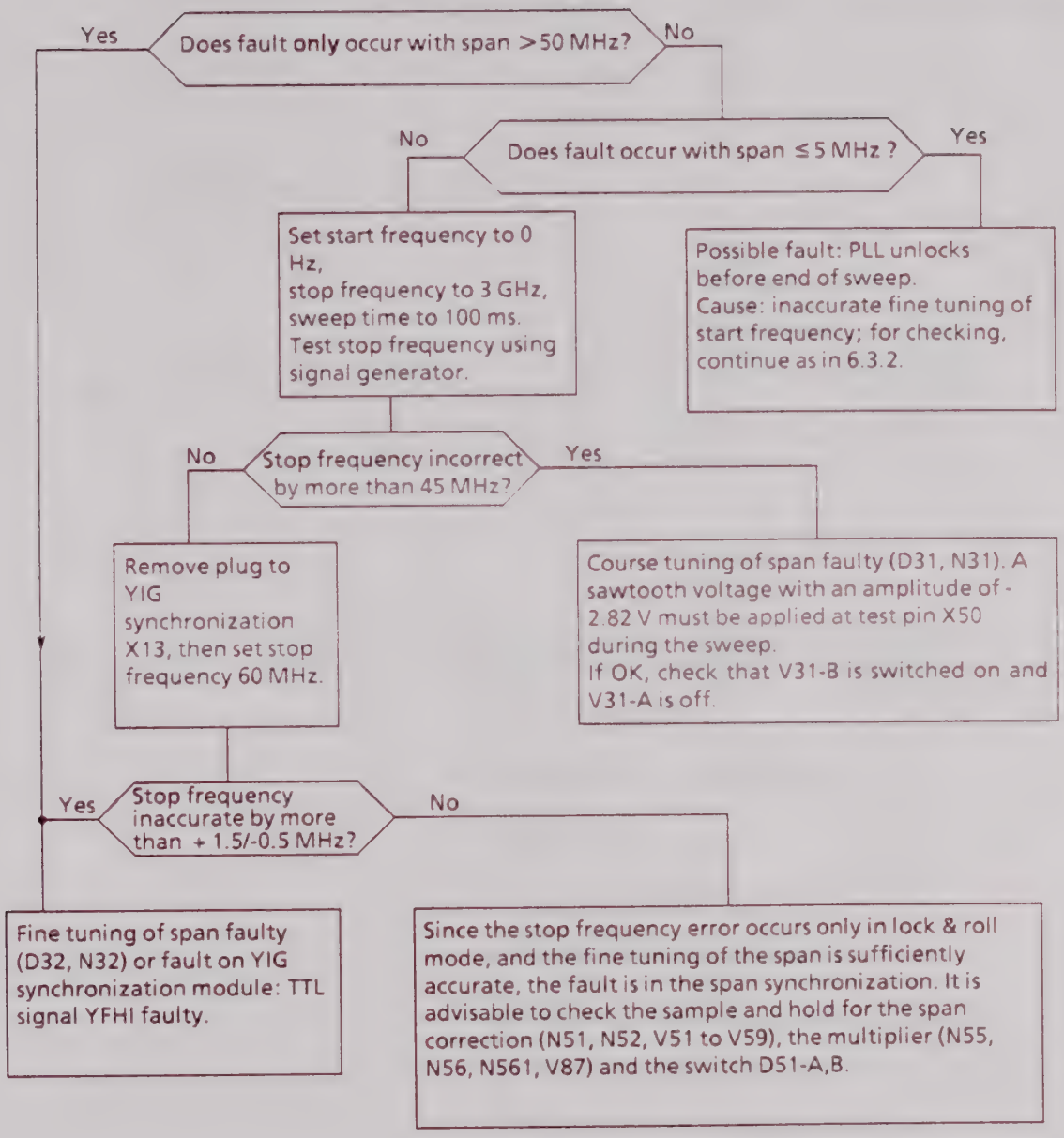

6.3.5 Signal Timing with Start/Stop Synchronization

Sweep time 100 ms, span >5 MHz

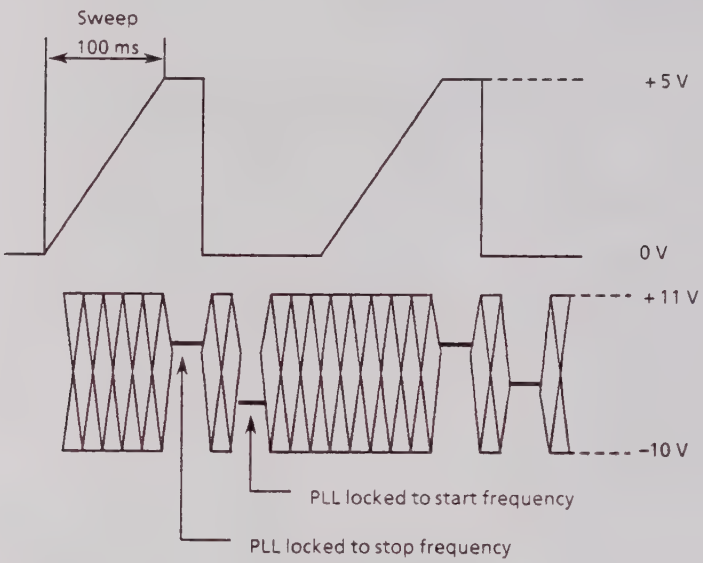

Sweep output X12.5

YIGSYN X13.2
(Source: YIG synchronization)

The YIGSYN voltage may be between -7.5 and + 8 V with the PLL locked depending on the magnitude of the frequency error to be corrected. The YIGSYN voltage is approx. -10 V or + 11 V if the PLL is not locked.

ROHDE&SCHWARZ

Schaltteillisten
Stromläufe
Bestückungspläne

Part lists
Circuit diagrams
Components plans

Listes des pièces détachées
Schémas de Circuit
Plans des composants

(R 29500 Bl 2)
895.1000 Bl. 2

Kennz. Comp.No.	Benennung Designation	Sachnummer Stock No.	Hersteller Manufacturer	Bezeichnung Designation	enthalten in contained in
	ZUGEH.STROML./CIRC.DIAGR. 848.6506 S				
C1 ..10	CC 100NF+-10%50V5K 1200VIE CAPACITOR	CC 084.5350	UNION CARB	CK05BX104K	
C11	CC 10NF-20+50%7X8R4000 CAPACITOR	CC 087.7525	VALVO	2222 63051 64051103	
C12	CC 10NF-20+50%7X8R4000 CAPACITOR	CC 087.7525	VALVO	2222 63051 64051103	
C13	CE 10UF -10+50% 63V 9X13 ELECTROLYTIC CAPACITOR	CE 022.7650	ROEDERST	ELKOEK10/63	
C18	CC 100PF+-2%6X9NP0 CAPACITOR	CC 087.6541	VALVO	2222 678 10101	
C21 ..28	CC 68PF+-2%6X7NP0 CAPACITOR	CC 087.6529	VALVO	2222 678 10689	
C31 ..34	CC 100PF+-2%6X9NP0 CAPACITOR	CC 087.6541	VALVO	2222 678 10101	
C37 ..40	CC 100PF+-2%6X9NP0 CAPACITOR	CC 087.6541	VALVO	2222 678 10101	
C42	CC 33PF+-2%4X5NP0 CAPACITOR	CC 087 6487	VALVO	2222 678 10339	
C52	CC 33PF+-2%4X5NP0 CAPACITOR	CC 087.6487	VALVO	2222 678 10339	
C53	CC 33PF+-2%4X5NP0 CAPACITOR	CC 087.6487	VALVO	2222 678 10339	
C54	CC 180PF+-2%6X7N750 CAPACITOR	CC 087.6935	VALVO	2222 678 58181	
C55	CC 2,2NF+-10%5X6R2000 CAPACITOR	CC 087.7060	VALVO	2222 63051 222	
C56	CC 100NF+-10%50V5K 1200VIE CAPACITOR	CC 084 5350	UNION CARB	CK05BX104K	
C57	CC 100NF+-10%50V5K 1200VIE CAPACITOR	CC 084 5350	UNION CARB	CK05BX104K	
C58	CC 1NF+-1% 50V NP0 1206 CERAMIC CHIP CAPACITOR	CC 007 7398	VITRAMON	VJ1206 A 102 F FAT	
C61	CK 33NF+-5%63V5RM MKT CAPACITOR	CK 099 2900	WIMA	MKS2	
C62	CK 100NF+-5%63V5RM MKT CAPACITOR	CK 099 2930	WIMA	MKS/2/63/0.1UF/5%	
C63	CK 330NF+-5%63V5RM MKT CAPACITOR	CK 099.2969	WIMA	MKS2	
C64	CK 1UF+-10%50V5RM MKT CAPACITOR	CK 099.2998	WIMA	MKS2/50/1UF/10%	
C65	CC 68PF+-2%6X7NP0 CAPACITOR	CC 087.6529	VALVO	2222 678 10689	
C66	CC 100NF+-10%50V5K 1200VIE CAPACITOR	CC 084.5350	UNION CARB	CK05BX104K	
C67	CC 100NF+-10%50V5K 1200VIE CAPACITOR	CC 084.5350	UNION CARB	CK05BX104K	
C71	CC 10NF-20+50%7X8R4000 CAPACITOR	CC 087.7525	VALVO	2222 63051 64051103	
C82	CC 100NF+-10%50V5K 1200VIE CAPACITOR	CC 084.5350	UNION CARB	CK05BX104K	
C83	CC 100NF+-10%50V5K 1200VIE CAPACITOR	CC 084.5350	UNION CARB	CK05BX104K	
C84	CC 15PF+-2%3X4NP0 CAPACITOR	CC 087.6441	VALVO	2222 678 10159	
C85	CC 15PF+-2%3X4NP0 CAPACITOR	CC 087.6441	VALVO	2222 678 10159	
C87	CC 10NF-20+50%7X8R4000 CAPACITOR	CC 087.7525	VALVO	2222 63051 64051103	
C88 ..92	CC 100NF+-10%50V5K 1200VIE CAPACITOR	CC 084.5350	UNION CARB	CK05BX104K	
C93	CC 100NF+-10%50V5K 1200VIE CAPACITOR	CC 084.5350	UNION CARB	CK05BX104K	
C94	CC 1NF+-1% 50V NP0 1206 CERAMIC CHIP CAPACITOR	CC 007.7398	VITRAMON	VJ1206 A 102 F FAT	
C95	CC 33PF+-2%4X5NP0 CAPACITOR	CC 087.6487	VALVO	2222 678 10339	
C96 ..99	CC 100NF+-10%50V5K 1200VIE CAPACITOR	CC 084.5350	UNION CARB	CK05BX104K	
C100	CC 2,2NF+-10%5X6R2000 CAPACITOR	CC 087.7060	VALVO	2222 63051 222	
C101	CC 33PF+-2%4X5NP0 CAPACITOR	CC 087.6487	VALVO	2222 678 10339	
C103	CK 10NF+-5%63V5RM MKT CAPACITOR	CK 099.2869	WIMA	MKS2	

Kennz. Comp.No.	Benennung Designation	Sachnummer Stock No.	Hersteller Manufacturer	Bezeichnung Designation	enthalten in contained in
C105	CC 10NF-20+50%7X8R4000 CAPACITOR	CC 087.7525	VALVO	2222 63051 64051103	
C106	CK 1UF+-10%50V5RM MKT CAPACITOR	CK 099.2998	WIMA	MKS2/50/1UF/10%	
C107	CK 4,7NF+-20%100V RM7,5 PLASTIC FOIL CAPACITOR	CK 006.4495	ROEDERST	1848-247/0+20%	
C111	CK 100NF+-5%63V5RM MKT CAPACITOR	CK 099.2930	WIMA	MKS/2/63/0,1UF/5%	
C114	CC 33PF+-2%4X5NP0 CAPACITOR	CC 087.6487	VALVO	2222 678 10339	
C115	CK 100NF+-5%63V5RM MKT CAPACITOR	CK 099.2930	WIMA	MKS/2/63/0,1UF/5%	
C117	CE 100UF-10+75% 20V10X34J ELECTROLYTIC CAPACITOR	CE 022.5070	SPRAGUE	ELK0600D107G030DE5	
C118	CK 1UF+-10%50V5RM MKT CAPACITOR	CK 099.2998	WIMA	MKS2/50/1UF/10%	
C121	CC 100NF+-10%50V5K1200VIE CAPACITOR	CC 084.5350	UNION CARB	CK05BX104K	
C122	CE 47UF-10+50% 40V 9X13 ELECTROLYTIC CAPACITOR	CE 006.7142	ROEDERST	EK 00 CB 247 G	
C124	CC 100NF+-10%50V5K1200VIE CAPACITOR	CC 084.5350	UNION CARB	CK05BX104K	
C125	CC 100NF+-10%50V5K1200VIE CAPACITOR	CC 084.5350	UNION CARB	CK05BX104K	
C129	CC 150PF+-2%6X9N150 CAPACITOR	CC 087.6735	VALVO	2222 678 34151	
C130	CK 6,8NF +-1% 63V RM5 KP POLYPROPYLENE CAPACITOR	CK 007.7646	ROE	KP1830-268/061-R	
C131 ..148	CC 100NF+-10%50V5K1200VIE CAPACITOR	CC 084.5350	UNION CARB	CK05BX104K	
C151	CK 220NF+-20%100V MKP CAPACITOR	292.5606	ROEDERST	MKP 1840-422/01	
C152	CK 220NF+-20%100V MKP CAPACITOR	292.5606	ROEDERST	MKP 1840-422/01	
C153	CC 15PF+-2%3X4NP0 CAPACITOR	CC 087.6441	VALVO	2222 678 10159	
C154	CC 15PF+-2%3X4NP0 CAPACITOR	CC 087.6441	VALVO	2222 678 10159	
C155	CC 2,2NF+-10%5X6R2000 CAPACITOR	CC 087.7060	VALVO	2222 63051 222	
C156	CK 220NF+-5%63V5RM MKT CAPACITOR	CK 099.2952	WIMA	MKS2	
C157	CC 10PF+-0,25PF3X4NP0 CAPACITOR	CC 087.6429	VALVO	2222 678 09109	
C161	CC 22PF+-2%4X5NP0 CAPACITOR	CC 087.6464	VALVO	2222 678 10229	
C162	CC 10PF+-0,25PF3X4NP0 CAPACITOR	CC 087.6429	VALVO	2222 678 09109	
C163	CC 1NF+-10%63V K2000-CERAMIC CAPACITOR	CC 022.0784	VALVO	2222 63051 102	
C165	CC 27PF+-2%4X5NP0 CAPACITOR	CC 087.6470	VALVO	2222 678 10279	
C168	CC 100NF+-10%50V5K1200VIE CAPACITOR	CC 084.5350	UNION CARB	CK05BX104K	
C169	CE 100UF-10+50% 16V 9X13 ELECTROLYTIC CAPACITOR	CE 006.7165	ROEDERST	EK 00CB 310 D	
C201	CC 100NF+-10%50V5K1200VIE CAPACITOR	CC 084.5350	UNION CARB	CK05BX104K	
C202	CC 100NF+-10%50V5K1200VIE CAPACITOR	CC 084.5350	UNION CARB	CK05BX104K	
C203	CE 47UF-10+50% 40V 9X13 ELECTROLYTIC CAPACITOR	CE 006.7142	ROEDERST	EK 00 CB 247 G	
C204	CC 100NF+-10%50V5K1200VIE CAPACITOR	CC 084.5350	UNION CARB	CK05BX104K	
C205	CC 100NF+-10%50V5K1200VIE CAPACITOR	CC 084.5350	UNION CARB	CK05BX104K	
C206	CE 47UF-10+50% 40V 9X13 ELECTROLYTIC CAPACITOR	CE 006.7142	ROEDERST	EK 00 CB 247 G	
C208	CC 100NF+-10%50V5K1200VIE CAPACITOR	CC 084.5350	UNION CARB	CK05BX104K	
C209	CC 100NF+-10%50V5K1200VIE CAPACITOR	CC 084.5350	UNION CARB	CK05BX104K	
C210	CE 47UF-10+50% 40V 9X13 ELECTROLYTIC CAPACITOR	CE 006.7142	ROEDERST	EK 00 CB 247 G	
C211	CC 100NF+-10%50V5K1200VIE CAPACITOR	CC 084.5350	UNION CARB	CK05BX104K	
C212	CC 100NF+-10%50V5K1200VIE CAPACITOR	CC 084.5350	UNION CARB	CK05BX104K	

Kennz. Comp.No.	Benennung Designation	Sachnummer Stock No.	Hersteller Manufacturer	Bezeichnung Designation	enthalten in contained in
C213	CE 47UF-10+50% 40V 9X13 ELECTROLYTIC CAPACITOR	CE 006.7142	ROEDERST	EK 00 CB 247 G	
C215	CC 100NF+-10%50V5K1200VIE CAPACITOR	CC 084.5350	UNION CARB	CK05BX104K	
C216	CC 100NF+-10%50V5K1200VIE CAPACITOR	CC 084.5350	UNION CARB	CK05BX104K	
C217	CE 47UF-10+50% 40V 9X13 ELECTROLYTIC CAPACITOR	CE 006.7142	ROEDERST	EK 00 CB 247 G	
C218	CC 100NF+-10%50V5K1200VIE CAPACITOR	CC 084.5350	UNION CARB	CK05BX104K	
C219	CC 100NF+-10%50V5K1200VIE CAPACITOR	CC 084.5350	UNION CARB	CK05BX104K	
C220	CE 100UF-10+50% 16V 9X13 ELECTROLYTIC CAPACITOR	CE 006.7165	ROEDERST	EK 00CB 310 D	
C221	CC 100NF+-10%50V5K1200VIE CAPACITOR	CC 084.5350	UNION CARB	CK05BX104K	
C225	CK 1UF+-10%50V5RM MKT CAPACITOR	CK 099.2998	WIMA	MKS2/50/1UF/10%	
C226	CK 1UF+-10%50V5RM MKT CAPACITOR	CK 099.2998	WIMA	MKS2/50/1UF/10%	
C227	CK 1UF+-10%50V5RM MKT CAPACITOR	CK 099 2998	WIMA	MKS2/50/1UF/10%	
C231	CC 4,7NF+-10%6X9R2000 CAPACITOR	CC 087 7102	VALVO	2222 63051 472	
C232	CC 120PF+-2%6X9NP0 CAPACITOR	CC 087.6558	VALVO	2222 678 10121	
C233	CC 10NF-20+50%7X8R4000 CAPACITOR	CC 087.7525	VALVO	2222 63051 64051103	
C234	CC 120PF+-2%6X9NP0 CAPACITOR	CC 087 6558	VALVO	2222 678 10121	
C235	CC 10NF-20+50%7X8R4000 CAPACITOR	CC 087.7525	VALVO	2222 63051 64051103	
C236	CC 68PF+-2%6X7NP0 CAPACITOR	CC 087 6529	VALVO	2222 678 10689	
C236	NUR VAR/ONLY MOD: 02 CC 120PF+-2%6X9NP0 CAPACITOR	CC 087 6558	VALVO	2222 678 10121	
C237	NUR VAR/ONLY MOD: 04 CC 10NF-20+50%7X8R4000 CAPACITOR	CC 087 7525	VALVO	2222 63051 64051103	
C241 ..246	CC 100NF+-10%50V5K1200VIE CAPACITOR	CC 084.5350	UNION CARB	CK05BX104K	
D11	BL PC74HC245T 8XTRANSC. OCTAL TRANSCEIVER TRIST.	BL 007.3563	VALVO	PC74HC245T	
D12	BL PC74HCT154T 4/16 L.DEC LINE DECODER	BL 007.6391	VALVO	PC74HCT154T	
D13	BL PC74HC14T 6XINV.SCHM HEXINV.SCHMITT-TRIGGER	BL 007.4018	VALVO	PC74HC14T	
D14	BL PC74HC00T 4X2IN.NAND QUAD 2INPUT NAND GATE	BL 007.3463	VALVO	PC74HC00T	
D15	BL PC74HC32T 4X2IN.ORG. QUAD 2INPUT OR GATE	BL 007.3492	VALVO	PC74HC32T	
D16	BL PC74HC161T 4B.BIN.CNT BINARY COUNTER	BL 804.0983	VALVO	PC74HC161T	
D17	BL PC74HC161T 4B.BIN.CNT BINARY COUNTER	BL 804.0983	VALVO	PC74HC161T	
D18	BL PC74HC161T 4B.BIN.CNT BINARY COUNTER	BL 804.0983	VALVO	PC74HC161T	
D19	BL PC74HCT377T 8XD-FF EN OCTAL D-TYPE FLIPFLOP	BL 007.6679	VALVO	PC74HCT377T	
D20	BL PC74HC123T 2XMULTIVIB DUAL MULTIVIBRATOR	BL 007.3528	VALVO	PC74HC123T	
D21	BJ AD7541AKN 12B.DA-CONV D/A-CONVERTER	BJ 356.0467	ANALOG DEV	AD7541AKN	
D31	BJ AD7548KN 12B.DA-CONV D/A CONVERTER	815.8345	ANALOG DEV	AD7548KN	
D32	BJ AD7528KN 2X8B.DA-CONV D/A CONVERTER	377.5916	ANALOG DEV	AD7528KN	
D33	BJ AD7548KN 12B.DA-CONV D/A CONVERTER	815.8345	ANALOG DEV	AD7548KN	
D34	BL PC74HCT377T 8XD-FF EN OCTAL D-TYPE FLIPFLOP	BL 007.6679	VALVO	PC74HCT377T	
D35	BL PC74HC74T 2XD-FF DUAL D-TYPE FLIPFLOP	BL 007.3505	VALVO	PC74HC74T	
D51	BJ LF13331N 4X ANALOGSCH ANALOG SWITCH	BJ 356.0515	NSC	LF13331N	

Diese Unterlage enthalten wir uns alle Rechte vor

Kennz. Comp.No.	Benennung Designation	Sachnummer Stock No.	Hersteller Manufacturer	Bezeichnung Designation	enthalten in contained in
D52	BL PC74HCT377T 8XD-FF EN OCTAL D-TYPE FLIPFLOP	BL 007.6679	VALVO	PC74HCT377T	
D53	BJ LF13331N 4X ANALOGSCH ANALOG SWITCH	BJ 356.0515	NSC	LF13331N	
D54	BJ LF13331N 4X ANALOGSCH ANALOG SWITCH	BJ 356.0515	NSC	LF13331N	
D55	BL PC74HCT377T 8XD-FF EN OCTAL D-TYPE FLIPFLOP	BL 007.6679	VALVO	PC74HCT377T	
L1	LD 100 UH10%8,000HMO,084A CHOKE	LD 067.3101	DELEVAN	DROSSEL1025-68	
L11	LD 4,70UH10%1,200HMO,239A CHOKE	LD 067.2940	DELEVAN	DROSSEL1025-36	
L12	LD 12,0UH10%2,700HMO,160A CHOKE	LD 067.2992	DELEVAN	DROSSEL1025-46	
L13	LD 12,0UH10%2,700HMO,160A CHOKE	LD 067.2992	DELEVAN	DROSSEL1025-46	
L22	LD 4,70UH10%1,200HMO,239A CHOKE	LD 067.2940	DELEVAN	DROSSEL1025-36	
L31	LD 12,0UH10%2,700HMO,160A CHOKE	LD 067.2992	DELEVAN	DROSSEL1025-46	
L32	LD 14UH 0,7 A 0,760HM CHOKE	LD 026.4555	VALVO	4312 020 16260	
L33	LD 10UH 1,5A 0,230HM CHOKE	LD 026.4626	VALVO	4312 020 16340	
L34	LD 14UH 0,7 A 0,760HM CHOKE	LD 026.4555	VALVO	4312 020 16260	
L35	LD 14UH 0,7 A 0,760HM CHOKE	LD 026.4555	VALVO	4312 020 16260	
L36	LD 100 UH10%8,000HMO,084A CHOKE	LD 067.3101	DELEVAN	DROSSEL1025-68	
L37	LD 100 UH10%8,000HMO,084A CHOKE	LD 067.3101	DELEVAN	DROSSEL1025-68	
L38	LD 100 UH10%8,000HMO,084A CHOKE	LD 067.3101	DELEVAN	DROSSEL1025-68	
L39	LD 4,70UH10%1,200HMO,239A CHOKE	LD 067.2940	DELEVAN	DROSSEL1025-36	
L40	LD 100 UH10%8,000HMO,084A CHOKE	LD 067.3101	DELEVAN	DROSSEL1025-68	
N11	BO LF412CN 2XFET OPAMP OPERATIONAL AMPLIFIER	356.0521	NSC	LF412CN	
N12	BO LF412CN 2XFET OPAMP OPERATIONAL AMPLIFIER	356.0521	NSC	LF412CN	
N31	BO OP27GZ LOW N.OPAMP OPERATIONAL AMPLIFIER	BO 393.2599	PMI	OP27GZ	
N32	BO LF412CN 2XFET OPAMP OPERATIONAL AMPLIFIER	356.0521	NSC	LF412CN	
N33	BO NE5532AFE 2XL.N.OPAMP OPERATIONAL AMPLIFIER	BO 356.0450	VALVO	NE5532AFE	
N34	BO OP27GZ LOW N.OPAMP OPERATIONAL AMPLIFIER	BO 393.2599	PMI	OP27GZ	
N36	BO OP27GZ LOW N.OPAMP OPERATIONAL AMPLIFIER	BO 393.2599	PMI	OP27GZ	
N37	BO OP27EZ LOW N.OPAMP OPERATIONAL AMPLIFIER	348.1468	PMI	OP27EZ	
N51	BO LF411ACN JFET OPAMP OPERATIONAL AMPLIFIER	620.0199	NSC	LF411ACN	
N52	BO LF156J BIFET OPAMP OPERATIONAL AMPLIFIER	BO 645.7251	MOTOROLA	LF156J	
N53	BO LF411ACN JFET OPAMP OPERATIONAL AMPLIFIER	620.0199	NSC	LF411ACN	
N54	BO LF156J BIFET OPAMP OPERATIONAL AMPLIFIER	BO 645.7251	MOTOROLA	LF156J	
N55	BO TL074ACD 4XFET OPAMP OPERATIONAL AMPLIFIER	007.7823	TEXAS INST	TL074ACD	
N56	BO OP07CS8 PREC. OPAMP OPERATIONAL AMPLIFIER	007.7781	LINEAR TEC	LT1001CS8	
N57	BO NE5532AFE 2XL.N.OPAMP OPERATIONAL AMPLIFIER	BO 356.0450	VALVO	NE5532AFE	
N58	BO NE5532AFE 2XL.N.OPAMP OPERATIONAL AMPLIFIER	BO 356.0450	VALVO	NE5532AFE	
N59	BO LM358P 2X OPAMP OPERATIONAL AMPLIFIER	BO 377.3813	TEXAS	LM358P	
N60	BO SE5534AFE LOW N.OPAMP OPERATIONAL AMPLIFIER	BO 301.3335	SIGNETICS	SE5534AFE	
N61	BO SE5534AFE LOW N.OPAMP OPERATIONAL AMPLIFIER	BO 301.3335	SIGNETICS	SE5534AFE	

Kennz. Comp.No.	Benennung Designation	Sachnummer Stock No.	Hersteller Manufacturer	Bezeichnung Designation	enthalten in contained in
N71	BO LT1021BCN8-10 VREF VOLTAGE REFERENCE	379.9077	LINEAR TEC	LT1021BCN8-10	
N72	BO OP27GZ LOW N.OPAMP OPERATIONAL AMPLIFIER	BO 393.2599	PMI	OP27GZ	
N73	BO OP27GZ LOW N.OPAMP OPERATIONAL AMPLIFIER	BO 393.2599	PMI	OP27GZ	
N74	BO OP11EY 4XL.N.OPAMP OPERATIONAL AMPLIFIER	377.2769	PMI	OP11EY	
N561	BO OP07CS8 PREC. OPAMP OPERATIONAL AMPLIFIER	007.7781	LINEAR TEC	LT1001CS8	
R1	RL 0,35W 10,0KOHM+-1%TK50 RESISTOR	RL 083.1297	DRALORIC	SMA0207/10K-F-D	
R2	RL 0,35W 4,75KOHM+-1%TK50 RESISTOR	RL 083.1097	DRALORIC	SMA0207/4.75K-F-D	
R3	RL 0,35W 2,21KOHM+-1%TK50 RESISTOR	RL 082.2477	DRALORIC	SMA 0207/2.21K-F-C	
R4	RL 0,35W 4,75KOHM+-1%TK50 RESISTOR	RL 083.1097	DRALORIC	SMA0207/4.75K-F-D	
R10	RN 9X 10KOHM+-SIL10 H5 RESISTOR NETWORK	RN 343.4523	BOURNS	4310R-101-103	
R11 ..18	RL 0,35W 1KOHM+-1%TK50 RESISTOR	RL 082.2160	DRALORIC	SMA0207/1K-F-C	
R21 ..24	RL 0,35W 1KOHM+-1%TK50 RESISTOR	RL 082.2160	DRALORIC	SMA0207/1K-F-C	
R27 ..30	RL 0,35W 1KOHM+-1%TK50 RESISTOR	RL 082.2160	DRALORIC	SMA0207/1K-F-C	
R32	RL 0,35W 1KOHM+-1%TK50 RESISTOR	RL 082.2160	DRALORIC	SMA0207/1K-F-C	
R36	RL 0,35W 1KOHM+-1%TK50 RESISTOR	RL 082.2160	DRALORIC	SMA0207/1K-F-C	
R41	RL 0,35W 10,0KOHM+-1%TK50 RESISTOR	RL 083.1297	DRALORIC	SMA0207/10K-F-D	
R42	RL 0,35W 1,82KOHM+-1%TK50 RESISTOR	RL 082.2277	DRALORIC	SMA0207/1.82K-F-C	
R43	RL 0,35W 1,82KOHM+-1%TK50 RESISTOR	RL 082.2277	DRALORIC	SMA0207/1.82K-F-C	
R45	RL 0,35W 10,0KOHM+-1%TK50 RESISTOR	RL 083.1297	DRALORIC	SMA0207/10K-F-D	
R47	RL 0,35W 3,92KOHM+-1%TK50 RESISTOR	RL 083.1039	RESISTA	MK2	
R48	RL 0,35W 10,0KOHM+-1%TK50 RESISTOR	RL 083.1297	DRALORIC	SMA0207/10K-F-D	
R49	RL 0,35W 10,0KOHM+-1%TK50 RESISTOR	RL 083.1297	DRALORIC	SMA0207/10K-F-D	
R51	RL 0,35W15,0KOHM+-0,1%T25 RESISTOR	RL 084.3406	DRALORIC	SMA0207/15,0K-B-E	
R52	RL 0,35W22,1KOHM+-0,1%T25 RESISTOR	RL 084.3729	DRALORIC	SMA0207	
R53	RL 0,35W 4,32KOHM+-1%TK50 RESISTOR	RL 082.6572	DRALORIC	SMA0207/4,32K-F-D	
R55	RL 0,35W 10,0KOHM+-1%TK50 RESISTOR	RL 083.1297	DRALORIC	SMA0207/10K-F-D	
R56	RL 0,35W 100 OHM+-1%TK50 RESISTOR	RL 082.6543	DRALORIC	SMA0207/100/HM-F-D	
R60	RL 0,35W 100KOHM+-1%TK50 RESISTOR	RL 082.1764	DRALORIC	SMA0207/100K-F-C	
R61	RL 0,35W 150 KOHM+-1%TK50 RESISTOR	RL 083.2129	DRALORIC	SMA/207/150K-F-C	
R62	RL 0,35W 16,2KOHM+-1%TK50 RESISTOR	RL 083.1439	DRALORIC	SMA0207/16,2K-F-D	
R63	RL 0,35W 121 OHM+-1%TK50 RESISTOR	RL 082.9859	DRALORIC	SMA0207/1210HM-F-D	
R65	RL 0,35W 100KOHM+-1%TK50 RESISTOR	RL 082.1764	DRALORIC	SMA0207/100K-F-C	
R66	RL 0,35W 100KOHM+-1%TK50 RESISTOR	RL 082.1764	DRALORIC	SMA0207/100K-F-C	
R70	RL 0,35W 332 KOHM+-1%TK50 RESISTOR	RL 083.2441	DRALORIC	SMA0207/332K-F-C	
R71	RL 0,35W 332 KOHM+-1%TK50 RESISTOR	RL 083.2441	DRALORIC	SMA0207/332K-F-C	
R72 ..75	RL 0,35W 4,75KOHM+-1%TK50 RESISTOR	RL 083.1097	DRALORIC	SMA0207/4,75K-F-D	
R77	RL 0,35W 182 KOHM+-1%TK50 RESISTOR	RL 083.2193	DRALORIC	SMA0207/182K-F-C	
R78	RL 0,35W 681 OHM+-1%TK50 RESISTOR	RL 083.0490	DRALORIC	SMA0207/6810HM-F-D	

...se Unterlage behalten wir ...ns alle Rechte vor

Kennz. Comp.No.	Benennung Designation	Sachnummer Stock No.	Hersteller Manufacturer	Bezeichnung Designation	enthalten in contained in
R79	RL 0,35W 10,0KOHM+-1%TK50 RESISTOR	RL 083.1297	DRALORIC	SMA0207/10K-F-D	
R81	RS 0,3W 500 OHM+-10%CERM. TRIMMING POTENTIOMETER	RS 006.6675	BOURNS	3296W-1- 500OHM+-10%	
R82	RL 0,35W 511 OHM+-1%TK50 RESISTOR	RL 083.0426	DRALORIC	SMA0207/511OHM-F-D	
	NUR VAR/ONLY MOD: 02				
R82	RL 0,35W 182 OHM+-1%TK50 RESISTOR	RL 083.0010	DRALORIC	SMA0207/182OHM-F-D	
	NUR VAR/ONLY MOD: 04				
R83	RL 0,35W2,74KOHM+-0,1%T25 RESISTOR	RL 083.9981	DRALORIC	SMA0207	
	NUR VAR/ONLY MOD: 02				
R83	RL 0,35W 3,32KOHM+-1%TK50 RESISTOR	RL 083.0990	DRALORIC	SMA0207/3,32K-F-D	
	NUR VAR/ONLY MOD: 04				
R85	RL 0,35W 22,1KOHM+-1%TK50 RESISTOR	RL 083.1545	DRALORIC	SMA/207/22,1K-F-C	
R86	RL 0,35W 22,1KOHM+-1%TK50 RESISTOR	RL 083.1545	DRALORIC	SMA/207/22,1K-F-C	
R87	RL 0,35W 3,32KOHM+-1%TK50 RESISTOR	RL 083.0990	DRALORIC	SMA0207/3,32K-F-D	
R88	RL 0,35W 82,5KOHM+-1%TK50 RESISTOR	RL 082.2302	DRALORIC	SMA0207/82,5K-F-C	
	NUR VAR/ONLY MOD: 02				
R88	RL 0,35W 110 KOHM+-1%TK50 RESISTOR	RL 083.2041	DRALORIC	SMA0207/110K-F-C	
	NUR VAR/ONLY MOD: 04				
R89	RL 0,35W 3,32KOHM+-1%TK50 RESISTOR	RL 083.0990	DRALORIC	SMA0207/3,32K-F-D	
R91	RL 0,35W 10,0KOHM+-1%TK50 RESISTOR	RL 083.1297	DRALORIC	SMA0207/10K-F-D	
R92	RS 0,3W 200 OHM+-10%CERM. TRIMMING POTENTIOMETER	RS 006.6669	BOURNS	3296W-1- 200OHM+-10%	
R93	RL 0,35W 150 OHM+-1%TK50 RESISTOR	RL 082.9942	DRALORIC	SMA0207/150OHM-F-D	
R94	RL 0,35W1,50KOHM+-0,1%T25 RESISTOR	RL 083.9481	DRALORIC	SMA0207/1.5K-B-E	
	NUR VAR/ONLY MOD: 02				
R94	RL 0,35W 1,62KOHM+-1%TK50 RESISTOR	RL 083.0755	DRALORIC	SMA0207/1,62K-F-D	
	NUR VAR/ONLY MOD: 04				
R95	RL 0,35W 16,2KOHM+-1%TK50 RESISTOR	RL 083.1439	DRALORIC	SMA0207/16,2K-F-D	
	NUR VAR/ONLY MOD: 02				
R95	RL 0,35W 2,00KOHM+-1%TK50 RESISTOR	RL 083.0826	DRALORIC	SMA0207/2,00K-F-D	
	NUR VAR/ONLY MOD: 04				
R96	RL 0,35W 130 KOHM+-1%TK50 RESISTOR	RL 083.2093	DRALORIC	SMA0207/130K-F-C	
	NUR VAR/ONLY MOD: 02				
R96	RL 0,35W 75,0KOHM+-1%TK50 RESISTOR	RL 083.1916	DRALORIC	SMA/207/75K-F-C	
	NUR VAR/ONLY MOD: 04				
R97	RL 0,35W 18,2KOHM+-1%TK50 RESISTOR	RL 083.1480	DRALORIC	SMA/207/18,2K-F-C	
	NUR VAR/ONLY MOD: 02				
R97	RL 0,35W 3,92KOHM+-1%TK50 RESISTOR	RL 083.1039	RESISTA	MK2	
	NUR VAR/ONLY MOD: 04				
R98	RL 0,35W 274 KOHM+-1%TK50 RESISTOR	RL 083.2364	DRALORIC	SMA/207/274K-F-C	
	NUR VAR/ONLY MOD: 02				
R98	RL 0,35W 150 KOHM+-1%TK50 RESISTOR	RL 083.2129	DRALORIC	SMA/207/150K-F-C	
	NUR VAR/ONLY MOD: 04				
R99	RL 0,35W 22,1KOHM+-1%TK50 RESISTOR	RL 083.1545	DRALORIC	SMA/207/22,1K-F-C	
R100	RL 0,35W 332 KOHM+-1%TK50 RESISTOR	RL 083.2441	DRALORIC	SMA0207/332K-F-C	
R101	RL 0,35W 332 KOHM+-1%TK50 RESISTOR	RL 083.2441	DRALORIC	SMA0207/332K-F-C	
R102	RL 0,35W 100KOHM+-1%TK50 RESISTOR	RL 082.1764	DRALORIC	SMA0207/100K-F-C	
R103	RL 0,35W 100KOHM+-1%TK50 RESISTOR	RL 082.1764	DRALORIC	SMA0207/100K-F-C	
R104	RL 0,35W 10,0KOHM+-1%TK50 RESISTOR	RL 083.1297	DRALORIC	SMA0207/10K-F-D	

Kennz. Comp.No.	Benennung Designation	Sachnummer Stock No.	Hersteller Manufacturer	Bezeichnung Designation	enthalten in contained in
R105	RL 0,35W 16,2KOHM+-1%TK50 RESISTOR NUR VAR/ONLY MOD: 02	RL 083.1439	DRALORIC	SMA0207/16,2K-F-D	
R105	RL 0,35W 2,00KOHM+-1%TK50 RESISTOR NUR VAR/ONLY MOD: 04	RL 083.0826	DRALORIC	SMA0207/2,00K-F-D	
R106	RL 0,35W 130 KOHM+-1%TK50 RESISTOR NUR VAR/ONLY MOD: 02	RL 083.2093	DRALORIC	SMA0207/130K-F-C	
R106	RL 0,35W 75,0KOHM+-1%TK50 RESISTOR NUR VAR/ONLY MOD: 04	RL 083.1916	DRALORIC	SMA/207/75K-F-C	
R107	RL 0,35W 18,2KOHM+-1%TK50 RESISTOR NUR VAR/ONLY MOD: 02	RL 083.1480	DRALORIC	SMA/207/18,2K-F-C	
R107	RL 0,35W 3,92KOHM+-1%TK50 RESISTOR NUR VAR/ONLY MOD: 04	RL 083.1039	RESISTA	MK2	
R108	RL 0,35W 274 KOHM+-1%TK50 RESISTOR NUR VAR/ONLY MOD: 02	RL 083.2364	DRALORIC	SMA/207/274K-F-C	
R108	RL 0,35W 150 KOHM+-1%TK50 RESISTOR NUR VAR/ONLY MOD: 04	RL 083.2129	DRALORIC	SMA/207/150K-F-C	
R109	RS 0,3W 500 OHM+-10%CERM. TRIMMING POTENTIOMETER	RS 006.6675	BOURNS	3296W-1- 500OHM+-10%	
R110	RL 0,35W 475 OHM+-1%TK50 RESISTOR	RL 083.0390	DRALORIC	SMA0207/475OHM-F-D	
R111	RL 0,35W2,74KOHM+-0,1%T25 RESISTOR	RL 083 9981	DRALORIC	SMA0207	
R113	TRIMMWERT / SELECTED NUR VAR/ONLY MOD: 02 RL 0083.1400 ODER/OR RL 0082.2348				
R113	RL 0,35W 18,2KOHM+-1%TK50 RESISTOR NUR VAR/ONLY MOD: 04 TRIMMWERT	RL 083.1480	DRALORIC	SMA/207/18,2K-F-C	
R114	RL 0,35W909 OHM+-0,1%TK25 RESISTOR NUR VAR/ONLY MOD: 02	RL 083 9069	DRALORIC	SMA/207/909OHM-B-E	
R114	RL 0,35W 1,50KOHM+-1%TK50 RESISTOR NUR VAR/ONLY MOD: 04	RL 083.0732	DRALORIC	SMA0207/1,50K-F-D	
R115	RL 0,35W 1,50KOHM+-1%TK50 RESISTOR	RL 083.0732	DRALORIC	SMA0207/1,50K-F-D	
R117	RL 0,35W 332 KOHM+-1%TK50 RESISTOR	RL 083.2441	DRALORIC	SMA0207/332K-F-C	
R118	RL 0,35W 100KOHM+-1%TK50 RESISTOR	RL 082.1764	DRALORIC	SMA0207/100K-F-C	
R119	RL 0,35W 332 KOHM+-1%TK50 RESISTOR	RL 083.2441	DRALORIC	SMA0207/332K-F-C	
R120	RL 0,35W 100KOHM+-1%TK50 RESISTOR	RL 082.1764	DRALORIC	SMA0207/100K-F-C	
R122	RL 0,35W 100KOHM+-1%TK50 RESISTOR	RL 082.1764	DRALORIC	SMA0207/100K-F-C	
R125	RL 0,35W 10,0KOHM+-1%TK50 RESISTOR	RL 083.1297	DRALORIC	SMA0207/10K-F-D	
R126	RL 0,35W 10,0KOHM+-1%TK50 RESISTOR	RL 083.1297	DRALORIC	SMA0207/10K-F-D	
R127	RL 0,35W 332 KOHM+-1%TK50 RESISTOR	RL 083.2441	DRALORIC	SMA0207/332K-F-C	
R128	RL 0,35W 10,0KOHM+-1%TK50 RESISTOR	RL 083.1297	DRALORIC	SMA0207/10K-F-D	
R131	RL 0,35W 1MOHM+-1%TK50 RESISTOR	RL 082.7862	DRALORIC	SMA0207/1M-F-D	
R132	RL 0,35W 27,4KOHM+-1%TK50 RESISTOR	RL 082.2583	DRALORIC	SMA 0207/27,4K-F-C	
R133	RL 0,35W 5,62KOHM+-1%TK50 RESISTOR	RL 082.2190	DRALORIC	SMA0207/5,62K-F-C	
R135	RL 0,35W 332 OHM+-1%TK50 RESISTOR	RL 083.0255	DRALORIC	SMA0207/332OHM-F-D	
R136	RL 0,35W 1KOHM+-1%TK50 RESISTOR	RL 082.2160	DRALORIC	SMA0207/1K-F-C	
R137	RS 0,5W2KOHM+-10%10X10X5 CERMET POTENTIOMETER	RS 247.7961	BOURNS	3386X-1-202	
R138	RL 0,35W 10,0KOHM+-1%TK50 RESISTOR	RL 083.1297	DRALORIC	SMA0207/10K-F-D	

...e Unterlage behalten wir ...s alle Rechte vor

Kennz. Comp.No.	Benennung Designation	Sachnummer Stock No.	Hersteller Manufacturer	Bezeichnung Designation	enthalten in contained in
R139	RS 0,5W50KOHM+-10%10X10X5 CERMET POTENTIOMETER T	RS 087.7677	BOURNS	3386-1-503	
R141	RD 10W8,250HM+-1%TK2 TO3 WIRE WOUND RESISTOR NUR VAR/ONLY MOD: 02	848.6558	VISHAY	VHP-3 8,25 OHM 1%	
R141	RD 10W 36R +-1% TK2,5 TO3 POWER RESISTOR NUR VAR/ONLY MOD: 04	848.6564	VISHAY	VHP-3 36 OHM 1%	
R143	RL 0,35W 1KOHM+-1%TK50 RESISTOR	RL 082.2160	DRALORIC	SMA0207/1K-F-C	
R144	RL 0,35W 33,2 OHM+-1%TK50 RESISTOR	RL 082.9359	DRALORIC	SMA0207/33,2OHM-F-D	
R145	RL 0,35W 1,30KOHM+-1%TK50 RESISTOR	RL 083.0678	DRALORIC	SMA0207/1,30K-F-D	
R146	RL 0,35W 1,30KOHM+-1%TK50 RESISTOR	RL 083.0678	DRALORIC	SMA0207/1,30K-F-D	
R148	RL 0,35W 10,0KOHM+-1%TK50 RESISTOR	RL 083.1297	DRALORIC	SMA0207/10K-F-D	
R149	RL 0,35W 82,5 OHM+-1%TK50 RESISTOR	RL 082.9707	DRALORIC	SMA0207/82,5OHM-F-D	
R161	RL 0,35W 562 OHM+-1%TK50 RESISTOR	RL 083.0461	DRALORIC	SMA0207/562OHM-F-D	
R162	RL 0,35W 562 OHM+-1%TK50 RESISTOR	RL 083.0461	DRALORIC	SMA0207/562OHM-F-D	
R163	RL 0,35W 3,01KOHM+-1%TK50 RESISTOR	RL 083.0961	DRALORIC	SMA0207/3,01K-F-D	
R164	RL 0,35W 1,50KOHM+-1%TK50 RESISTOR	RL 083.0732	DRALORIC	SMA0207/1,50K-F-D	
R165	RL 0,35W 1,50KOHM+-1%TK50 RESISTOR	RL 083.0732	DRALORIC	SMA0207/1,50K-F-D	
R166	RL 0,35W 22,1KOHM+-1%TK50 RESISTOR	RL 083.1545	DRALORIC	SMA/207/22,1K-F-C	
R167	RL 0,35W 332 OHM+-1%TK50 RESISTOR	RL 083.0255	DRALORIC	SMA0207/332OHM-F-D	
R168	RL 0,35W 332 OHM+-1%TK50 RESISTOR	RL 083.0255	DRALORIC	SMA0207/332OHM-F-D	
R171	RL 0,35W 562 OHM+-1%TK50 RESISTOR	RL 083.0461	DRALORIC	SMA0207/562OHM-F-D	
R172	RL 0,35W 562 OHM+-1%TK50 RESISTOR	RL 083.0461	DRALORIC	SMA0207/562OHM-F-D	
R173	RL 0,35W 3,01KOHM+-1%TK50 RESISTOR	RL 083.0961	DRALORIC	SMA0207/3,01K-F-D	
R174	RL 0,35W 1,50KOHM+-1%TK50 RESISTOR	RL 083.0732	DRALORIC	SMA0207/1,50K-F-D	
R175	RL 0,35W 1,50KOHM+-1%TK50 RESISTOR	RL 083.0732	DRALORIC	SMA0207/1,50K-F-D	
R176	RL 0,35W 22,1KOHM+-1%TK50 RESISTOR	RL 083.1545	DRALORIC	SMA/207/22,1K-F-C	
R177	RL 0,35W 332 OHM+-1%TK50 RESISTOR	RL 083.0255	DRALORIC	SMA0207/332OHM-F-D	
R178	RL 0,35W 332 OHM+-1%TK50 RESISTOR	RL 083.0255	DRALORIC	SMA0207/332OHM-F-D	
R181	RL 0,35W 22,1KOHM+-1%TK50 RESISTOR	RL 083.1545	DRALORIC	SMA/207/22,1K-F-C	
R182	RL 0,35W 1KOHM+-1%TK50 RESISTOR	RL 082.2160	DRALORIC	SMA0207/1K-F-C	
R183	RS 0,3W 50KOHM+-10%CERMET TRIMMING POTENTIOMETER	RS 006.6700	BOURNS	3296W-1- 50KOHM+-10%	
R185	RL 0,35W 75,0 OHM+-1%TK50 RESISTOR	RL 082.9665	DRALORIC	SMA0207/75OHM-F-D	
R191	RL 0,35W 22,1KOHM+-1%TK50 RESISTOR	RL 083.1545	DRALORIC	SMA/207/22,1K-F-C	
R192	RL 0,35W 1KOHM+-1%TK50 RESISTOR	RL 082.2160	DRALORIC	SMA0207/1K-F-C	
R193	RS 0,3W 50KOHM+-10%CERMET TRIMMING POTENTIOMETER	RS 006.6700	BOURNS	3296W-1- 50KOHM+-10%	
R195	RL 0,35W 75,0 OHM+-1%TK50 RESISTOR	RL 082.9665	DRALORIC	SMA0207/75OHM-F-D	
R201	RL 0,35W 4,75KOHM+-1%TK50 RESISTOR	RL 083.1097	DRALORIC	SMA0207/4,75K-F-D	
R202	RL 0,35W 47,5 OHM+-1%TK50 RESISTOR	RL 082.9507	DRALORIC	SMA0207/47,5OHM-F-D	
R203	RL 0,35W 75,0KOHM+-1%TK50 RESISTOR	RL 083.1916	DRALORIC	SMA/207/75K-F-C	
R204	RL 0,35W 121KOHM+-1%TK50 RESISTOR	RL 083.2070	DRALORIC	SMA/207/121K-F-C	
R205	RL 0,35W 47,5KOHM+-1%TK50 RESISTOR	RL 083.1800	DRALORIC	SMA/207/47,5K-F-C	

Kennz. Comp.No.	Benennung Designation	Sachnummer Stock No.	Hersteller Manufacturer	Bezeichnung Designation	enthalten in contained in
R206	RL 0,35W 47,5KOHM+-1%TK50 RESISTOR	RL 083.1800	DRALORIC	SMA/207/47,5K-F-C	
R207	RL 0,35W 47,5KOHM+-1%TK50 RESISTOR	RL 083.1800	DRALORIC	SMA/207/47,5K-F-C	
R208	RL 0,35W 130 KOHM+-1%TK50 RESISTOR	RL 083.2093	DRALORIC	SMA0207/130K-F-C	
R209	RL 0,35W 162KOHM+-1%TK50 RESISTOR	RL 082.2154	DRALORIC	SMA0207/162K-F-C	
R210	RL 0,35W 4,75KOHM+-1%TK50 RESISTOR	RL 083.1097	DRALORIC	SMA0207/4,75K-F-D	
R212	RL 0,35W 221 KOHM+-1%TK50 RESISTOR	RL 083.2270	DRALORIC	SMA0207/221K-F-C	
R213	RL 0,35W 1MOHM+-1%TK50 RESISTOR	RL 082.7862	DRALORIC	SMA0207/1M-F-D	
R214	RL 0,35W 100KOHM+-1%TK50 RESISTOR	RL 082.1764	DRALORIC	SMA0207/100K-F-C	
R215	RL 0,35W 100KOHM+-1%TK50 RESISTOR	RL 082.1764	DRALORIC	SMA0207/100K-F-C	
R216	RL 0,35W 100KOHM+-1%TK50 RESISTOR	RL 082.1764	DRALORIC	SMA0207/100K-F-C	
R217	RL 0,35W 47,5 OHM+-1%TK50 RESISTOR	RL 082.9507	DRALORIC	SMA0207/47,5OHM-F-D	
R218	RL 0,35W 47,5KOHM+-1%TK50 RESISTOR	RL 083.1800	DRALORIC	SMA/207/47,5K-F-C	
R219	RL 0,35W 47,5KOHM+-1%TK50 RESISTOR	RL 083.1800	DRALORIC	SMA/207/47,5K-F-C	
R220	RL 0,35W 47,5KOHM+-1%TK50 RESISTOR	RL 083.1800	DRALORIC	SMA/207/47,5K-F-C	
R221	RL 0,35W 3,32KOHM+-1%TK50 RESISTOR	RL 083.0990	DRALORIC	SMA0207/3,32K-F-D	
R226 . 229	RL 0,35W 3,32KOHM+-1%TK50 RESISTOR	RL 083.0990	DRALORIC	SMA0207/3,32K-F-D	
R231	RL 0,35W 3,92KOHM+-1%TK50 RESISTOR	RL 083.1039	RESISTA	MK2	
R232	RL 0,35W 2,21KOHM+-1%TK50 RESISTOR	RL 082.2477	DRALORIC	SMA 0207/2,21K-F-C	
R233	RL 0,35W 5,11KOHM+-1%TK50 RESISTOR	RL 082.2348	DRALORIC	SMA0207/5,11K-F-C	
R234	RL 0,35W 2,21KOHM+-1%TK50 RESISTOR	RL 082.2477	DRALORIC	SMA 0207/2,21K-F-C	
R235	RS 0,3W 500 OHM+-10%CERM. TRIMMING POTENTIOMETER	RS 006.6675	BOURNS	3296W-1- 500OHM+-10%	
R236	RL 0,35W 4,32KOHM+-1%TK50 RESISTOR	RL 082.6572	DRALORIC	SMA0207/4,32K-F-D	
R241	RL 0,35W 221 KOHM+-1%TK50 RESISTOR	RL 083.2270	DRALORIC	SMA0207/221K-F-C	
R242	RL 0,35W 2,00KOHM+-1%TK50 RESISTOR	RL 083.0826	DRALORIC	SMA0207/2,00K-F-D	
R243	RS 0,5W5KOHM+-10%10X10X5 CERMET POTENTIOMETER T	RS 247.7890	BOURNS	3386F-1-502	
R244	RL 0,35W 9,09KOHM+-1%TK50 RESISTOR	RL 082.2177	DRALORIC	SMA0207/9,09K-F-C	
R245	RS 0,5W2KOHM+-10%10X10X5 CERMET POTENTIOMETER T	RS 247.7884	BOURNS	3386F-1-202	
R246	RL 0,35W 3,92KOHM+-1%TK50 RESISTOR	RL 083.1039	RESISTA	MK2	
R247	RL 0,35W 1MOHM+-1%TK50 RESISTOR	RL 082.7862	DRALORIC	SMA0207/1M-F-D	
R251	RL 0,35W 332 OHM+-1%TK50 RESISTOR	RL 083.0255	DRALORIC	SMA0207/332OHM-F-D	
R252	RL 0,35W 4,75KOHM+-1%TK50 RESISTOR	RL 083.1097	DRALORIC	SMA0207/4,75K-F-D	
R255	RL 0,35W 475 OHM+-1%TK50 RESISTOR	RL 083.0390	DRALORIC	SMA0207/475OHM-F-D	
R256	RS 0,5W2KOHM+-10%10X10X5 CERMET POTENTIOMETER	RS 247.7961	BOURNS	3386X-1-202	
R257	RL 0,35W 221 OHM+-1%TK50 RESISTOR	RL 083.0084	DRALORIC	SMA0207/221OHM-F-D	
R258	RS 0,5W500 OHM+-10%10X10X CERMET POTENTIOMETER	RS 247.7955	BOURNS	3386X-1-501	
R259	RL 0,35W 1,82KOHM+-1%TK50 RESISTOR	RL 082.2277	DRALORIC	SMA0207/1,82K-F-C	
R261	RL 0,35W 1,82KOHM+-1%TK50 RESISTOR	RL 082.2277	DRALORIC	SMA0207/1,82K-F-C	
R262	RL 0,35W 1,30KOHM+-1%TK50 RESISTOR	RL 083.0678	DRALORIC	SMA0207/1,30K-F-D	
R263	RL 0,35W 33,2KOHM+-1%TK50 RESISTOR	RL 083.1674	DRALORIC	SMA0207/33,2K-F-C	

...d Unterlage behalten wir ...s alle Rechte vor

Kennz. Comp.No.	Benennung Designation	Sachnummer Stock No.	Hersteller Manufacturer	Bezeichnung Designation	enthalten in contained in
R264	RL 0,35W 100 OHM+-1%TK50 RESISTOR	RL 082.6543	DRALORIC	SMA0207/100/HM-F-D	
R265	RL 0,35W 100 OHM+-1%TK50 RESISTOR	RL 082.6543	DRALORIC	SMA0207/100/HM-F-D	
R266	RL 0,35W 100 OHM+-1%TK50 RESISTOR	RL 082.6543	DRALORIC	SMA0207/100/HM-F-D	
R267	RL 0,35W 1,30KOHM+-1%TK50 RESISTOR	RL 083.0678	DRALORIC	SMA0207/1,30K-F-D	
R271	RL 0,35W 82,5 OHM+-1%TK50 RESISTOR	RL 082.9707	DRALORIC	SMA0207/82,5OHM-F-D	
R272	RL 0,35W 82,5 OHM+-1%TK50 RESISTOR	RL 082.9707	DRALORIC	SMA0207/82,5OHM-F-D	
R273	RD 10W 50 OHM+-1% GEH. RESISTOR	RD 297.4908	SAGE	3010NMB-500HM +-1%	
R274	RL 0,35W 82,5 OHM+-1%TK50 RESISTOR	RL 082.9707	DRALORIC	SMA0207/82,5OHM-F-D	
R275	RL 0,35W 82,5 OHM+-1%TK50 RESISTOR	RL 082.9707	DRALORIC	SMA0207/82,5OHM-F-D	
R281	RL 0,35W 10,0KOHM+-1%TK50 RESISTOR	RL 083.1297	DRALORIC	SMA0207/10K-F-D	
R282	RL 0,35W 3,57KOHM+-1%TK50 RESISTOR	RL 083.1022	DRALORIC	SMA0207/3,57K-F-D	
R283	RS 0,3W2,0KOHM+-10%CERMET TRIMMING POTENTIOMETER	RS 006.9139	BECKMAN	67W 2KOHM 10%	
R284	RL 0,35W 1,50KOHM+-1%TK50 RESISTOR	RL 083.0732	DRALORIC	SMA0207/1,50K-F-D	
R286	RL 0,35W6,81 OHM+-1%TK50 METALFILMRESISTOR	RL 099.8067	RESISTA	MK2 6,81 OHM 1% TK50	
R301	RL 0,35W 10,0 OHM+-1%TK50 RESISTOR	RL 082.8852	DRALORIC	SMA0207/100HM-F-D	
R303	RL 0,35W 82,5KOHM+-1%TK50 RESISTOR	RL 082.2302	DRALORIC	SMA0207/82,5K-F-C	
R304	RL 0,35W10,0KOHM+-0,1%T25 RESISTOR	RL 084.3064	DRALORIC	SMA0207/10K-B-E	
R305	RL 0,35W10,0KOHM+-0,1%T25 RESISTOR	RL 084.3064	DRALORIC	SMA0207/10K-B-E	
R311	RS 0,5W1MOHM+-10%10X10X5 CERMET POTENTIOMETER T NICHT BESTUECKT	RS 087.7602	BOURNS	3386F-1-105	
R312	RL 0,35W4,75MOHM+-1%TK50 METALFILMRESISTOR NICHT BESTUECKT	RL 099.8250	RESISTA	MK2 4,75MOHM 1% TK50	
R313	RS 0,3W 500 OHM+-10%CERM. TRIMMING POTENTIOMETER NUR VAR/ONLY MOD: 02	RS 006.6675	BOURNS	3296W-1- 500OHM+-10%	
R313	RS 0,3W 1KOHM+-10%CERMET TRIMMING POTENTIOMETER NUR VAR/ONLY MOD: 04	RS 006.6681	BOURNS	3296W-1- 1KOHM+-10%	
R314	RL 0,35W 9,09KOHM+-1%TK50 RESISTOR NUR VAR/ONLY MOD: 02	RL 082.2177	DRALORIC	SMA0207/9,09K-F-C	
R314	RL 0,35W 8,25KOHM+-1%TK50 RESISTOR NUR VAR/ONLY MOD: 04	RL 083.1239	DRALORIC	SMA0207/8,25K-F-D	
R321	RL 0,35W 10,0KOHM+-1%TK50 RESISTOR	RL 083.1297	DRALORIC	SMA0207/10K-F-D	
R323	RL 0,35W 10,0KOHM+-1%TK50 RESISTOR	RL 083.1297	DRALORIC	SMA0207/10K-F-D	
R324	RL 0,35W 221 OHM+-1%TK50 RESISTOR	RL 083.0084	DRALORIC	SMA0207/221OHM-F-D	
R325	RL 0,35W 10,0KOHM+-1%TK50 RESISTOR	RL 083.1297	DRALORIC	SMA0207/10K-F-D	
R328	RL 0,35W 10,0KOHM+-1%TK50 RESISTOR	RL 083.1297	DRALORIC	SMA0207/10K-F-D	
R329	RL 0,35W 221 OHM+-1%TK50 RESISTOR	RL 083.0084	DRALORIC	SMA0207/221OHM-F-D	
R330	RL 0,35W 10,0KOHM+-1%TK50 RESISTOR	RL 083.1297	DRALORIC	SMA0207/10K-F-D	
R332	RL 0,35W 6,81KOHM+-1%TK50 RESISTOR NUR VAR/ONLY MOD: 02	RL 082.2560	DRALORIC	SMA 0207/6,81K-F-C	
R332	RL 0,35W 4,75KOHM+-1%TK50 RESISTOR NUR VAR/ONLY MOD: 04	RL 083.1097	DRALORIC	SMA0207/4,75K-F-D	
R333	RL 0,35W 5,62KOHM+-1%TK50 RESISTOR NUR VAR/ONLY MOD: 02	RL 082.2190	DRALORIC	SMA0207/5,62K-F-C	

Kennz. Comp.No.	Benennung Designation	Sachnummer Stock No.	Hersteller Manufacturer	Bezeichnung Designation	enthalten in contained in
R335	RL 0,35W 221 OHM+-1%TK50 RESISTOR	RL 083.0084	DRALORIC	SMA0207/221OHM-F-D	
R336	RL 0,35W 18,2KOHM+-1%TK50 RESISTOR NUR VAR/ONLY MOD: 02	RL 083.1480	DRALORIC	SMA/207/18,2K-F-C	
R336	RL 0,35W 4,75KOHM+-1%TK50 RESISTOR NUR VAR/ONLY MOD: 04	RL 083.1097	DRALORIC	SMA0207/4,75K-F-D	
R337	RL 0,35W 10,0KOHM+-1%TK50 RESISTOR NUR VAR/ONLY MOD: 02	RL 083.1297	DRALORIC	SMA0207/10K-F-D	
R338	RS 0,3W 500 OHM+-10%CERM. TRIMMING POTENTIOMETER NUR VAR/ONLY MOD: 02	RS 006.6675	BOURNS	3296W-1- 500OHM+-10%	
R341	RL 0,35W 432 KOHM+-1%TK50 RESISTOR NUR VAR/ONLY MOD: 02	RL 083.2558	DRALORIC	SMA0207/432K-F-C	
R341	RL 0,35W 162KOHM+-1%TK50 RESISTOR NUR VAR/ONLY MOD: 04	RL 082.2154	DRALORIC	SMA0207/162K-F-C	
R342	RL 0,35W 56,2KOHM+-1%TK50 RESISTOR NUR VAR/ONLY MOD: 02	RL 082.2231	DRALORIC	SMA0207/56,2K-F-C	
R342	RL 0,35W 13,0KOHM+-1%TK50 RESISTOR NUR VAR/ONLY MOD: 04	RL 083.1368	DRALORIC	SMA0207/13,0K-F-D	
R343	RL 0,35W 4,75KOHM+-1%TK50 RESISTOR	RL 083.1097	DRALORIC	SMA0207/4,75K-F-D	
R345	RS 0,3W 200 OHM+-10%CERM. TRIMMING POTENTIOMETER	RS 006.6669	BOURNS	3296W-1- 200OHM+-10%	
R346	RL 0,35W 681 OHM+-1%TK50 RESISTOR NUR VAR/ONLY MOD: 02	RL 083.0490	DRALORIC	SMA0207/681OHM-F-D	
R346	RL 0,35W 51,1 OHM+-1%TK50 RESISTOR NUR VAR/ONLY MOD: 04	RL 082.9536	DRALORIC	SMA0207/51,1OHM-F-D	
R347	RL 0,35W 3,92KOHM+-1%TK50 RESISTOR NUR VAR/ONLY MOD: 02	RL 083.1039	RESISTA	MK2	
R347	RL 0,35W 4,32KOHM+-1%TK50 RESISTOR NUR VAR/ONLY MOD: 04	RL 082.6572	DRALORIC	SMA0207/4,32K-F-D	
R351	RL 0,35W 1MOHM+-1%TK50 RESISTOR	RL 082.7862	DRALORIC	SMA0207/1M-F-D	
R352	RL 0,35W 5,62KOHM+-1%TK50 RESISTOR	RL 082.2190	DRALORIC	SMA0207/5,62K-F-C	
R353	RL 0,35W 27,4KOHM+-1%TK50 RESISTOR	RL 082.2583	DRALORIC	SMA 0207/27,4K-F-C	
V11	BJ SD5000N 4X ANALOGSCH BJ SD5000N 4XANALOGSWITCH	BJ 342.2340	SILICONIX	SD5000N	
V12	AK BC550B N 50V 100MA TRANSISTOR	AK 007.2050	SIEMENS	BC550B GURT,POL.CBE	
V13	AK BC550B N 50V 100MA TRANSISTOR	AK 007.2050	SIEMENS	BC550B GURT,POL.CBE	
V14 ..17	AK BC337-40 N 45V 800MA TRANSISTOR	AK 815.7684	VALVO	BC337-40GEGURTET	
V18	AD 1N4448 75V 0A15 UDI DIODE	AD 012.0700	TEXAS INST	1N4448 GEGURTET	
V19	AD 1N4448 75V 0A15 UDI DIODE	AD 012.0700	TEXAS INST	1N4448 GEGURTET	
V20	AD 1N4448 75V 0A15 UDI DIODE	AD 012.0700	TEXAS INST	1N4448 GEGURTET	
V21	AE 5082-2800 SCHOTTKY DIODE	AE 012.9066	HEWLETT-P.	5082-2800	
V28	AD 1N4448 75V 0A15 UDI DIODE	AD 012.0700	TEXAS INST	1N4448 GEGURTET	
V29	AD 1N4448 75V 0A15 UDI DIODE	AD 012.0700	TEXAS INST	1N4448 GEGURTET	
V30	AM BST70A N-D 80V MOSF MOS-FET	823.1769	VALVO	BST70A	
V31	BJ SD5000N 4X ANALOGSCH BJ SD5000N 4XANALOGSWITCH	BJ 342.2340	SILICONIX	SD5000N	
V32 ..35	AK BC550B N 50V 100MA TRANSISTOR	AK 007.2050	SIEMENS	BC550B GURT,POL.CBE	
V37	AD 1N4448 75V 0A15 UDI DIODE	AD 012.0700	TEXAS INST	1N4448 GEGURTET	

Für Unterlage behalten wir alle Rechte vor

Kennz. Comp.No.	Benennung Designation	Sachnummer Stock No.	Hersteller Manufacturer	Bezeichnung Designation	enthalten in contained in
V38	AM J111A N-D 35V JFET FET	AM 007.2038	SILICONIX	J111A GEGURTET AMMOP	
V39	AK BC560B P 45V 100MA TRANSISTOR	AK 007.2044	SIEMENS	BC560B GURT,POL.CBE	
V41	AM VN66AD N-E 60V MOSF POWER MOSF	336.4215	SILICONIX	VN66AD	
V42	AD BAV10 60V 0A3 UDI DIODE	AD 012.9437	VALVO	BAV10	
V43	AE BZT03/C33 3.2W ZDI ZENER DIODE	AE 007.4260	VALVO	BZT03/C33	
V45	AG MAC97A-4 TRIAC 200V.6A TRIAC 200V 0.6A	806.9036	MOTOROLA	MAC97A-4	
V46	AD 1N4448 75V 0A15 UDI DIODE	AD 012.0700	TEXAS INST	1N4448 GEGURTET	
V47	AD 1N4448 75V 0A15 UDI DIODE	AD 012.0700	TEXAS INST	1N4448 GEGURTET	
V48	AK 2N2222A N 40V 800MA TRANSISTOR	AK 010.5405	VALVO	2N2222A	
V51	AK BC560B P 45V 100MA TRANSISTOR	AK 007.2044	SIEMENS	BC560B GURT,POL.CBE	
V52	AK BC550B N 50V 100MA TRANSISTOR	AK 007.2050	SIEMENS	BC550B GURT,POL.CBE	
V53	AK BC550B N 50V 100MA TRANSISTOR	AK 007.2050	SIEMENS	BC550B GURT,POL.CBE	
V54	AK BC550B N 50V 100MA TRANSISTOR	AK 007.2050	SIEMENS	BC550B GURT,POL.CBE	
V55	AD 1N4448 75V 0A15 UDI DIODE	AD 012.0700	TEXAS INST	1N4448 GEGURTET	
V56	AE BAV45 35V PICOAMPDI LOW LEAKAGE DIODE	AE 252.5386	VALVO	BAV45	
V57	AE BAV45 35V PICOAMPDI LOW LEAKAGE DIODE	AE 252.5386	VALVO	BAV45	
V58	AM 2N4117S N-D 40V JFET FET	248.2486	INTERSIL	2N4117/R&S-LV	
V59	AM 2N4117S N-D 40V JFET FET	248.2486	INTERSIL	2N4117/R&S-LV	
V61	AK BC560B P 45V 100MA TRANSISTOR	AK 007.2044	SIEMENS	BC560B GURT,POL.CBE	
V62	AK BC550B N 50V 100MA TRANSISTOR	AK 007.2050	SIEMENS	BC550B GURT,POL.CBE	
V63	AK BC550B N 50V 100MA TRANSISTOR	AK 007.2050	SIEMENS	BC550B GURT,POL.CBE	
V64	AK BC550B N 50V 100MA TRANSISTOR	AK 007.2050	SIEMENS	BC550B GURT,POL.CBE	
V65	AD 1N4448 75V 0A15 UDI DIODE	AD 012.0700	TEXAS INST	1N4448 GEGURTET	
V66	AE BAV45 35V PICOAMPDI LOW LEAKAGE DIODE	AE 252.5386	VALVO	BAV45	
V67	AE BAV45 35V PICOAMPDI LOW LEAKAGE DIODE	AE 252.5386	VALVO	BAV45	
V68	AM 2N4117S N-D 40V JFET FET	248.2486	INTERSIL	2N4117/R&S-LV	
V69	AM 2N4117S N-D 40V JFET FET	248.2486	INTERSIL	2N4117/R&S-LV	
V70	AK BC550B N 50V 100MA TRANSISTOR	AK 007.2050	SIEMENS	BC550B GURT,POL.CBE	
V71	AD 1N4448 75V 0A15 UDI DIODE	AD 012.0700	TEXAS INST	1N4448 GEGURTET	
V72	AD 1N4448 75V 0A15 UDI DIODE	AD 012.0700	TEXAS INST	1N4448 GEGURTET	
V73	AE BZX55/B8V2 0,5W ZDI ZENER DIODE	AE 012.2178	VALVO	BZX55/B8V2	
V74	AD 1N4448 75V 0A15 UDI DIODE	AD 012.0700	TEXAS INST	1N4448 GEGURTET	
V75	AF HLMP3316 LED RT RD5 LED	235.4856	HEWLETT	5082-4658	
V76	AF HLMP3316 LED RT RD5 LED	235.4856	HEWLETT	5082-4658	
V77	AK BC550B N 50V 100MA TRANSISTOR	AK 007.2050	SIEMENS	BC550B GURT,POL.CBE	
V78	AK BC550B N 50V 100MA TRANSISTOR	AK 007.2050	SIEMENS	BC550B GURT,POL.CBE	
V79	AK BC550B N 50V 100MA TRANSISTOR	AK 007.2050	SIEMENS	BC550B GURT,POL.CBE	
V80	AD 1N4448 75V 0A15 UDI DIODE	AD 012.0700	TEXAS INST	1N4448 GEGURTET	
V81	AD 1N4448 75V 0A15 UDI DIODE	AD 012.0700	TEXAS INST	1N4448 GEGURTET	

Kennz. Comp.No.	Benennung Designation	Sachnummer Stock No.	Hersteller Manufacturer	Bezeichnung Designation	enthalten in contained in
V82	AL BD139 N 80V 1A0 TRANSISTOR	AL 274.8994	VALVO	BD139	
V83	AL BD140 P 80V 1A5 TRANSISTOR	AL 335.9642	VALVO	BD140	
V84	AL BD140 P 80V 1A5 TRANSISTOR	AL 335.9642	VALVO	BD140	
V85	AK BC560B P 45V 100MA TRANSISTOR	AK 007.2044	SIEMENS	BC560B GURT,POL.CBE	
V86	AE RICHTIGE SNR0012.2161 ZENER DIODE	AE 012.2461	VALVO	BZX79/C6V2	R
V87	AM BFQ13SEL N-D DUALJFET DUAL FET	342.2033	VALVO	BFQ13 N.LV3453	
V91	AK BC550B N 50V 100MA TRANSISTOR NUR VAR/ONLY MOD: 02	AK 007.2050	SIEMENS	BC550B GURT.POL.CBE	
V92	AE BZX55/C2V7 0,5W ZDI ZENER DIODE NUR VAR/ONLY MOD: 02	AE 086.8228	AEG-TELEF.	BZX55/C2V7	
V93	AM J111A N-D 35V JFET FET	AM 007.2038	SILICONIX	J111A GEGURTET AMMOP	
V94	AD 1N4448 75V 0A15 UDI DIODE	AD 012.0700	TEXAS INST	1N4448 GEGURTET	
V95	AK BC560B P 45V 100MA TRANSISTOR	AK 007.2044	SIEMENS	BC560B GURT.POL.CBE	
V151	AD 1N4448 75V 0A15 UDI DIODE	AD 012.0700	TEXAS INST	1N4448 GEGURTET	
V152	AE BZX55/B8V2 0,5W ZDI ZENER DIODE	AE 012.2178	VALVO	BZX55/B8V2	
V161	AD 1N4448 75V 0A15 UDI DIODE	AD 012.0700	TEXAS INST	1N4448 GEGURTET	
V162	AE BZX55/B8V2 0,5W ZDI ZENER DIODE	AE 012.2178	VALVO	BZX55/B8V2	
X11	FP WINKELSTECKERLEIST.36P ANGLE PIN CONNECTOR 12-POLIG	FP 243.3578	BINDER	742-5-11-0187-00-36	
X12	FP WINKELSTECKERLEIST 36P ANGLE PIN CONNECTOR 5-POLIG	FP 243.3578	BINDER	742-5-11-0187-00-36	
X13	FP WINKELSTECKERLEIST.36P ANGLE PIN CONNECTOR 4-POLIG	FP 243.3578	BINDER	742-5-11-0187-00-36	
X21	FP STECKERLEISTE 64POL. MALE MULTIPOINT CONNECTOR	FP 273.0490	PANDUIT	100-964-033/999	
X31	FP INDIREKT.STECKERL.36P. PIN CONNECTOR 4-POLIG	FP 242.3600	BINDER	742-5-11-0178-00-36	
X32	FP INDIREKT.STECKERL.36P. PIN CONNECTOR	FP 242.3600	BINDER	742-5-11-0178-00-36	
X33	FP INDIREKT.STECKERL.36P. PIN CONNECTOR 4-POLIG	FP 242.3600	BINDER	742-5-11-0178-00-36	
X34	FP INDIREKT.STECKERL.36P. PIN CONNECTOR	FP 242.3600	BINDER	742-5-11-0178-00-36	
X50 ..53	FP INDIREKT.STECKERL.36P. PIN CONNECTOR	FP 242.3600	BINDER	742-5-11-0178-00-36	
X54	FP INDIREKT.STECKERL.36P. PIN CONNECTOR 3-POLIG	FP 242.3600	BINDER	742-5-11-0178-00-36	
X55	FP INDIREKT.STECKERL.36P. PIN CONNECTOR 3-POLIG	FP 242.3600	BINDER	742-5-11-0178-00-36	
X56	FP INDIREKT.STECKERL.36P. PIN CONNECTOR	FP 242.3600	BINDER	742-5-11-0178-00-36	
X71	FP INDIREKT.STECKERL.36P. PIN CONNECTOR 3-POLIG	FP 242.3600	BINDER	742-5-11-0178-00-36	
X72	FP INDIREKT.STECKERL.36P. PIN CONNECTOR	FP 242.3600	BINDER	742-5-11-0178-00-36	
X73	FP INDIREKT.STECKERL.36P. PIN CONNECTOR	FP 242.3600	BINDER	742-5-11-0178-00-36	
X74	FP INDIREKT.STECKERL.36P. PIN CONNECTOR 2-POLIG	FP 242.3600	BINDER	742-5-11-0178-00-36	
X75	FP INDIREKT.STECKERL.36P. PIN CONNECTOR	FP 242.3600	BINDER	742-5-11-0178-00-36	
X76	FP INDIREKT.STECKERL.36P. PIN CONNECTOR	FP 242.3600	BINDER	742-5-11-0178-00-36	

Diese Unterlage behalten wir uns alle Rechte vor

Kennz. Comp.No.	Benennung Designation	Sachnummer Stock No.	Hersteller Manufacturer	Bezeichnung Designation	enthalten in contained in
X77	FP INDIREKT.STECKERL.36P. PIN CONNECTOR 2-POLIG	FP 242.3600	BINDER	742-5-11-0178-00-36	
X91	FP INDIREKT.STECKERL.36P. PIN CONNECTOR 3-POLIG	FP 242.3600	BINDER	742-5-11-0178-00-36	
X92	FP INDIREKT.STECKERL.36P. PIN CONNECTOR	FP 242.3600	BINDER	742-5-11-0178-00-36	
X93	FP INDIREKT.STECKERL.36P. PIN CONNECTOR	FP 242.3600	BINDER	742-5-11-0178-00-36	
X94	FP INDIREKT.STECKERL.36P. PIN CONNECTOR	FP 242.3600	BINDER	742-5-11-0178-00-36	
X101	FP INDIREKT.STECKERL.36P. PIN CONNECTOR	FP 242.3600	BINDER	742-5-11-0178-00-36	
X102	FP INDIREKT.STECKERL.36P. PIN CONNECTOR 1-POLIG	FP 242.3600	BINDER	742-5-11-0178-00-36	
					- ENDE -

INTERFACE

D11-A 74HC245
R1 10K
+5VA
DP0 X21A 22
DP1 X21C 22
DP2 X21A 23
DP3 X21C 23
DP4 X21A 24
DP5 X21C 24
DP6 X21A 25
DP7 X21C 25
9 X 10K
R10-A R10-B R10-C R10-D R10-E R10-F R10-G R10-H R10-I
R11 1K R12 1K R13 1K R14 1K R15 1K R16 1K R17 1K R18 1K
C21 68P C22 68P C23 68P C24 68P C25 68P C26 68P C27 68P C28 68P
DP0A DP1A DP2A DP3A DP4A DP5A DP6A DP7A

V18 1N4448
V19 1N4448
V20 1N4448
X21C 21 LBSYPT
X21A 20 LWR
D13-A 74HC14
D14-A 74HC00
R3 2K21
C18 100P
R2 4K75
GNDD

D12-A 74HCT154
X21A 18 AP1
X21C 18 AP2
X21A 19 AP3
X21A 16 ASHYPT
R21 1K R22 1K R23 1K R24 1K R27 1K R28 1K R29 1K R30 1K
LCS0 LCS1 LCS2 LCS3 LCS4 LCS5 LCS6 LCS7 LCS11
C31 100P C32 100P C33 100P C34 100P C37 100P C38 100P C39 100P C40 100P
C42 33P
X31 1 X31 2 X31 3 X31 4
+5VC

D13-B 74HC14
X21C 15 SWPCLK
R32 1K
SWPCLKA
D13-C 74HC14
X21C 17 SWPRES
R4 4K75
GNDD
D13-D 74HC14
X21C 19 FRQSTP
D13-E 74HC14
X21A 15 PURES
D13-F 74HC14
R36 1K
GNDD
D14-B 74HC00

D15-C 74HC32
R41 10K
D15-D 74HC32
D15-A 74HC32
R42 1K82
C52 33P
D14-C 74HC00
D15-B 74HC32
R43 1K82
C53 33P
D14-D 74HC00
LWRA
R45 10K
+5VC
DP0A DP1A DP2A DP3A

D16-A 74HC161
C CPE CTE R PE Q1 Q2 Q3 Q4 CR. OUT
D17-A 74HC161
DP4A DP5A DP6A DP7A
D18-A 74HC161
DP0A DP1A DP2A DP3A

FUER DIESE UNTERLAGE
BEHALTEN WIR
ALLE RECHTE VOR
ZEICHN.-NR.

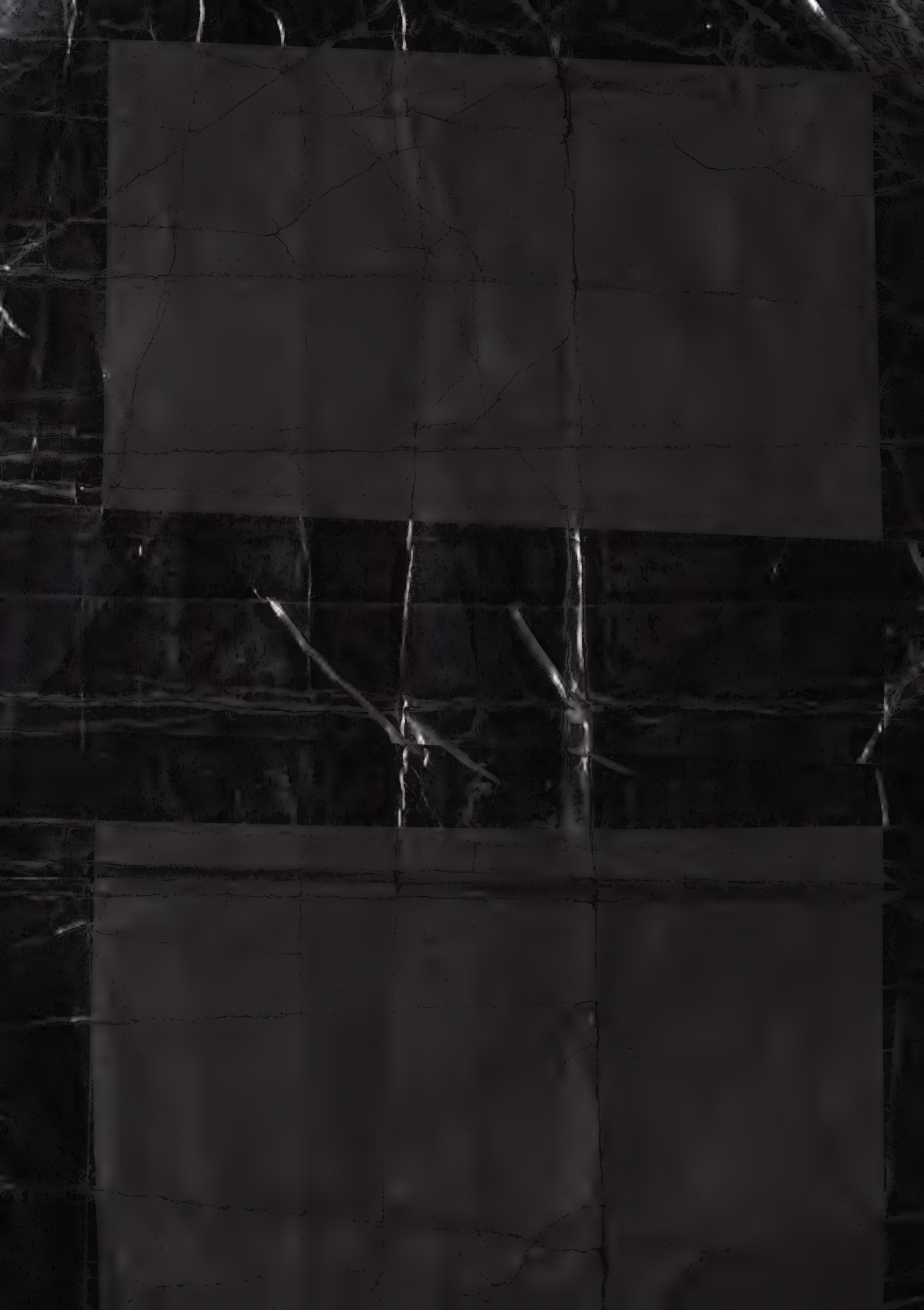

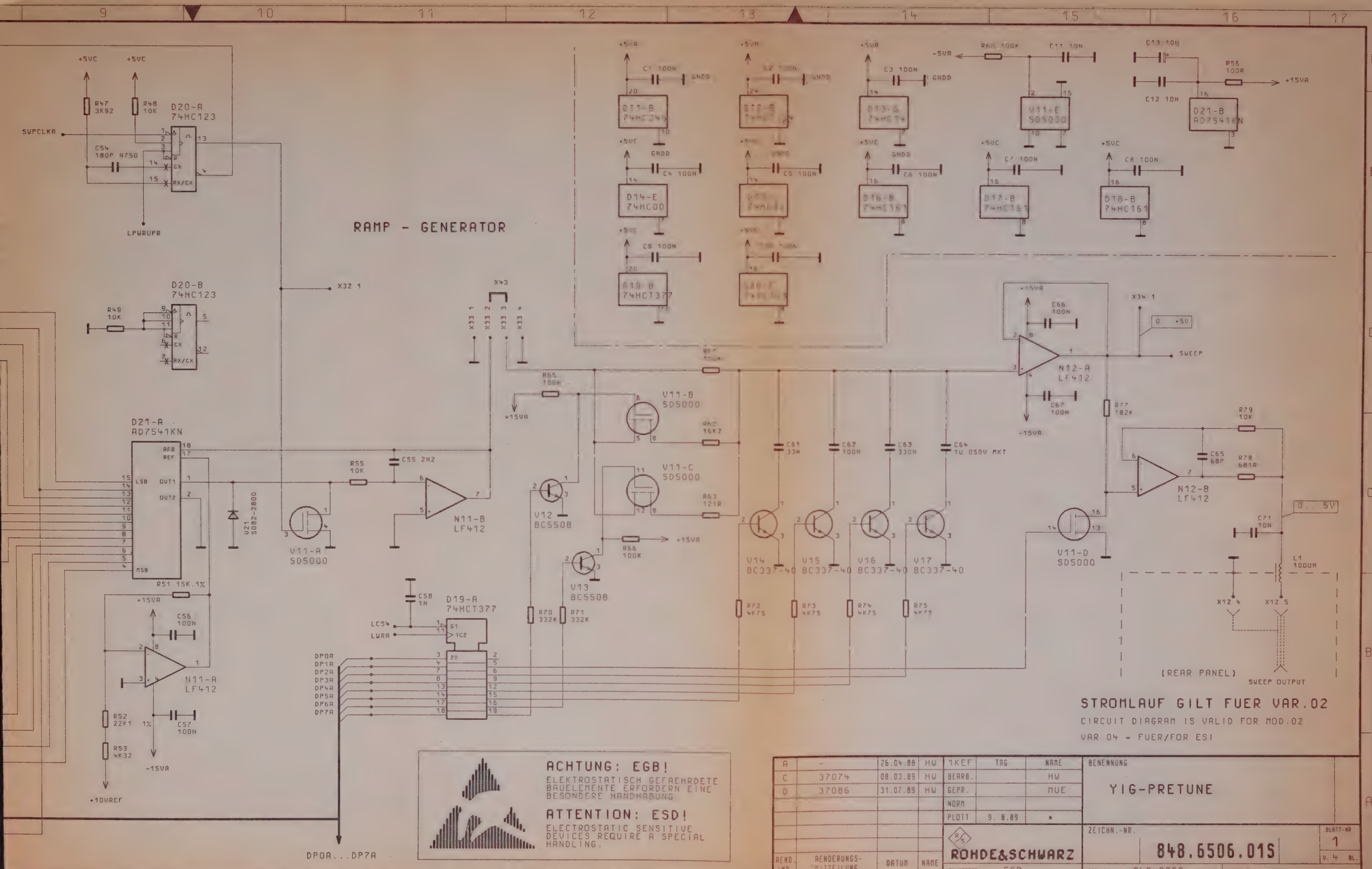
RAMP - GENERATOR
D20-A 74HC123
D20-B 74HC123
D21-A AD7541KN
D19-A 74HCT377
N11-A LF412
N11-B LF412
N12-A LF412
N12-B LF412
V11-A SD5000
V11-B SD5000
V11-C SD5000
V11-D SD5000
V12 BC550B
V13 BC550B
V14 BC337-40
V15 BC337-40
V16 BC337-40
V17 BC337-40
D14-E 74HC00
D21-B AD7541KN
SWPCLKA
LPWRUPR
SWEEP
(REAR PANEL)
SWEEP OUTPUT
DP0A...DP7A
+10VREF
+15VA
-15VA
+5VC
GNDD
X32 1
X43
X34 1
X12 4
X12 5
L1 100UH
0...5V
STROMLAUF GILT FUER VAR.02
CIRCUIT DIAGRAM IS VALID FOR MOD.02
VAR 04 - FUER/FOR ESI
ACHTUNG: EGB!
ELEKTROSTATISCH GEFAEHRDETE BAUELEMENTE ERFORDERN EINE BESONDERE HANDHABUNG
ATTENTION: ESD!
ELECTROSTATIC SENSITIVE DEVICES REQUIRE A SPECIAL HANDLING.
A - 26.04.88 HW
C 37074 08.03.89 HW
D 37086 31.07.89 HW
1KEF TAG NAME
BEARB. HW
GEPR. MUE
NORM
PLOTT 9. 8.89 *
BENENNUNG
YIG-PRETUNE
ZEICHN.-NR. 848.6506.01S
BLATT-NR 1
V. 4 BL.
ROHDE&SCHWARZ
ZU GERAET FSB
REG.I.W. 848.0020
ERSTE 2
AEND. IND.
AENDERUNGS-MITTEILUNG
DATUM
NAME

SPAN COARS TUNING

SPAN FINE TUNING

START FREQUENCY FINE TUNING

START FREQUENCY COARS TUNING

TUNING CIRCUITS

D31-A AD7548KN

D32-A AD7528KN

D33-A AD7548KN

D34-A 74HCT377

N34 OP27GZ

N32-A LF412CN

N32-B LF412CN

N33-A NE5532

V31-A SD5000

V31-B SD5000

V32 BC550B

V33 BC550B

VAR 04:

R82	182R
R83	3K32
R88	110K
R94	1K62
R95	2K
R96	75K
R97	3K92
R98	150K
R105	2K
R106	75K
R107	3K92
R108	150K
R113	18K2
R114	1K5
R141	36R

FUER DIESE UNTERLAGE BEHALTEN WIR ALLE RECHTE VOR

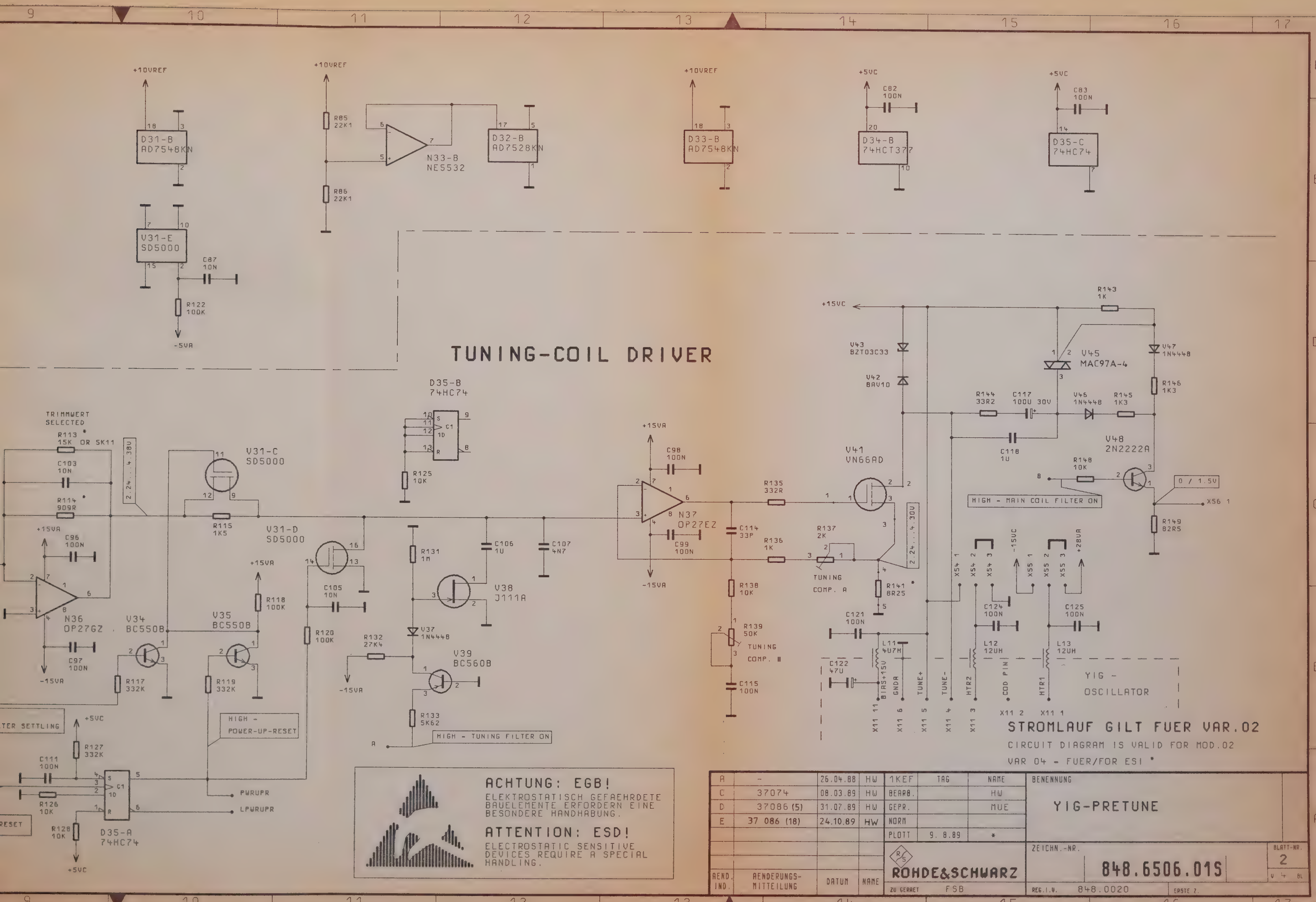

STROMLAUF GILT FUER VAR.02

CIRCUIT DIAGRAM IS VALID FOR MOD.02

VAR 04 - FUER/FOR ESI *

ACHTUNG: EGB!

ELEKTROSTATISCH GEFAEHRDETE BAUELEMENTE ERFORDERN EINE BESONDERE HANDHABUNG.

ATTENTION: ESD!

ELECTROSTATIC SENSITIVE DEVICES REQUIRE A SPECIAL HANDLING.

AEND. IND.	AENDERUNGS-MITTEILUNG	DATUM	NAME
A	-	26.04.88	HW
C	37074	08.03.89	HW
D	37086 (5)	31.07.89	HW
E	37 086 (18)	24.10.89	HW

1KEF	TAG	NAME
BEARB.		HW
GEPR.		MUE
NORM		
PLOTT	9. 8.89	*

BENENNUNG: YIG-PRETUNE

ROHDE&SCHWARZ

ZU GERAET FSB

ZEICHN.-NR. 848.6506.01S

BLATT-NR. 2

REG.I.W. 848.0020

ERSTE Z.

STOP FREQ. SYNC. SAMPLE & HOLD

START FREQ. SYNC. SAMPLE & HOLD

MULTIPLIER

FM SWEEP AMPL.

SYNC. SUM. AMPL.

LIMITER

YIG - SYNCHRONIZATION

DPOA...DP7A

SWEEP (0...5V)

LOW = SAMPLE

START/STOP SYNC. LIMIT -9.5 MHZ

SYNC. SWEEP LIMIT -9.5 MHZ

H- -8V/+9.3V LIMIT

H--2.3V/+4.5V LIMIT

L-SYNC H-SWEEPING

L-SWEEPING H-START/STOP SYNC

SPANFM

GNDA YIGSYN CODING GNDA

FUER DIESE UNTERLAGE BEHALTEN WIR ALLE RECHTE VOR

ZEICHN.-NR

FM - COIL DRIVER

D54-D 13331N
R236 4K32
+10VREF
C156 220N
FM COMP. B
R256 2K
R255 475R
R257 221R
+15VA
FM COMP. A
R258 500R
C147 100N
N60 SE5534A
C157 10P
C148 100N
-15VA
R259 1K82
C161 22P
R267 1K3
+15VC
C141 100N
N61 SE5534A
C162 10P
C142 100N
-15VC
R262 1K3
R263 33K2
R261 1K82
C163 1N OPT.
R271 82R5
R272 82R5
V82 BD139
R266 100R
R265 100R
R264 100R
V83 BD140
R273 50R10Ω
R274 82R5
R275 82R5
H-FM-OFFSET -25MHZ
R234 2K21
FM-GAIN
R235 500R
N58-B NE5532
D54-C 13331N
X77 1
X77 2
MAX +/-9 1V
R241 221K
FM SUM. AMPL.
L-SYNCHRON SWEEP
H-START/STOP SYNC.

D54-A 13331N
D54-B 13331N
L-START/STOP SYNC.
H-SYNCHRON SWEEP

V74 1N4448
V75 HLMP3316
V76 HLMP3316
V70 BC550B
LCS9
LWRA
G1
1C2
ZD
DP0A
DP1A
DP2A
DP3A
DP4A
DP5A
DP6A
DP7A
D55-A 74HCT377
DP0A...DP7A

V84 BD140
N59-B LM358
R284 1K5
R281 10K
+10VREF
V85 BC560B
C165 27P
R286 6R81
-5V BIAS
R282 3K57
R283 2K
-5VA
V86 C06V2
-5V REGULATOR
C168 100N
L22 407H
C169 100U 16V
BIAS -5V
CODING
X11 9
X11 10
X11 12
YIG - OSCILLATOR
X11 8
FM+
X11 7
FM-

D52-B 74HCT377
D55-B 74HCT377
+5VC
C131 100N
C132 100N
V80 1N4448
V81 1N4448
+5VA
D51-E 13331N
D53-E 13331N
D54-E 13331N
V77 BC550B
V78 BC550B
V79 BC550B
R214 100K
R215 100K
R216 100K
PURUPR
MAX +/-130 MA

STROMLAUF GILT FUER VAR.02
CIRCUIT DIAGRAM IS VALID FOR MOD.02
VAR 04 - FUER/FOR ESI

ACHTUNG: EGB!
ELEKTROSTATISCH GEFAEHRDETE BAUELEMENTE ERFORDERN EINE BESONDERE HANDHABUNG.
ATTENTION: ESD!
ELECTROSTATIC SENSITIVE DEVICES REQUIRE A SPECIAL HANDLING.

AEND. IND.	AENDERUNGS-MITTEILUNG	DATUM	NAME
A	-	26.04.88	HW
C	37074	08.03.89	HW
D	37086	31.07.89	HW
F	37 086(23)	11.89	HW

1KEF	TAG	NAME
BEARB.		HW
GEPR.		MUE
NORM		
PLOTT	9. 8.89	*

ROHDE&SCHWARZ
ZU GERAET FSB

BENENNUNG: YIG-PRETUNE
ZEICHN.-NR. 848.6506.01S
BLATT-NR. 3 V. 4 BL.
REG.I.V. 848.0020 ERSTE Z.

FUER DIESE UNTERLAGE BEHALTEN WIR UNS ALLE RECHTE VOR

POWER SUPPLY FILTER

X21A 13 / X21C 13 / X21A 5 / X21C 5 — +28V — L31 12UH — +28VA
- C201 100N
- C202 100N
- C203 47U 40V

X21A 7 — +15V — L32 14UH.5A — +15VA
- C204 100N
- C205 100N
- C206 47U 40V

X21C 7 — +15V — L33 10UH1A — +15VC
- C208 100N
- C209 100N
- C210 47U 40V

X21A 9 — -15V — L34 14UH.5A — -15VA
- C211 100N
- C212 100N
- C213 47U 40V

X21C 9 — -15V — L35 14UH.5A — -15VC
- C215 100N
- C216 100N
- C217 47U 40V

X21C 31 — +5V — L36 100UH — +5VC
- C218 100N
- C219 100N
- C220 100U 16V

X21A 31 — +5V — L37 100UH — +5VA
- C221 100N

X21A 32 / X21C 32 — R301 10R — GNDA / GNDD

X21C 1, X21A 2, X21C 2, X21A 4, X21C 4, X21A 6, X21C 6, X21A 8, X21C 8, X21A 10, X21C 10, X21A 12, X21C 12, X21A 14, X21C 14

VOLTAGE REFERENCE

N71 LT1021BCN8-10
- R303 82K5
- C225 1U
- C226 1U

N72 OP27GZ
- +15VA
- C241 100N
- C242 100N
- -15VA
- R304 10K
- +10VREF
- X101 1

N73 OP27GZ
- C227 1U
- R305 10K
- +15VA
- C243 100N
- C244 100N
- -15VA
- X102 1
- -10VREF

VAR 04: *

R313	1K
R314	8K25
R332	10K
R333	NICHT BESTUECKT / NOT ON BOARD
R337	NICHT BESTUECKT / NOT ON BOARD
R338	NICHT BESTUECKT / NOT ON BOARD
V91	NICHT BESTUECKT / NOT ON BOARD
V92	NICHT BESTUECKT / NOT ON BOARD
R336	10K
R341	162K
R342	13K
R346	51R1
R347	4K32
C236	120P

NICHT BESTUECKT/ NOT ON BOARD: R311, R312

R311 1M — +15VA / -15VA — PSAWT OFFSET

R312 4M75

R313 500R — PSAWT SF-GAIN — R314 9K09

SF (SHEET 2)

R341 432K — R342 56K2

SP (SHEET 2)

R343 4K75 — C231 4N7

R345 200R — R346 681R — R347 3K92 — PSAWT SP-GAIN

R351 1R

V93 J111A

V94 1N4448

LFMSUP (SHEET 2) — R352 5K62 — V95 BC560B

R353 27K4 — -15VA

EXT. TUNING VOLTAGES XSAWT

R321 10K — -15VA

N74-A OP11EY
- C245 100N
- C246 100N
- +15VA
- 0...10V
- R323 10K

R332 6K81 — MAX. 3.25V

V91 BC550B
- R333 5K62
- +15VA
- V92 C02V7
- R328 10K

N74-B OP11EY
- C232 120P
- R324 221R
- R325 10K
- C233 10N
- 0...-10V
- L38 100UH

N74-C OP11EY
- C234 120P
- R329 221R
- R330 10K
- C235 10N
- 0...+10V
- L39 407H

N74-D OP11EY
- C236 68P
- R335 221R
- R336 18K2
- MAX. 9V
- R337 10K
- R338 500R SAWT AMPLITUDE
- C237 10N
- L40 100UH

X12 1 — -DA
X12 2 — C DING
X12 3 — A AWT
X21A 30 — F AWT
X21C 30 — S AWT

STROMLAUF GILT FUER VAR.02

CIRCUIT DIAGRAM IS VALID FOR MOD.02

VAR 04 - FUER/FOR ESI *

ACHTUNG: EGB!
ELEKTROSTATISCH GEFAEHRDETE BAUELEMENTE ERFORDERN EINE BESONDERE HANDHABUNG.

ATTENTION: ESD!
ELECTROSTATIC SENSITIVE DEVICES REQUIRE A SPECIAL HANDLING.

AEND. IND.	AENDERUNGS-MITTEILUNG	DATUM	NAME
A	-	26.04.88	HW
C	37074	08.03.89	HW
D	37086	31.07.89	HW

1KEF	TAG	NAME
BEARB.		HW
GEPR.		MUE
NORM		
PLOTT	9. 8.89	*

ROHDE&SCHWARZ
ZU GERAET FSB

BENENNUNG: YIG-PRETUNE

ZEICHN.-NR. 848.6506.01S

BLATT-NR. 4 v. 4 BL.

REG.I.V. 848.0020 ERSTE Z.

ZEICHN.-NR.

Ansicht und Leitungsführung Bauteilseite
View of tracks on component side

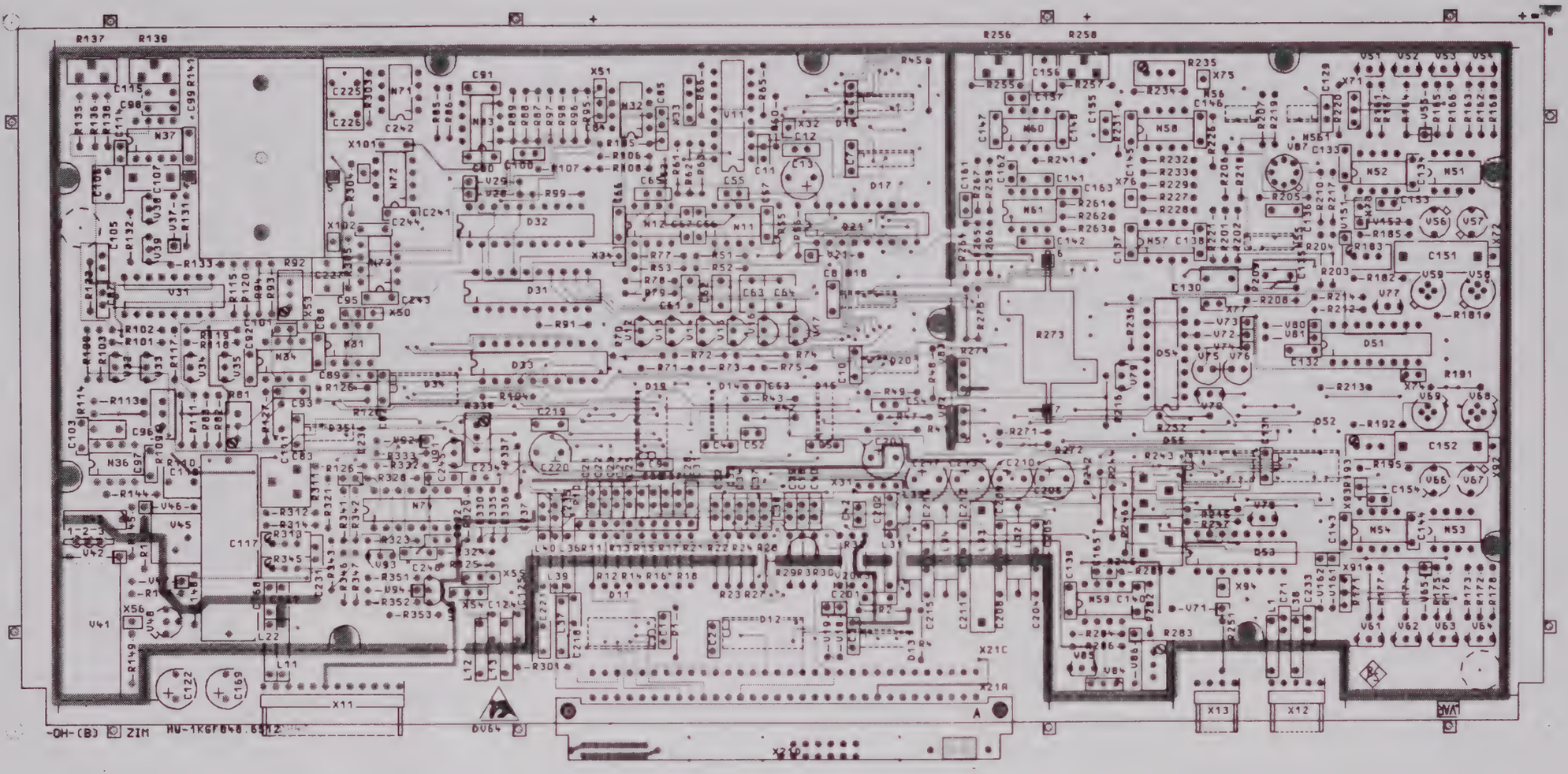

DV 41

VARIANTENERKLÄRUNG/VERSION
VAR02 – GRUNDAUSFÜHRUNG/BASIC MODEL

ACHTUNG EGB!
Elektrostatisch gefährdete Bauelemente erfordern eine besondere Handhabung
ATTENTION ESD!
Electrostatic sensitive devices require a special handling

(hierzu HVC 250)

Maße ohne Toleranzangabe			Maßstab 1 : 1		
			Halbzeug, Werkstoff		
1KGF	Tag	Name	Benennung		Z
Bearb	05.88	HW	YIG - PRETUNE		
Gepr					
Norm					
ROHDE & SCHWARZ			Zeichn.-Nr	848.6506.01 EE	Blatt-Nr 3
zu Gerat FSB			reg i V 848.0020 V	erste Z	v Bl

And Zust	Anderungs-Mitteilung	Tag	Name

Für diese Unterlage behalten wir uns alle Rechte vor.

ISO-Projektion
Methode E

Ansicht und Leitungsführung Bauteilseite
View of tracks on component side

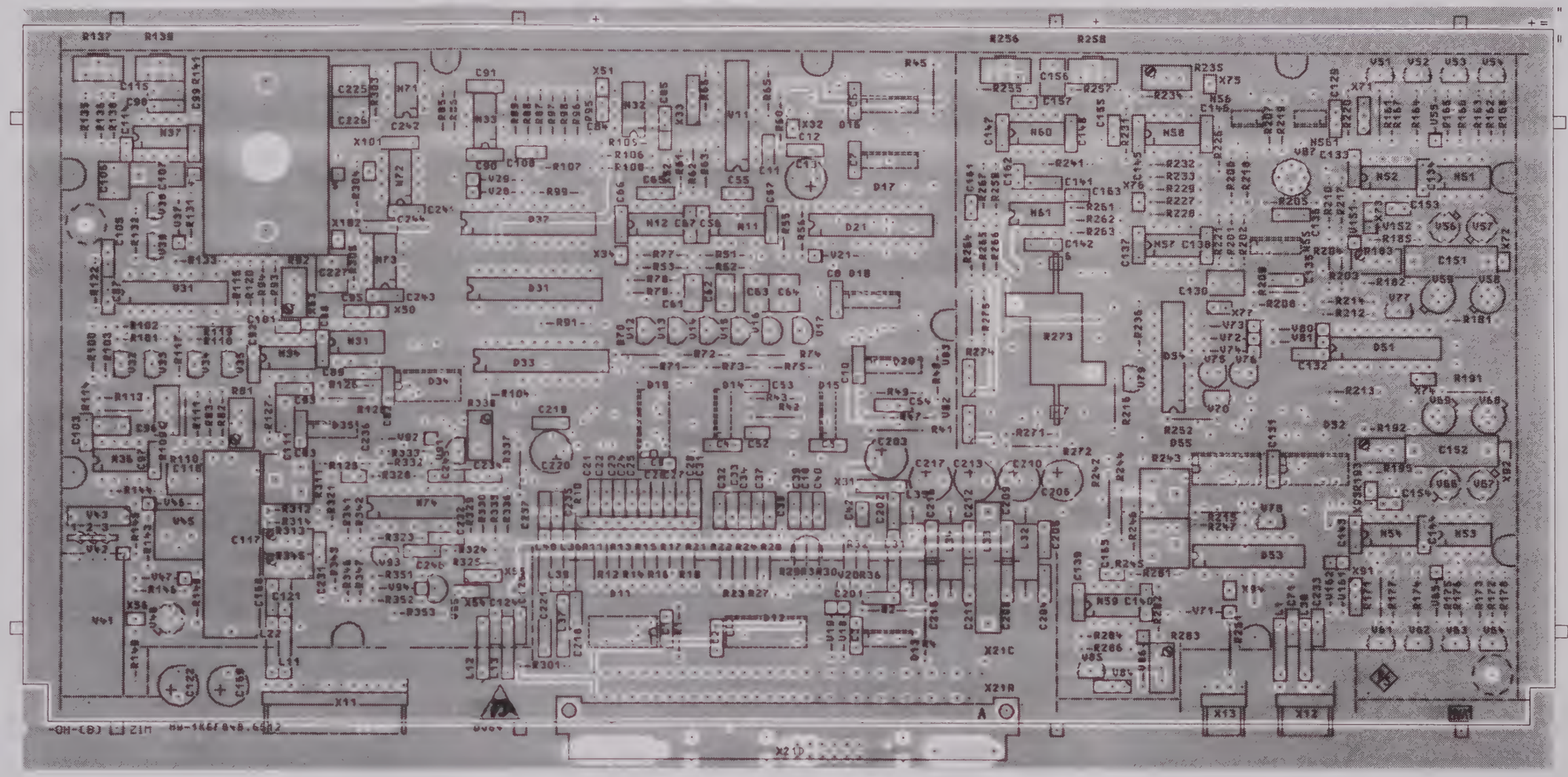

DV43

VARIANTENERKLÄRUNG/VERSION
VAR02 – GRUNDAUSFÜHRUNG/BASIC MODEL

Maße ohne Toleranzangabe	Maßstab 1 : 1	
	Halbzeug Werkstoff	
1KGF 05.88 HW	YIG - PRETUNE	Z
ROHDE&SCHWARZ	Zeichn.-Nr. 848.6506.01 EE	Bl. 4
FSB	848.0020 V erste Z	

ACHTUNG EGB
Elektrostatisch gefährdete Bauelemente erfordern eine besondere Handhabung
ATTENTION ESD
Electrostatic sensitive devices require a special handling

Ansicht und Leitungsführung Lötseite
View of tracks on solder side

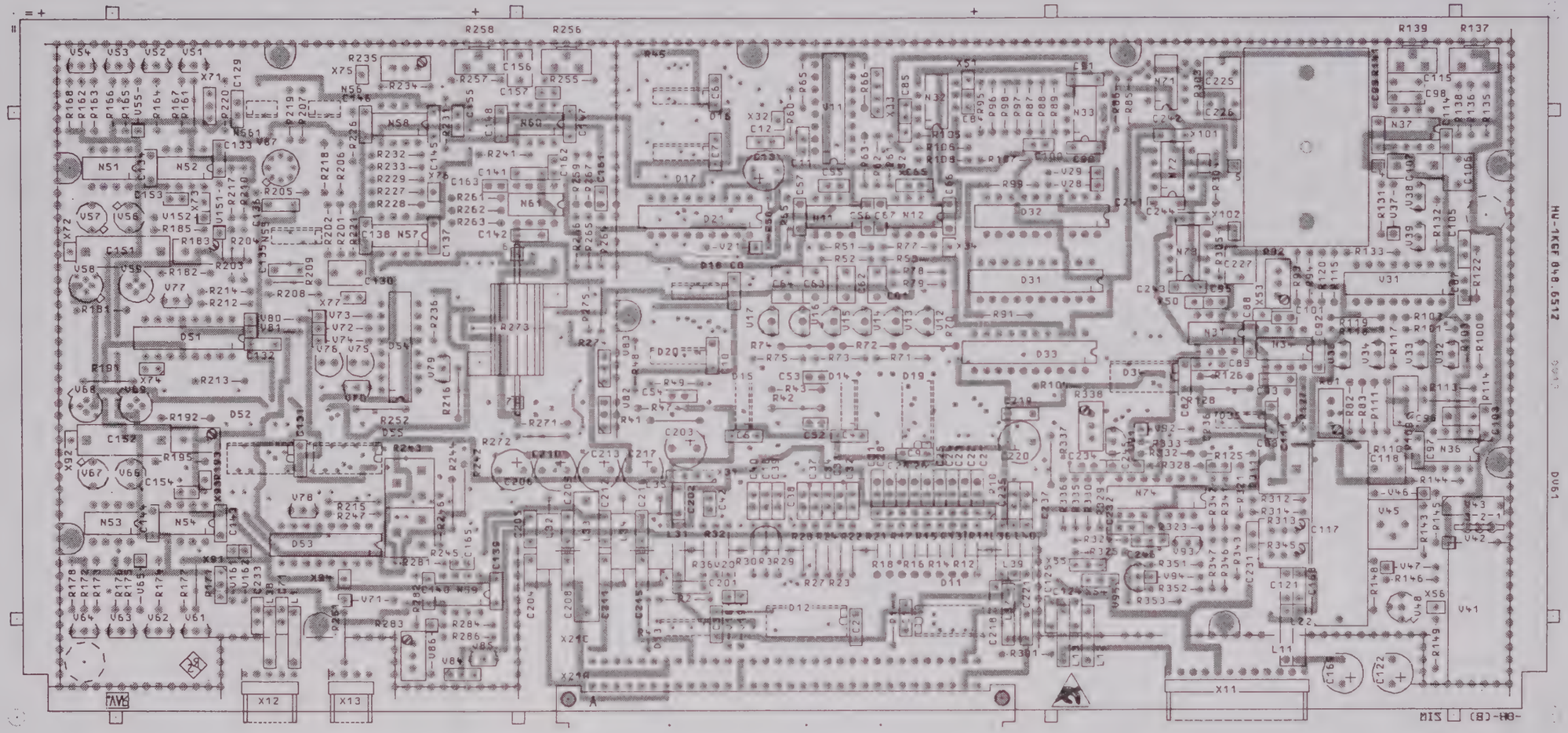

DV 13

VARIANTENERKLÄRUNG / VERSION
VAR02 – GRUNDAUSFÜHRUNG / BASIC MODEL

Maße ohne Toleranzangabe			Maßstab 1 : 1		
			Halbzeug, Werkstoff		
1KGF	Tag	Name	Benennung		
Bearb	05.88	HW	YIG - PRETUNE		Z
Gepr					
Norm					
ROHDE&SCHWARZ			Zeichn.-Nr 848.6506.01	EE	Blatt-Nr. 5 v. Bl.
zu Gerät FSB			reg. i. V 848.0020 V	erste Z.	

Änd. Zust.	Änderungs-Mitteilung	Tag	Name

(hierzu HVC 2501)

ACHTUNG: EGB!
Elektrostatisch gefährdete Bauelemente erfordern eine besondere Handhabung.
ATTENTION ESD!
Electrostatic sensitive devices require a special handling.

Für diese Unterlage behalten wir uns alle Rechte vor.

Projection mode E

PF 095 2493-0781 1 2 3 4 5 6 7 8 11 6107 87

Ansicht und Leitungsführung Lotseite
View of tracks on solder side

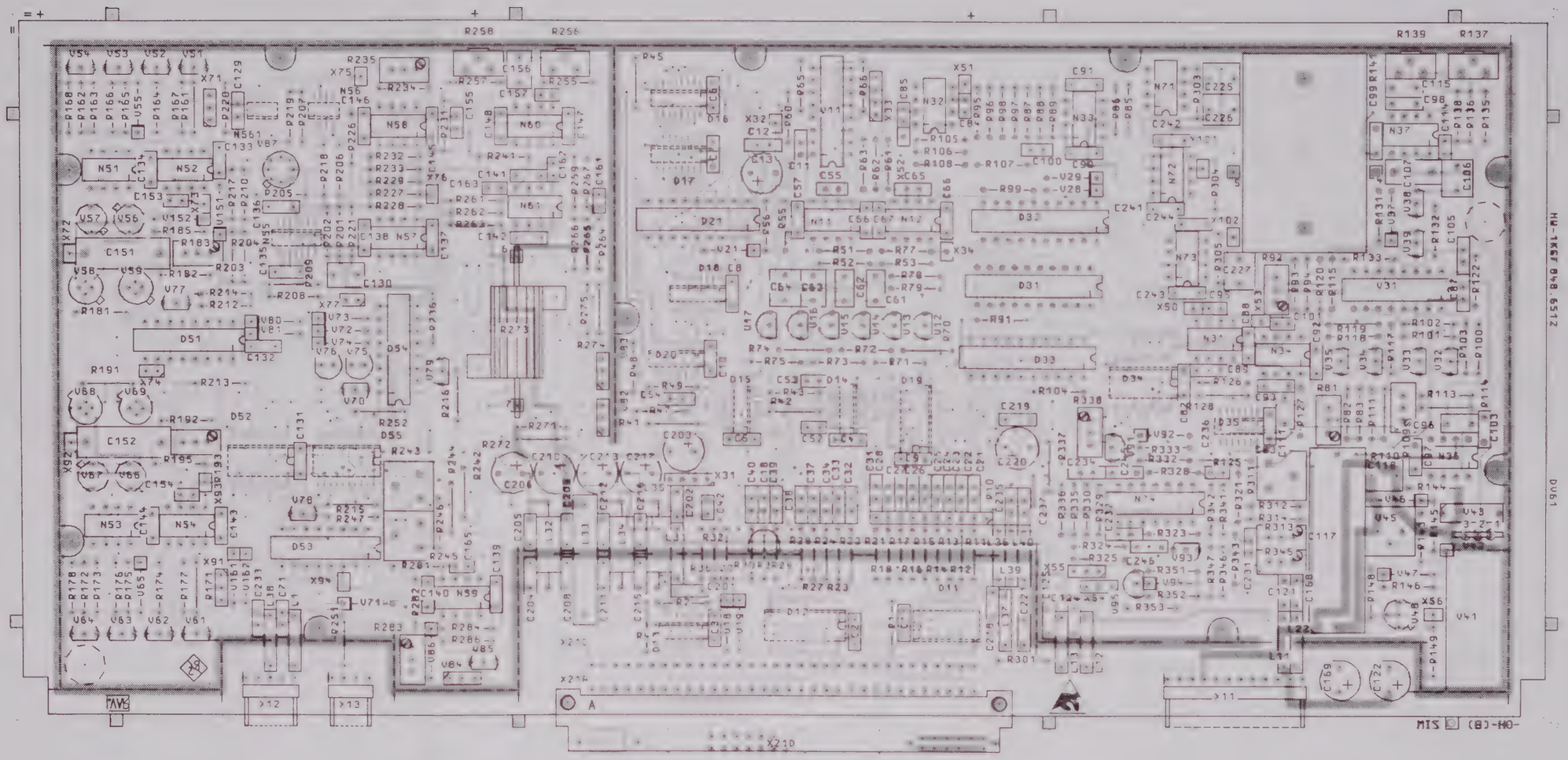

DV11

VARIANTENERKLÄRUNG / VERSION
VAR02 – GRUNDAUSFÜHRUNG / BASIC MODEL

ACHTUNG EGB!
Elektrostatisch gefährdete Bauelemente erfordern eine besondere Handhabung
ATTENTION ESD!
Electrostatic sensitive devices require a special handling

Maße ohne Toleranzangabe	Maßstab 1 : 1	
	Halbzeug Werkstoff	
1KGF 05.88 HW	Benennung YIG - PRETUNE	Z
ROHDE & SCHWARZ	Zeichn.-Nr. 848.6506.01 EE	Blatt-Nr. 6
Änderung Mittelung Name	zu Gerät FSB	reg. V 848.0020 V erste

ROHDE&SCHWARZ

SERVICE DOCUMENTATION

2nd LO / 3rd Converter

848.3507.02

Contents

		Page
6	**Service Instructions 2nd LO / 3rd Converter**	6.1
6.1	**Function Description**	6.1
6.1.1	Power Splitter	6.1
6.1.2	Doubler	6.2
6.1.3	400 MHz Bandpass Filter (BP 400)	6.2
6.1.4	Power Driver	6.3
6.1.5	Multiplier	6.3
6.1.6	5.2 GHz Bandpass Filter (BP 5200)	6.3
6.1.7	Microwave Amplifier	6.4
6.1.8	Operating Point Control	6.4
6.1.9	Output Coupler and Detector	6.4
6.1.10	Level Control	6.5
6.1.11	Error Message and Self-Test	6.5
6.1.12	Input Selection	6.7
6.1.13	15 dB Amplifier, Buffer Amplifier and Step Attenuator	6.7
6.1.14	221.4 MHz Bandpass Filter	6.7
6.1.15	Termination Filter	6.7
6.1.16	LO Amplifier	6.7
6.1.17	Control	6.7
6.2	**Testing and Adjustment**	6.9
6.2.1	200 MHz Amplifier and Doubler	6.9
6.2.2	400 MHz Bandpass Filter	6.9
6.2.3	400 MHz Amplifier	6.9
6.2.4	Multiplier	6.9
6.2.5	5.2 GHz Bandpass Filter (Spectral Line Filter)	6.9
6.2.6	Microwave Amplifier	6.10
6.2.7	Level Control	6.10
6.2.8	Phase Noise	6.10
6.2.9	Checking Error Message	6.10
6.2.10	Testing Control	6.10
6.2.11	Testing LO Amplifier	6.11
6.2.12	Testing Termination Filter	6.11
6.2.13	Testing and Adjusting Step Attenuator, 15 dB Amplifier and 3 dB Buffer Amplifier	6.11
6.2.14	Testing Input Selection and 12 dB Amplifier	6.11
6.2.15	Setting 221.4 MHz Bandpass Filter	6.12
6.2.16	Adjusting 221.4 MHz Bandpass Filter	6.15
6.2.17	Measuring Intermodulation Ratio	6.15
6.2.18	Checking Signal-to-Image-Ratio	6.15
6.3	**Troubleshooting**	6.16

Parts lists
Circuit diagrams
Component location plans

6 Service Instructions 2nd LO / 3rd Converter

(See circuit diagram 848.3507 S)

6.1 Function Description

This circuit board contains 2 separate function units which are independent of each other:

- 2nd LO
- 3rd converter

It has been designed as a discrete circuit in the RF range, planar microstrip technology has been used for the microwave range.

2nd LO

(See block diagram Fig. 6-8)

The local oscillator is generated by fixed frequency multiplication, with inserted spectral line filtering, from a 200 MHz reference.

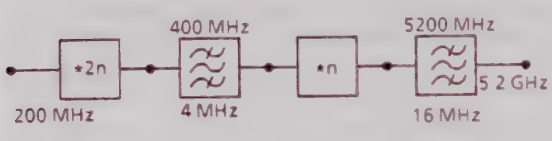

Fig. 6-1 Basic principle of frequency multiplication

As a result of the fixed multiplication, the oscillator has the basic stability of the reference source. It is merely that the phase noise is increased in line with the (n) frequency multiplication according to $\Delta P = -20 \lg n$.

6.1.1 Power Splitter

In the pre-stage to the 2nd LO, the 200 MHz reference signal is split at low loss by a discrete power splitter and then applied to the 2nd LO as well as the 3rd converter

The split-off signal is first matched to the 50 Ω system at narrow bandwidth via an LC circuit with a characteristic impedance of 100 Ω and applied to an integrated amplifier via a controlled attenuating element (D1).

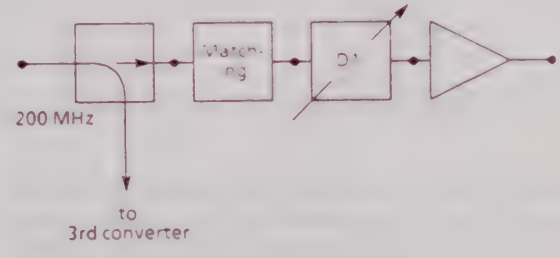

Fig. 6-2 200 MHz driver

The attenuator serves for compensating level tolerances of the reference module.

The amplifier (driver 1) compensates the level loss and provides the required driver level for the doubler.

6.1.2 Doubler

The reference signal is doubled to widen the spectral line spacing and thus to simplify the required filtering in the microwave range.

The doubler circuit consists of a BALanced-to-UNbalanced converter (balun) with fixed central tapping. Its outputs are opposite-phased and lead to two diodes.

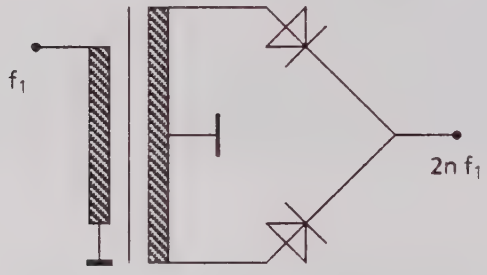

Fig. 6-3 Doubler circuit

This results in full-wave rectification of the RF signal. Due to the symmetrical arrangement, an even-order multiplication is obtained.This means that the odd-order spectral lines are highly attenuated in the output spectrum.

6.1.3 400 MHz Bandpass Filter (BP 400)

A helix filter made up of two resonators is inserted for spectral line selection of the required 400 MHz spectral line.

The individual resonators consist of ceramic coils and mechanical fine-thread tuning screws for capacitively influencing the series circuits.

Coupling is provided via a microstrip line, which is short-circuited at high impedance to the signal ground. .

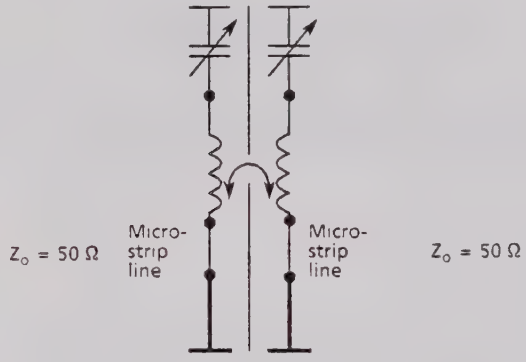

Fig. 6-4 Basic circuit BP 400

The filter cavities are coupled via a coupling slot in the separating wall.

The filter is strongly subject to environmental conditions and has the correct center frequency only if the resonator cavities are covered. In this structure, a Q factor of 100 is obtained at a passband attenuation of approx. 5 dB.

Apart from spectral line selection, bandpass filter BP 400 is also required for improving the broadband noise, since no phase control is possible with fixed frequency multiplication, as would be the case with a PLL.

Outside of its 3 dB bandwidth of approx. 4 MHz, the broadband noise is reduced.

6.1.4 Power Driver

The reference signal which is output from the 400 MHz bandpass filter is characterized by an adequate spectral line spacing when it is later multiplied, so that the required spectral line selection is minimized.

The 400 MHz signal is first boosted in level by approx. 25 dB. This is carried out in two stages

The first stage (Driver 2) is an integrated amplifier with hardly external circuit elements. In this stage, the signal is amplified by approx. 12 dB.

The second stage is the power driver generating the required driver level for the high-frequency multiplier. It consists of a selective amplifier with additional operating point control. Special filtering of low-frequency interferences is required in this stage, since such interferences would directly affect the 2nd LO signal as to its phase noise or broadband noise close to the carrier. The power driver stage provides an output level of more than 18 dBm.

6.1.5 Multiplier

The high-frequency multiplier is made up of a self-biasing SRD (step recovery diode) multiplier and is implemented as a planar circuit.

The 400 MHz power signal is first matched at low loss by a planar LC combination and applied to a tuning driver circuit.

This circuit consists of the tuning capacitor, the planar driver inductor and the step recovery diode with the biasing resistor and is tuned to the harmonics of the basic frequency.

Due to the fast electronic SRD switch, an extremely narrow output pulse is provided. The pulse width of this output pulse determines the bandwidth of the output spectrum.

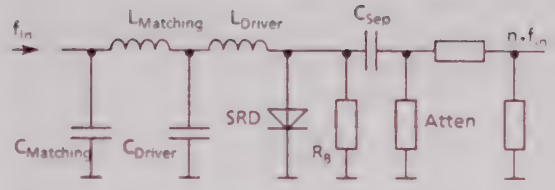

Fig. 6-5 Basic multiplier cirucit

As a result of the asymmetrical structure, all harmonics are generated

An attenuating element is series-connected in the circuit for broadband matching of the output as well as for stabilizing the circuit. It must be dc-disconnected, since otherwise the operating point of the circuit would drift.

6.1.6 5.2 GHz Bandpass Filter (BP 5200)

A $\lambda/4$ coaxial-resonator filter made up of three resonators is used for selection of the required 5.2 GHz spectral line. The resonators are capacitively coupled as well as coupled to one another via coupling apertures between the internal resonators. Because of the widening of the spectral line spacing, a three-resonator filter can be adequately and easily tuned to obtain a stopband attenuation of approx. 100 dB with the adjacent spectral lines. The filter has a Q factor of about 300 at a pass-band attenuation of < 3 dB.

Apart from spectral line attenuation, bandpass filter BP 5200 is also required for improving the broadband noise outside of the 3 dB bandwidth and for spectrally relieving the µW amplifier switched in series after BP 5200. The filter is externally adjusted and mounted to the module via SMA connector.

6.1.7 Microwave Amplifier

The microwave amplifier consists of four amplifier stages with inserted attenuators and provides a signal amplification of approx. 30 dB.

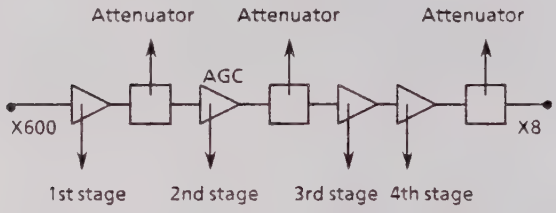

Fig. 6-6 Block diagram of microwave amplifier

The three amplifier stages 1, 3 and 4 have fixed operating points, the second stage has a operating point controlled by the output level. Temperature compensation of the amplification is thus possible in combination with an adjustable output power.

The individual amplifiers are GaAsFET amplifiers matched to the striplines, which require a special on/ off as well as special protective circuit.

The fourth amplifier stage provides a maximum output level of about 23 dBm and is characterized by an output attenuating element to eliminate tendencies towards oscillations caused by unfavourable mixer input impedances. The attenuating element has the disadvantage of reducing the useful signal level, but guarantees a stable operation due to forced matching.

6.1.8 Operating Point Control

Th operating point control of the GaAsFET amplifiers includes the special on/off as well as special protective circuit which guratantees the time-accurate sequence of gate voltage and drain voltage rise. First the gate voltage is set to the negative range before the drain voltage or voltage reference is controlled to the positive voltage range. In addition to the build-up of voltage, this circuit also ensures the voltage depression in reverse sequence and protects the sensitive components from being destroyed in the case of failure of any supply voltage.

The operating point is adjusted by way of comparing the reference voltage divided down (nominal drain voltage) and the current-conditioned voltage drop at a series resistor. The used differential amplifiers such control the required operating point (V_D, I_D) via a gate voltage control. Protective diodes and voltage dividers are fitted at their outputs to ensure the voltage polarity and avoid exceeding of the maximum voltages.

6.1.9 Output Coupler and Detector

A planar coupler is series-connected to the last amplifier stage of the microwave amplifier. It is designed to supply an additional output level reduced by approx. 20 dB.

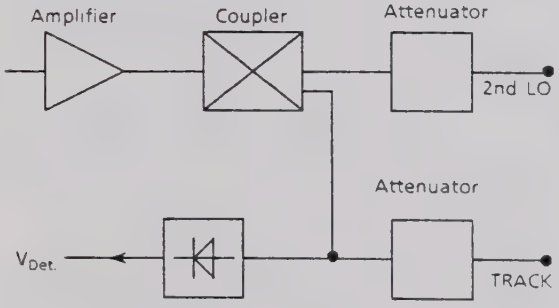

Fig. 6-7 Output coupler and detector

The signal path or coupling path have additional output attenuating elements to improve the matching and to avoid amplifier instabilities and disturbances.

Part of the power from the output coupler is branched off in the coupling path for a detector diode and the detected RF level applied as dc voltage level to the control amplifier and thus to the level-controlled amplifier stage.

The attenuator in the coupling path to the tracking output must be dimensioned such that a minimum lowering of level is not exceeded with an open input.

6.1.10 Level Control

The positive detector level is applied to a control amplifier with an adjustable amplification from 5 to 50. The positive output voltage of the control amplifier is used to be applied via a inverting stage to the level-controlled amplifier stage 2 of the microwave amplifier. Moreover, this positive output voltage also provides an analog performance check (STL2LO) and a digital errror criterion (LEL2LO).

The level variation gives a range of approx. 6 dB as a result of the effect on the amplification of the second amplifier stage of the microwave amplifier.

The amplifier is opened at a low detector level, with its gate voltage only slightly negative.

The voltage drop produced at the series resistor is used for drain current setting.

6.1.11 Error Message and Self-Test

The output voltage of the control amplifier is applied via a divider (1:2) to a window comparator, which can initiate a level error message in digital form (LEL2L0) to be given out on the instrument display as soon as a lower threshold (level too high) or an upper threshold (level too low) is violated.

Frequency errors are not checked, since a fixed frequency multiplication has the accuracy of the fundamental frequency.

In addition to the error messages, a self-test can be performed and the amplified detector level be given out as STL2LO by an A/D converter via a further division (1:2), which means a total division of 1:4.

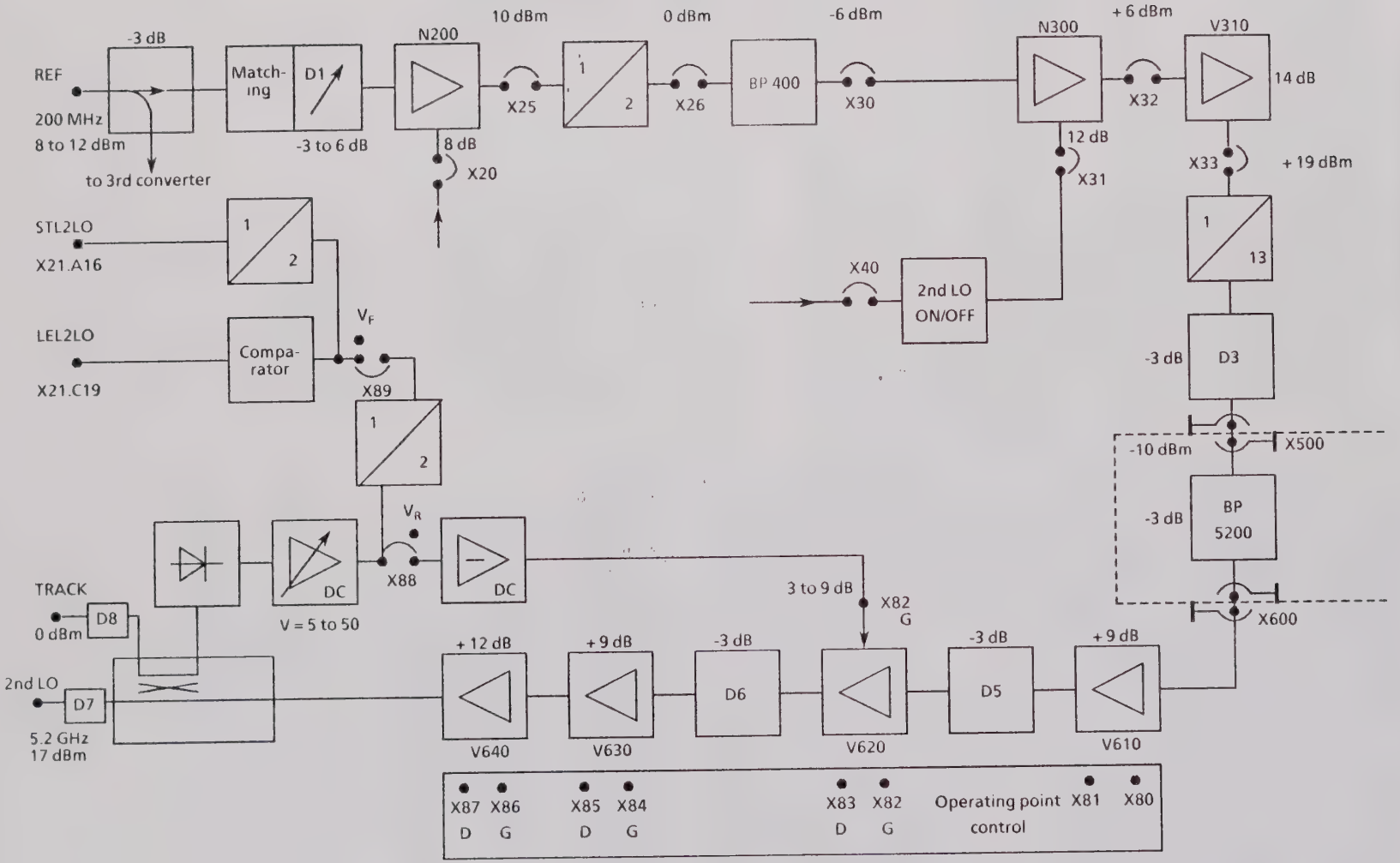

Fig. 6-8 Block diagram 2nd LO

3rd Converter

(See block diagram Fig. 6-9)

The 3rd converter is used for converting 221.4 MHz signals from three switchable sources to 21.4 MHz. Also a broadband IF output 221.4 MHz is available.

6.1.12 Input Selection

The converter has three inputs for 221.4 MHz signals:

a) X1 is switched on if V1 and V3 as well as V25 are forward-biased and V2, V4 and V24 reverse-biased.

b) X2 is switched on if V4, V2 and V25 are forward-biased and V3, V1 and V24 reverse-biased

Also, a DC bias can be fed into X21.C16, which is applied via R3, R4 and L5 to X2

c) X3 is switched on if V24 is forward-biased and V25 reverse-biased.

The signals from X1 and X2 are amplified using a low-noise amplifier (V10, V13) and the series-connected attenuator by approx. 7 dB compared with input X3.

6.1.13 15 dB Amplifier, Buffer Amplifier and Step Attenuator

Following input selection, the signal is coupled out by V91 at high impedance and applied to the rear panel of the instrument.

The signal path leads to a switchable 10 dB step attenuator (step-switching adjustable using R35), and then to a 15 dB amplifier (V42). R46-C46 and R47 to R49 are used for negative feedback. V45 controls the operating point.

10 dB step attenuator

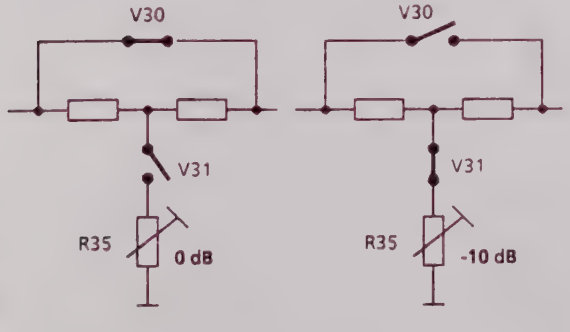

6.1.14 221.4 MHz Bandpass Filter

The filter is made up of 7 resonators coupled with capacitors, which must be capacitively adjusted. It is used for image frequency suppression to 178.6 MHz.

Bandwidth (-3 dB) > 15 MHz; $a_d \approx 2$ dB

6.1.15 Termination Filter

This filter is a defined termination for the mixer at the IF output and clears the 21.4 MHz signal of components of the LO frequency (200 MHz) and frequency 10.7 MHz.

6.1.16 LO Amplifier

The 200 MHz signal applied to X6 is divided up for the 2nd LO and the 3rd converter using T200.

The 3rd LO component is amplified at low feedback in a cascode amplifier (V110, V111) and applied to the LO input of the mixer via the differential amplifier output stage

R125, L120 and C119 are used for matching

6.1.17 Control

The module functions are controlled by the microprocessor via latch D15.

A control command is read in using the following pulse sequence.

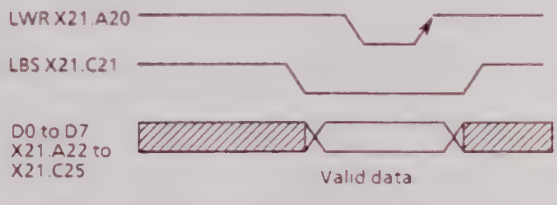

	Active IF input		
	X1	X2	X3
D0	1	0	0
D1	0	1	0
D2	0	0	1
D3	0 Step attenuator 1		-10 dB 0 dB
D4	not assigned		
D5	not assigned		
D6	not assigned		
D7	0 2nd LO 1		on off

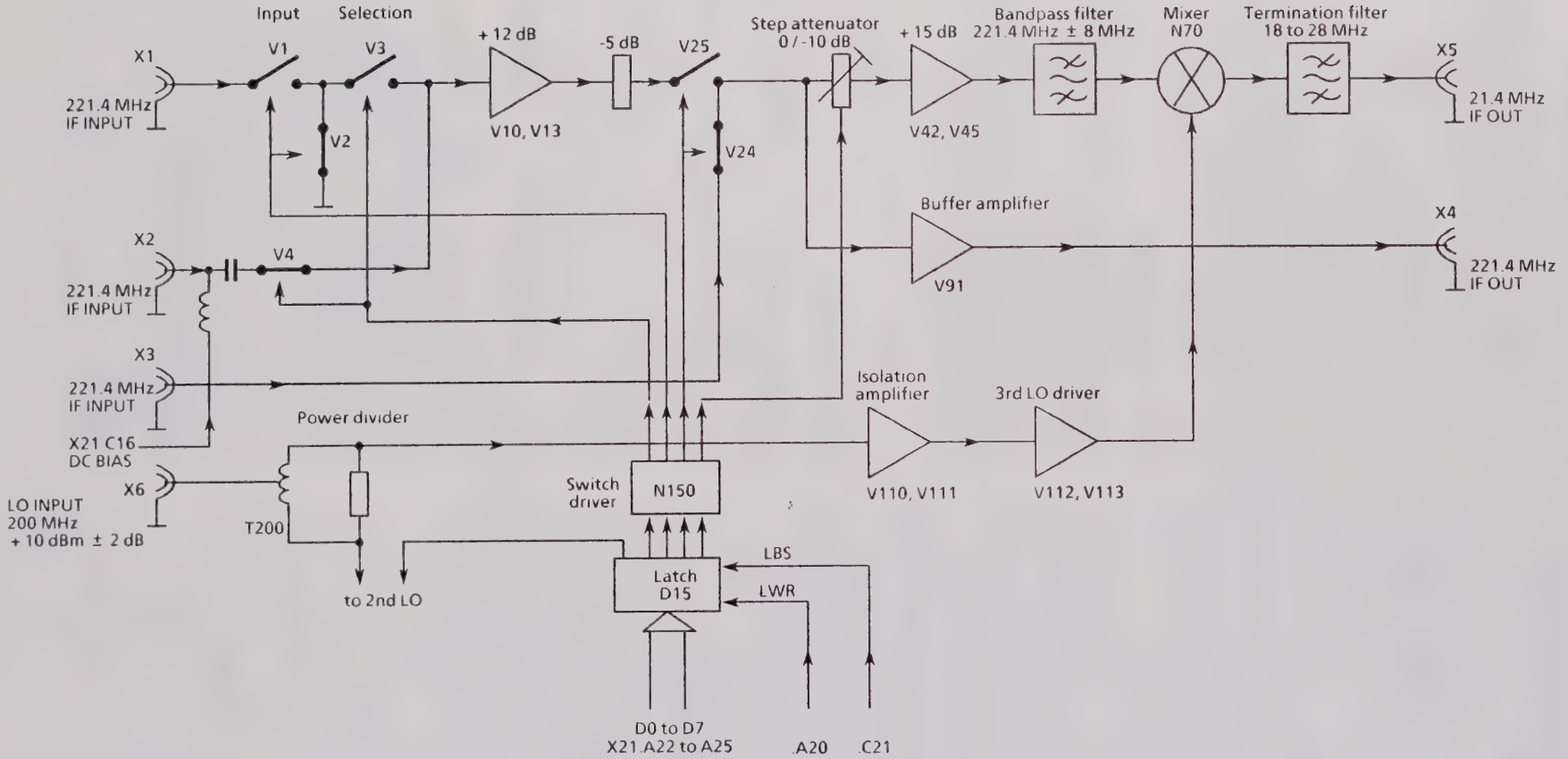

Fig. 6-9 Block diagram 3rd converter

6.2 Testing and Adjustment

Unless otherwise specified, the cover on the solder side is to be screwed on tightly for the tests and adjustments. The test points are accessible from the component side via test sockets.

The operating voltage must be applied for all measurements of the microwave components.

2nd LO

6.2.1 200 MHz Amplifier and Doubler

- Apply signal of 200 MHz, + 10 dBm to reference input X6.
- Measure operating current of N200 at X20:
  I = 50 mA ± 5 mA
- Measure output spectrum at X26 A using spectrum analayzer and adjust level of f_{sig} = 400 MHz to -2 dBm using R203.

6.2.2 400 MHz Bandpass Filter

- Fit the following cover (contained in Service Kit FS-Z1) and screw on tightly.

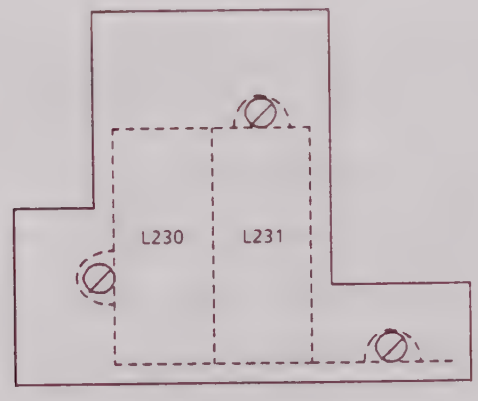

- Remove jumpers X26 and X30.
- Apply 400 MHz signal to X26 B
- Measure output signal at X30.A.
- Adjust to maximum output signal using adjustment screws at L230, L231.
- Reinsert jumpers.

6.2.3 400 MHz Amplifier

- Measure operating current of N300 at X31:
  I = 35 mA ± 3 mA
- Check operating points at V310.
  V_B = 1.25 V ± 0.1 V
  V_E = 0.5 V ± 0.05 V
  V_C = 5.6 V ± 0.5 V
- Apply signal of 200 MHz, + 10 dBm to reference input X6
- Measure level at X33 using spectrum analyzer with 400 MHz.
  Level: + 18 dBm ± 2 dBm.

6.2.4 Multiplier

- Apply signal of 200 MHz, + 10 dBm to reference input X6.
- Measure level at X500 using spectrum analyzer with 5.2 GHz.
  Nominal value: ≥ -6 dBm

6.2.5 5.2 GHz Bandpass Filter (Spectral Line Filter)

- Remove filter and adjust filter curve at network analyzer.

  Adjust minimum passband attenuation to 5200 MHz (<3 dB) using the middle adjustment screw.
  Adjust symmectrical filter curve using outer adjustment screws.
  (3 dB bandwidth <20 MHz).
- Refit filter.

6.2.6 Microwave Amplifier

- Insert jumper X88 to X88.B1, B2.

Measuring of operating points:

V610	X80.A	V_G	= -0.7	±	0.2 V
	X81.A	V_D	= 5	±	0.3 V
V620	X82.A	V_G	= -0.85	±	0.1 V
	X83.A	V_D	= 5.7	±	0.5 V
V630	X84.A	V_G	= -0.7	±	0.2 V
	X85.A	V_D	= 5	±	0.3 V
V640	X86.A	V_G	= -0.8	±	0.5 V
	X87.A	V_D	= 8	±	0.3 V

Checking amplification:

- Apply signal of 5200 MHz, -10 dBm to X600.
- Measure level at X8 using spectrum analyzer. Level ≥ 17 dBm.
- Terminate X8 by 50 Ω.
- Check level at X7. Level -5 dBm.
- Insert jumper X88 to X88.A1, B1.

6.2.7 Level Control

- Fit cover of component and screw on tightly.
- Apply signal of 200 MHz, + 10 dBm to X6.
- Measure level at X8 using spectrum analyzer.
- Adjust level to + 17 dBm using R821. (Take into consideration cable attenuation between X8 and spectrum analyzer). It must be possible to adjust the level continuously and without jumps between + 18 dBm und + 13 dBm.

6.2.8 Phase Noise

The following values apply for the spectral purity of the 5.2 GHz signal:

Carrier offset	Phase noise	Remark
100 kHz	-122 dBc/Hz	
200 kHz	-125 dBc/Hz	
400 kHz	-126 dBc/Hz	
1 MHz	-129 dBc/Hz	
2 MHz	-130 dBc/Hz	Threshold 1 BP400
4 MHz	-132 dBc/Hz	
10 MHz	-134 dBc/Hz	Threshold 2 BP5200
20 MHz	-135 dBc/Hz	
50 MHz	-135 dBc/Hz	far off

6.2.9 Checking Error Message

- Insert jumper X89 to X89.B (1.4 V). V_{C803} = Low → no error X21.A16 (STL2LO) = 0.7 V (2:1 divider)
- Remove X89. V_{C803} = High → error
- Insert jumper X89 to X89.A1, A2.

3rd Converter

6.2.10 Testing Control

- Read in data word 15_{10} and connect DVM to X19.A1 to X19.A4. *Measured value:* + 12 V to + 15 V
- Read in data word 0. *Measured value:* -12 V to -15 V
- Apply dc voltage of + 10 V ± 10 mV to X21.C16 and measure at X2 using DVM. *Measured value:* + 10 V ± 10 mV
- Remove voltage source from X21.C16.

6.2.11 Testing LO Amplifier

- a) Apply signal of 200 MHz, -20 dBm from signal generator to X6.
- b) Connect RF voltmeter to X111/110 and adjust measured value to maximum using L110.
  Measured value: > -4 dBm
- c) Set generator level to +8 dBm.
  Value measured at X111: > 17 dBm
- d) Set generator level to +12 dBm.
  Value measured at X111 differs from c) by: < 1 dB
- Insert jumper to X111-X112.

6.2.12 Testing Termination Filter

- Connect network analyzer to X107 and X5
- Check S11 at X107.
  S11: ≤ -20 dB from 18 to 25 MHz
  S11: ≤ -18 dB from 150 to 500 MHz
- Check S21 according to Fig. 6-10.

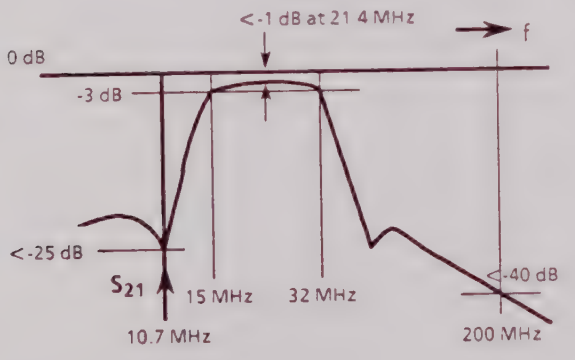

Fig. 6-10 S21

- Insert jumper to X106-X107.

6.2.13 Testing and Adjusting Step Attenuator, 15 dB Amplifier and 3 dB Buffer Amplifier

- Apply signal of 221.4 MHz, -15 dBm from signal generator to X3 and connect RF voltmeter to X116.
- Enter service function 1.44.01.12
- Value measured at X116: -1 dBm ± 0.5 dB
  (Store; display in ΔdB)
- Enter service function 1.44.01.4 and adjust display of RF voltmeter to -10 dB ± 0.1 dB using R35.
- Connect RF voltmeter to X4 and terminate X116 by 50 Ω.
  Measured value: -11 dBm ± 3 dB
  (Adjust to maximum using L96)
- Enter service function 1.44.01.11, terminate X2 by 50Ω.
  Measured value: < -30 dBm

6.2.14 Testing Input Selection and 12dB Amplifier

- Apply signal of 221.4 MHz, 22 dBm from signal generator to X1.
- Enter service function 1.44.01.9.
- Connect RF voltmeter to X116 and terminate X2 by 50 Ω.
  Measured value: -0.5 dBm ± 0.5 dB
- Enter service function 1.44.01.10.
  Measured value: < -35 dBm
- Apply signal of 221.4, -22 dBm from signal generator to X2.
  Measured value: -0.7 dBm ± 0.5 dB
- Enter service function 1.44.01.9 and terminate X1 by 50 Ω.
  Measured value: < -15 dBm
- Enter service function 1.44.01.12.
  Measured value: < -35 dBm

6.2.15 Setting 221.4 MHz Bandpass Filter

- Use cover for top side of 221.4 MHz bandpass filter (contained in Service Kit FS-Z1).
- Connect network analyzer (center frequency 221.4 MHz, span 50 MHz) between X117 and X101.
- Fit cover on component side.
- Check S11 (X117) while scaling is switched to 1 dB/div.
- Touch capacitors C54, C56 and C62 with finger tips at connection 2 and adjust minimum of S11 to the middle using C50.
- Proceed in this manner in accordance with the following table until all circuits are adjusted.

Attenuation of circuits using fingers	Adjustment element	Typical representation S11 or S22
C54, 56, 62	C50	see Fig. 6-11
C56, 62, 66	C54, 50	see Fig. 6-12
C62, 66, 70	C56, 54, 50	see Fig. 6-13
C66, 70, 74	C62, 56, 54 possibly C50	see Fig. 6-14
C70, 66, 62	C74	see Fig. 6-11
C66, 62, 56	C70, 74	see Fig. 6-12
C62, 56, 54	C66, 70, 74	see Fig. 6-13
C56, 54, 50	C62, 66, 70 possibly C74	see Fig. 6-14

- Checking: S21 > -2 dB at 221.4 MHz
  S11 ≤ -20 dB at 221.4 MHz
  S22 ≤ -20 dB at 221.4 MHz

  See Fig. 6-10 for nominal representation of S21.

  Bandwidth (-3 dB): 15 MHz to 20 MHz

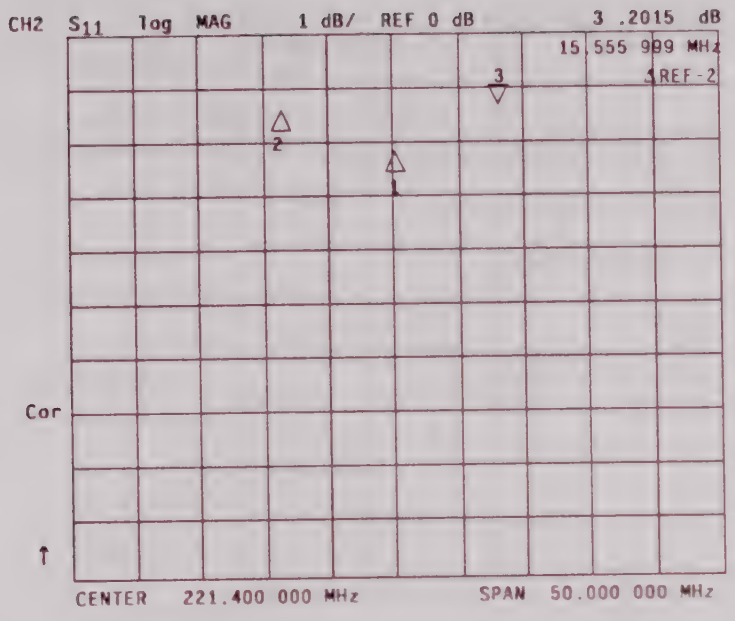

Fig. 6-11

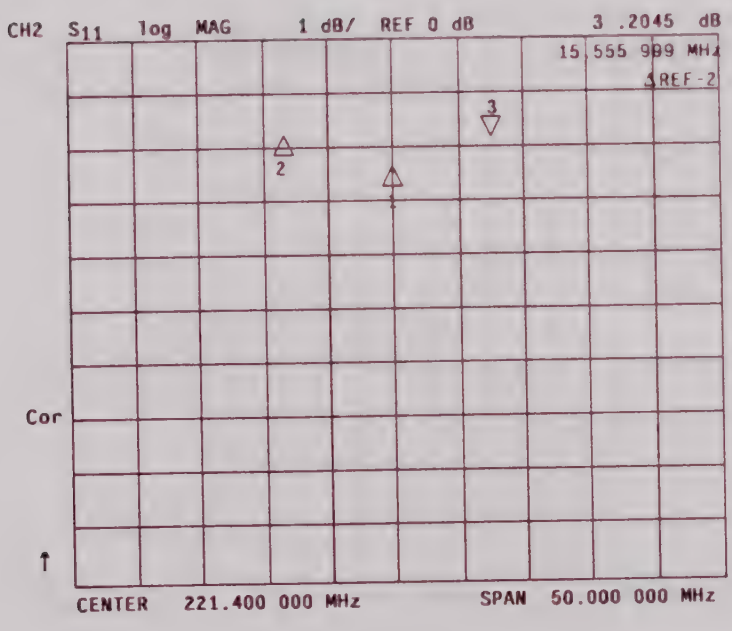

Fig. 6-12

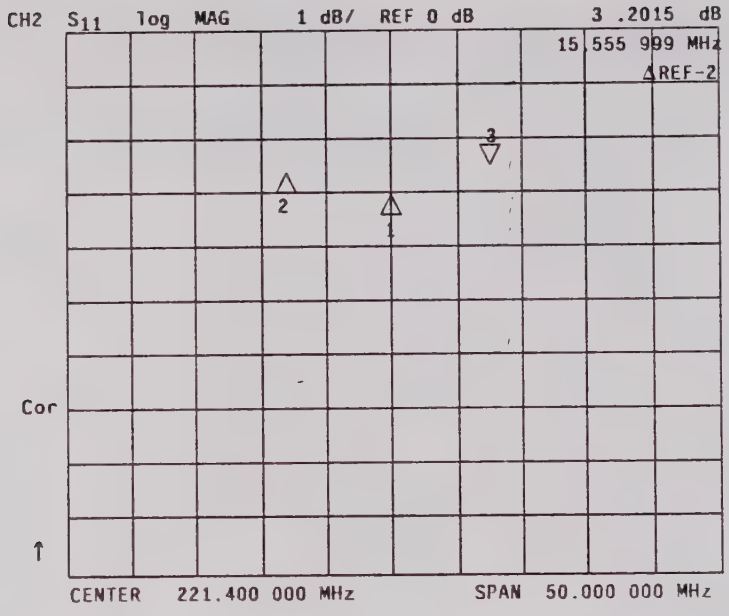

Fig. 6-13

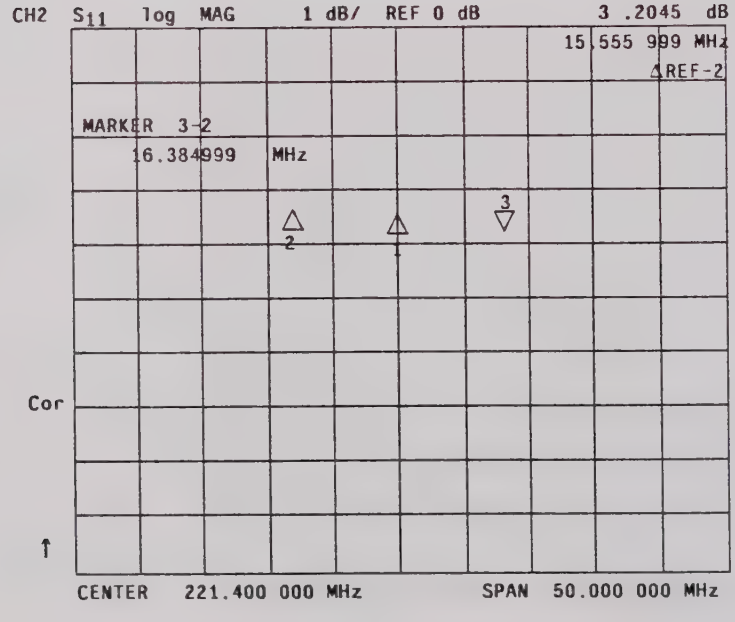

Fig. 6-14

6.2.16 Adjusting 221.4 MHz Bandpass Filter

- Insert jumper to X116-X117.
- Connect network analyzer (center frequency 221.4 MHz, span 50 MHz) between X3 and X101.
- Fit cover.
- Enter service function 1.44.01.12.
- Adjust to optimum S11 and S22 using C50 and possibly C54, C58.
- Checking:: S21 ≥ 12 dB at 221.4 MHz
  S11 ≤ -20 dB at 221.4 MHz
  S22 ≤ -20 dB at 221.4 MHz
  Bandwidth (-3 dB):
  15 MHz to 20 MHz
- Insert jumper to X101-X102.

6.2.17 Measuring Intermodulation Ratio

- Fit cover.
- Test setup as shown below. Set the generator level ($level_0$) such that 2x (-20 dBm) are measured after 3 dB coupler.

Test setup:

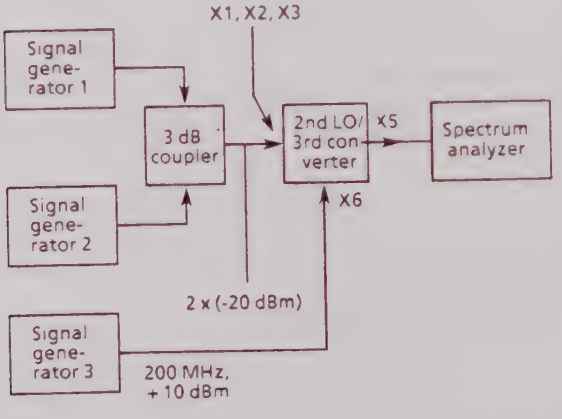

Settings:

Signal generator 1 (SMG)	221.35 MHz Shift special 23 approx. -17 dBm
Signal generator 2 (SMG)	221.45 MHz Shift special 23 approx. -17 dBm
Signal generator 3	200 MHz + 10 dBm
Spectrum analyzer (FSA)	Center frequency 21.4 MHz Span 400 kHz VBW 300 Hz Ref. level -15 dBm Low distortion

- Set module according to following table and measure intermodulation ratio

Applied to	Generator level (dBm)	Service function 1.44.01.xx	Intermodulation ratio
X3	$level_0$	12	> 67 dB
X3	$level_0$ + 10	4	> 67 dB
X1	$level_0$ -7	9	> 67 dB
X1	$level_0$ + 3	1	> 60 dB
X2	$level_0$ -7	10	> 67 dB
X2	$level_0$ + 3	2	> 60 dB

6.2.18 Checking Signal-to-Image-Ratio

- Apply signal of 178.6 MHz, -10 dBm to X3.
- Enter service function 1.44.01.12.
- Connect test receiver or spectrum analyzer to X5 and measure signal level at 21.4 MHz.
  Nominal value: ≤ -120 dBm

2nd LO

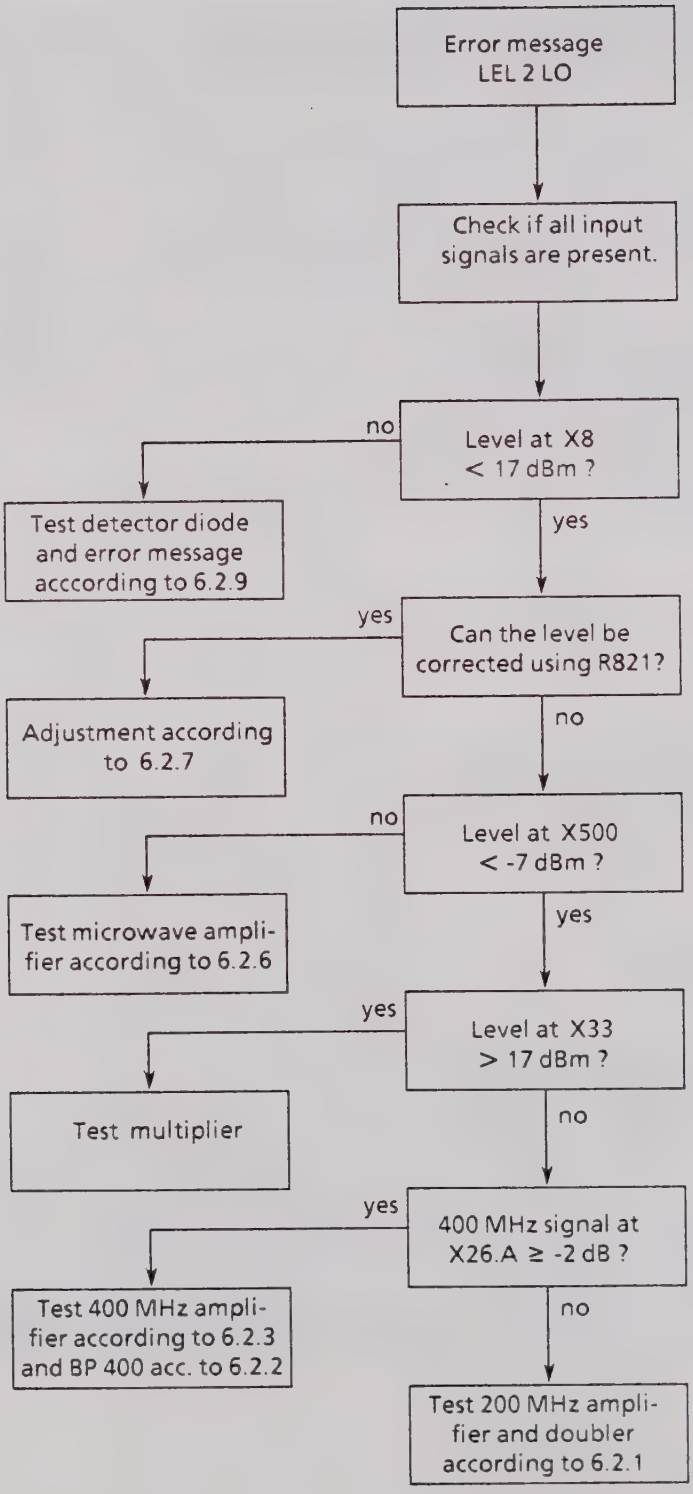
Error message LEL 2 LO
Check if all input signals are present.
Level at X8 < 17 dBm ?
no
Test detector diode and error message acccording to 6.2.9
yes
Can the level be corrected using R821?
yes
Adjustment according to 6.2.7
no
Level at X500 < -7 dBm ?
no
Test microwave amplifier according to 6.2.6
yes
Level at X33 > 17 dBm ?
yes
Test multiplier
no
400 MHz signal at X26.A ≥ -2 dB ?
yes
Test 400 MHz amplifier according to 6.2.3 and BP 400 acc. to 6.2.2
no
Test 200 MHz amplifier and doubler according to 6.2.1

3rd Converter

Notes on troubleshooting:

- Check 200 MHz signal at X111 ($\geq$ + 17 dBm).
- Check dc operating points of amplifier according to circuit diagram.
- Test input selection function and 10 dB step attenuator (dc check).
  Diode voltages (forward-biased):
  approx. 0.8 V
  Diode voltages (reverse-biased):
  > 10 V (except V3: 0.8 V).
- Test termination filter and 221.4 MHz bandpass filter according to 6.2.12 and 6.2.15.
- Check overall function according to section 6.2 (Testing and Adjustment).

ROHDE&SCHWARZ

Schaltteillisten
Stromläufe
Bestückungspläne

Part lists
Circuit diagrams
Components plans

Listes des pièces détachées
Schémas de Circuit
Plans des composants

(R 29500 Bl 2)
895.1000 BL 2

Kennz. Comp.No.	Benennung Designation	Sachnummer Stock No.	Hersteller Manufacturer	Bezeichnung Designation	enthalten in contained in
.	ZUGEH.STROML./CIRC.DIAGR. 848.3507 S				
A500	ZE BANDPASS 5.2 GHZ	848.3588			
C1	CC 120PF+-1%50V NPO 1206 CERAMIC CHIP CAPACITOR	CC 099.8838	VITRAMON	VJ 1206 A 121 F FAT	
C2	CC 330PF+-2%6X9N750 CERAMIC CAPACITOR	CC 087.6964	VALVO	2222 678 58331	
C3	CC 330PF+-2%6X9N750 CERAMIC CAPACITOR	CC 087.6964	VALVO	2222 678 58331	
C4	CC 1NF+-1% 50V NPO 1206 CERAMIC CHIP CAPACITOR	CC 007.7398	VITRAMON	VJ1206 A 102 F FAT	
C6	CC 330PF+-2%6X9N750 CERAMIC CAPACITOR	CC 087.6964	VALVO	2222 678 58331	
C7	CC 1NF+-1% 50V NPO 1206 CERAMIC CHIP CAPACITOR	CC 007.7398	VITRAMON	VJ1206 A 102 F FAT	
C8	CC 1NF+-10%63V K2000 CERAMIC CAPACITOR	CC 022.0784	VALVO	2222 63051 102	
C9	CC 10NF-20+50%7X8R4000 CAPACITOR	CC 087.7525	VALVO	2222 63051 64051103	
C10	CC 330PF+-2%6X9N750 CERAMIC CAPACITOR	CC 087.6964	VALVO	2222 678 58331	
C12	CC 1NF+-1% 50V NPO 1206 CERAMIC CHIP CAPACITOR	CC 007.7398	VITRAMON	VJ1206 A 102 F FAT	
C15	CK 1UF+-10%50V5RM MKT CAPACITOR	CK 099.2998	WIMA	MKS2/50/1UF/10%	
C16	CC 330PF+-2%6X9N750 CERAMIC CAPACITOR	CC 087.6964	VALVO	2222 678 58331	
C17	CC 1NF+-1% 50V NPO 1206 CERAMIC CHIP CAPACITOR	CC 007.7398	VITRAMON	VJ1206 A 102 F FAT	
C18	CC 3,3PF+-0,25PF50V NPO CERAMIC CHIP CAPACITOR	CC 007.8194	VITRAMON	VJ 1206 A 3R3 C FAT	
C22	CC 330PF+-2%6X9N750 CERAMIC CAPACITOR	CC 087.6964	VALVO	2222 678 58331	
C23	CC 1NF+-10%63V K2000 CERAMIC CAPACITOR	CC 022.0784	VALVO	2222 63051 102	
C24	CC 1NF+-1% 50V NPO 1206 CERAMIC CHIP CAPACITOR	CC 007.7398	VITRAMON	VJ1206 A 102 F FAT	
C31	CC 1NF+-1% 50V NPO 1206 CERAMIC CHIP CAPACITOR	CC 007.7398	VITRAMON	VJ1206 A 102 F FAT	
C32	CC 330PF+-2%6X9N750 CERAMIC CAPACITOR	CC 087.6964	VALVO	2222 678 58331	
C35	CC 330PF+-2%6X9N750 CERAMIC CAPACITOR	CC 087.6964	VALVO	2222 678 58331	
C40	CC 1NF+-1% 50V NPO 1206 CERAMIC CHIP CAPACITOR	CC 007.7398	VITRAMON	VJ1206 A 102 F FAT	
C41	CC 47NF+-10%50V X7R 1206 CERAMIC CHIP CAPACITOR	CC 007.5195	VITRAMON	VJ1206 Y 473 K FAT	
C42	CC 5,6PF+-0,25PF4X5P100 CAPACITOR	CC 087.6264	VALVO	2222 678 03568	
C43	CC 100PF+-2%6X9NP0 CAPACITOR	CC 087.6541	VALVO	2222 678 10101	
C44	CC 1NF+-10%63V K2000 CERAMIC CAPACITOR	CC 022.0784	VALVO	2222 63051 102	
C46	CC 100PF+-1%50V NPO 1206 CERAMIC CHIP CAPACITOR	CC 099.8415	VITRAMON	VJ1206 A 101 F FAT	
C48	CC 1NF+-1% 50V NPO 1206 CERAMIC CHIP CAPACITOR	CC 007.7398	VITRAMON	VJ1206 A 102 F FAT	
C50	CT 9,2PF TAUCHTR.RD 7X12 AIR-TYPE TRIMMER	CT 025.7367	TEKELEC	LUFTTRAT5200	
C51	CC 5,2PF0,25PF50VNP0 0805 CAPACITOR	CC 093.5650	VITRAMON	VJ0805A5R2CFA	
C52	CC 5,2PF0,25PF50VNP0 0805 CAPACITOR	CC 093.5650	VITRAMON	VJ0805A5R2CFA	
C53	CC 5,2PF0,25PF50VNP0 0805 CAPACITOR	CC 093.5650	VITRAMON	VJ0805A5R2CFA	
C54	CT 9,2PF TAUCHTR.RD 7X12 AIR-TYPE TRIMMER	CT 025.7367	TEKELEC	LUFTTRAT5200	
C55	CC 5,2PF0,25PF50VNP0 0805 CAPACITOR	CC 093.5650	VITRAMON	VJ0805A5R2CFA	
C56	CC 5,2PF0,25PF50VNP0 0805 CAPACITOR	CC 093.5650	VITRAMON	VJ0805A5R2CFA	
C57	CC 5,2PF0,25PF50VNP0 0805 CAPACITOR	CC 093.5650	VITRAMON	VJ0805A5R2CFA	
C58	CT 9,2PF TAUCHTR.RD 7X12 AIR-TYPE TRIMMER	CT 025.7367	TEKELEC	LUFTTRAT5200	

Für diese Unterlage behalten wir uns alle Rechte vor

Kennz. Comp.No.	Benennung Designation	Sachnummer Stock No.	Hersteller Manufacturer	Bezeichnung Designation	enthalten in contained in
C59	CC 4,3PFO,25PF50VNPO 0805 CAPACITOR	CC 093.5643	VITRAMON	VJ0805A4R3CFA	
C60	CC 4,3PFO,25PF50VNPO 0805 CAPACITOR	CC 093.5643	VITRAMON	VJ0805A4R3CFA	
C61	CC 4,3PFO,25PF50VNPO 0805 CAPACITOR	CC 093.5643	VITRAMON	VJ0805A4R3CFA	
C62	CT 9,2PF TAUCHTR.RD 7X12 AIR-TYPE TRIMMER	CT 025.7367	TEKELEC	LUFTTRAT5200	
C63	CC 4,3PFO,25PF50VNPO 0805 CAPACITOR	CC 093.5643	VITRAMON	VJ0805A4R3CFA	
C64	CC 4,3PFO,25PF50VNPO 0805 CAPACITOR	CC 093.5643	VITRAMON	VJ0805A4R3CFA	
C65	CC 4,3PFO,25PF50VNPO 0805 CAPACITOR	CC 093.5643	VITRAMON	VJ0805A4R3CFA	
C66	CT 9,2PF TAUCHTR.RD 7X12 AIR-TYPE TRIMMER	CT 025.7367	TEKELEC	LUFTTRAT5200	
C67	CC 5,2PFO,25PF50VNPO 0805 CAPACITOR	CC 093.5650	VITRAMON	VJ0805A5R2CFA	
C68	CC 5,2PFO,25PF50VNPO 0805 CAPACITOR	CC 093.5650	VITRAMON	VJ0805A5R2CFA	
C69	CC 5,2PFO,25PF50VNPO 0805 CAPACITOR	CC 093.5650	VITRAMON	VJ0805A5R2CFA	
C70	CT 9,2PF TAUCHTR.RD 7X12 AIR-TYPE TRIMMER	CT 025.7367	TEKELEC	LUFTTRAT5200	
C71	CC 5,2PFO,25PF50VNPO 0805 CAPACITOR	CC 093.5650	VITRAMON	VJ0805A5R2CFA	
C72	CC 5,2PFO,25PF50VNPO 0805 CAPACITOR	CC 093.5650	VITRAMON	VJ0805A5R2CFA	
C73	CC 5,2PFO,25PF50VNPO 0805 CAPACITOR	CC 093.5650	VITRAMON	VJ0805A5R2CFA	
C74	CT 9,2PF TAUCHTR.RD 7X12 AIR-TYPE TRIMMER	CT 025.7367	TEKELEC	LUFTTRAT5200	
C75	CC 180PF+-1%50V NPO 1206C CHIP CAPACITOR	CC 099.8844	VITRAMON	VJ1206 A 181 F FAT	
C76	CC 39PF+-1%50V NPO 1206 CERAMIC CHIP CAPACITOR	CC 099.8796	VITRAMON	VJ1206 A 390 F FAT	
C77	CC 120PF+-1%50V NPO 1206 CERAMIC CHIP CAPACITOR	CC 099.8838	VITRAMON	VJ 1206 A 121 F FAT	
C78	CC 390PF+-1%50V NPO 1206 CERAMIC CHIP CAPACITOR	CC 099.8880	VITRAMON	VJ1206 A 391 F FAT	
C80	CC 180PF+-1%50V NPO 1206C CHIP CAPACITOR	CC 099.8844	VITRAMON	VJ1206 A 181 F FAT	
C81	CC 68PF+-1%50V NPO 1206 CERAMIC CHIP CAPACITOR	CC 099.8815	VITRAMON	VJ1206 A 680 F FAT	
C82	CC 33PF+-1%50V NPO 1206 CERAMIC CHIP CAPACITOR	CC 099.8780	VITRAMON	VJ1206 A330F FAT	
C84	CC 1,8PF+-0,25PF50V NPO CERAMIC CHIP CAPACITOR	CC 007.8165	VITRAMON	VJ1206 A 1R8 C FAT	
C90	CC 1NF+-1% 50V NPO 1206 CERAMIC CHIP CAPACITOR	CC 007.7398	VITRAMON	VJ1206 A 102 F FAT	
C91	CC 100PF+-2%6X9NPO CAPACITOR	CC 087.6541	VALVO	2222 678 10101	
C93	CC 1NF+-1% 50V NPO 1206 CERAMIC CHIP CAPACITOR	CC 007.7398	VITRAMON	VJ1206 A 102 F FAT	
C94	CC 330PF+-2%6X9N750 CERAMIC CAPACITOR	CC 087.6964	VALVO	2222 678 58331	
C95	CC 1,2PF+-0,25PF3X4P100 CAPACITOR	CC 087.6187	VALVO	2222 678 03128	
C110	CC 1NF+-1% 50V NPO 1206 CERAMIC CHIP CAPACITOR	CC 007.7398	VITRAMON	VJ1206 A 102 F FAT	
C111	CC 1NF+-10%63V K2000 CERAMIC CAPACITOR	CC 022.0784	VALVO	2222 63051 102	
C112	CC 120PF+-2%6X9NPO CAPACITOR	CC 087.6558	VALVO	2222 678 10121	
C113	CC 330PF+-2%6X9N750 CERAMIC CAPACITOR	CC 087.6964	VALVO	2222 678 58331	
C114	CC 33PF+-2%4X5NPO CAPACITOR	CC 087.6487	VALVO	2222 678 10339	
C115	CC 15PF+-1%50V NPO 1206 CERAMIC CHIP CAPACITOR	CC 099.8750	VITRAMON	VJ1206 A 150 F FAT	
C116	CC 1NF+-1% 50V NPO 1206 CERAMIC CHIP CAPACITOR	CC 007.7398	VITRAMON	VJ1206 A 102 F FAT	
C117	CC 330PF+-2%6X9N750 CERAMIC CAPACITOR	CC 087.6964	VALVO	2222 678 58331	
C118	CC 330PF+-2%6X9N750 CERAMIC CAPACITOR	CC 087.6964	VALVO	2222 678 58331	
C119	CC 10PF+-0,25PF50VNPO1206 CERAMIC CHIP CAPACITOR	CC 099.8480	VITRAMON	VJ1206 A 100 C FAT	

Kennz. Comp.No.	Benennung Designation	Sachnummer Stock No.	Hersteller Manufacturer	Bezeichnung Designation	enthalten in contained in
C150 ..153	CC 1NF+-1% 50V NPO 1206 CERAMIC CHIP CAPACITOR	CC 007.7398	VITRAMON	VJ1206 A 102 F FAT	
C160	CC 10NF+-10%50V X7R 1206 CERAMIC CHIP CAPACITOR	CC 099.8521	VITRAMON	VJ1206 Y 103 K FAT	
C161	CC 10NF+-10%50V X7R 1206 CERAMIC CHIP CAPACITOR	CC 099.8521	VITRAMON	VJ1206 Y 103 K FAT	
C162	CC 100PF+-1%50V NPO 1206 CERAMIC CHIP CAPACITOR	CC 099.8415	VITRAMON	VJ1206 A 101 F FAT	
C163	CC 100PF+-1%50V NPO 1206 CERAMIC CHIP CAPACITOR	CC 099.8415	VITRAMON	VJ1206 A 101 F FAT	
C200	CC 10PF+-0,25PF3X4N750 CAPACITOR	CC 087.6787	VALVO	2222 678 57109	
C201	CC 220PF+-1%50V NPO 1206 CERAMIC CHIP CAPACITOR	CC 099.8850	VITRAMON	VJ1206 A 221 F FAT	
C202	CC 220PF+-1%50V NPO 1206 CERAMIC CHIP CAPACITOR	CC 099.8850	VITRAMON	VJ1206 A 221 F FAT	
C203	CC 220PF+-1%50V NPO 1206 CERAMIC CHIP CAPACITOR	CC 099.8850	VITRAMON	VJ1206 A 221 F FAT	
C204	CC 10NF+-10%50V X7R 1206 CERAMIC CHIP CAPACITOR	CC 099.8521	VITRAMON	VJ1206 Y 103 K FAT	
C205	CC 5,6PF+-0,25PF50V NPO CERAMIC CHIP CAPACITOR	CC 007.8220	VITRAMON	VJ1206 A5R6 C FAT	
C206	CC 2,7PF-0,25PF50V NPO CERAMIC CHIP CAPACITOR	CC 007.8188	VITRAMON	VJ1206 A 2R7 C FAT	
C207	CE 100UF-10+50% 16V 9X13 ELECTROLYTIC CAPACITOR	CE 006.7165	ROEDERST	EK 00CB 310 D	
C210	CC 100PF+-1%50V NPO 1206 CERAMIC CHIP CAPACITOR	CC 099.8415	VITRAMON	VJ1206 A 101 F FAT	
C211	CC 10NF+-10%50V X7R 1206 CERAMIC CHIP CAPACITOR	CC 099.8521	VITRAMON	VJ1206 Y 103 K FAT	
C300	CC 100PF+-1%50V NPO 1206 CERAMIC CHIP CAPACITOR	CC 099.8415	VITRAMON	VJ1206 A 101 F FAT	
C301	CC 100PF+-2%6X9NP0 CAPACITOR	CC 087.6541	VALVO	2222 678 10101	
C302	CC 10NF+-10%50V X7R 1206 CERAMIC CHIP CAPACITOR	CC 099.8521	VITRAMON	VJ1206 Y 103 K FAT	
C310	CC 100PF+-1%50V NPO 1206 CERAMIC CHIP CAPACITOR	CC 099.8415	VITRAMON	VJ1206 A 101 F FAT	
C311	CC 5,6PF+-0,25PF50V NPO CERAMIC CHIP CAPACITOR	CC 007.8220	VITRAMON	VJ1206 A5R6 C FAT	
C312	CC 2,2NF+-10%50VX7R 1206 CERAMIC CHIP CAPACITOR	CC 099.8444	VITRAMON	VJ1206 Y 222 K FAT	
C313	CC 5,6PF+-0,25PF50V NPO CERAMIC CHIP CAPACITOR	CC 007.8220	VITRAMON	VJ1206 A5R6 C FAT	
C314	CC 5,6PF+-0,25PF50V NPO CERAMIC CHIP CAPACITOR	CC 007.8220	VITRAMON	VJ1206 A5R6 C FAT	
C315	CC 47PF+-1%50V COG 1206 CERAMIC CHIP CAPACITOR	CC 099.8496	VITRAMON	VJ1206 A 470 F FAT	
C316	CC 1NF+-1% 50V NPO 1206 CERAMIC CHIP CAPACITOR	CC 007.7398	VITRAMON	VJ1206 A 102 F FAT	
C317	CC 1NF+-10%63V K2000 CERAMIC CAPACITOR	CC 022.0784	VALVO	2222 63051 102	
C318	CE 2,2UF+-20%20V 5X 4X 7 ELECTROLYTIC CAPACITOR	CE 022.8104	ROEDERSTEI	ETR 1 2,2/20 20%	
C319	CC 1NF+-1% 50V NPO 1206 CERAMIC CHIP CAPACITOR	CC 007.7398	VITRAMON	VJ1206 A 102 F FAT	
C320	CC 10NF-20+50%7X8R4000 CAPACITOR	CC 087.7525	VALVO	2222 63051 64051103	
C321	CC 10NF-20+50%7X8R4000 CAPACITOR	CC 087.7525	VALVO	2222 63051 64051103	
C400	CE 4,7UF+-20%20V 7X 4X 8 ELECTROLYTIC CAPACITOR	CE 022.8110	ROEDERSTEI	ETR 2 4,7/20 20%	
C401	CC 1NF+-1% 50V NPO 1206 CERAMIC CHIP CAPACITOR	CC 007.7398	VITRAMON	VJ1206 A 102 F FAT	
C402	CE 100UF-10+50% 25V 13X13 ELECTROLYTIC CAPACITOR	CE 208.4007	ROEDERST	ELKOEK100/25	
C403	CC 10NF+-10%50V X7R 1206 CERAMIC CHIP CAPACITOR	CC 099.8521	VITRAMON	VJ1206 Y 103 K FAT	
C405	CE 15 UF+-20%20V 7X 5X11 ELECTROLYTIC CAPACITOR	CE 022.8127	ROEDERSTEI	ETR-3 15/20 20%	
C406	CC 10NF+-10%50V X7R 1206 CERAMIC CHIP CAPACITOR	CC 099.8521	VITRAMON	VJ1206 Y 103 K FAT	
C407	CC 10NF+-10%50V X7R 1206 CERAMIC CHIP CAPACITOR	CC 099.8521	VITRAMON	VJ1206 Y 103 K FAT	
C408	CC 10NF+-10%50V X7R 1206 CERAMIC CHIP CAPACITOR	CC 099.8521	VITRAMON	VJ1206 Y 103 K FAT	
C409	CC 10NF+-10%50V X7R 1206 CERAMIC CHIP CAPACITOR	CC 099.8521	VITRAMON	VJ1206 Y 103 K FAT	

Für diese Unterlage behalten wir alle Rechte vor

Kennz. Comp.No.	Benennung Designation	Sachnummer Stock No.	Hersteller Manufacturer	Bezeichnung Designation	enthalten in contained in
C500	CC 2,1PF0,25PF50VNP0 0805 CAPACITOR	CC 093.5550	VITRAMON	VJ0805A2R1CFA	
C501	CC 2,1PF0,25PF50VNP0 0805 CAPACITOR	CC 093.5550	VITRAMON	VJ0805A2R1CFA	
C502	CC 1,8PF+-0,25PF50V NPO CERAMIC CHIP CAPACITOR	CC 007.8165	VITRAMON	VJ1206 A 1R8 C FAT	
C503	CC 15PF+-1%50V NPO 1206 CERAMIC CHIP CAPACITOR	CC 099.8750	VITRAMON	VJ1206 A 150 F FAT	
C504	CC 1,8PF+-0,25PF50V NPO CERAMIC CHIP CAPACITOR	CC 007.8165	VITRAMON	VJ1206 A 1R8 C FAT	
C505	CC 100PF+-1%50V NPO 1206 CERAMIC CHIP CAPACITOR	CC 099.8415	VITRAMON	VJ1206 A 101 F FAT	
C506	CC 15PF+-1%50V NPO 1206 CERAMIC CHIP CAPACITOR	CC 099.8750	VITRAMON	VJ1206 A 150 F FAT	
C610	CC 1PF+-0,25PF50VNP0 0805 CHIP CAPACITOR	CC 099.6770	VITRAMON	VJ0805A1R0CFA	
C612	CC 1PF+-0,25PF50V NP01206 CERAMIC CHIP CAPACITOR	CC 099.8667	VITRAMON	VJ1206 A 1R0 C FAT	
C613	CC 1PF+-0,25PF50V NP01206 CERAMIC CHIP CAPACITOR	CC 099.8667	VITRAMON	VJ1206 A 1R0 C FAT	
C614	CC 10NF+-10%50V X7R 1206 CERAMIC CHIP CAPACITOR	CC 099.8521	VITRAMON	VJ1206 Y 103 K FAT	
C615	CC 1PF+-0,25PF50VNP0 0805 CHIP CAPACITOR	CC 099.6770	VITRAMON	VJ0805A1R0CFA	
C620	CC 1PF+-0,25PF50VNP0 0805 CHIP CAPACITOR	CC 099.6770	VITRAMON	VJ0805A1R0CFA	
C621	CC 1NF+-1% 50V NPO 1206 CERAMIC CHIP CAPACITOR	CC 007.7398	VITRAMON	VJ1206 A 102 F FAT	
C622	CC 10PF+-0,25PF50VNP01206 CERAMIC CHIP CAPACITOR	CC 099.8480	VITRAMON	VJ1206 A 100 C FAT	
C623	CC 1PF+-0,25PF50V NP01206 CERAMIC CHIP CAPACITOR	CC 099.8667	VITRAMON	VJ1206 A 1R0 C FAT	
C624	CC 10NF+-10%50V X7R 1206 CERAMIC CHIP CAPACITOR	CC 099.8521	VITRAMON	VJ1206 Y 103 K FAT	
C625	CC 1PF+-0,25PF50VNP0 0805 CHIP CAPACITOR	CC 099.6770	VITRAMON	VJ0805A1R0CFA	
C626	CC 10PF+-0,25PF50VNP01206 CERAMIC CHIP CAPACITOR	CC 099.8480	VITRAMON	VJ1206 A 100 C FAT	
C630	CC 1PF+-0,25PF50VNP0 0805 CHIP CAPACITOR	CC 099.6770	VITRAMON	VJ0805A1R0CFA	
C631	CC 1NF+-1% 50V NPO 1206 CERAMIC CHIP CAPACITOR	CC 007.7398	VITRAMON	VJ1206 A 102 F FAT	
C632	CC 10PF+-0,25PF50VNP01206 CERAMIC CHIP CAPACITOR	CC 099.8480	VITRAMON	VJ1206 A 100 C FAT	
C633	CC 1PF+-0,25PF50V NP01206 CERAMIC CHIP CAPACITOR	CC 099.8667	VITRAMON	VJ1206 A 1R0 C FAT	
C634	CC 10NF+-10%50V X7R 1206 CERAMIC CHIP CAPACITOR	CC 099.8521	VITRAMON	VJ1206 Y 103 K FAT	
C640	CC 1PF+-0,25PF50VNP0 0805 CHIP CAPACITOR	CC 099.6770	VITRAMON	VJ0805A1R0CFA	
C641	CC 10NF+-10%50V X7R 1206 CERAMIC CHIP CAPACITOR	CC 099.8521	VITRAMON	VJ1206 Y 103 K FAT	
C642	CC 10NF+-10%50V X7R 1206 CERAMIC CHIP CAPACITOR	CC 099.8521	VITRAMON	VJ1206 Y 103 K FAT	
C643	CC 1PF+-0,25PF50V NP01206 CERAMIC CHIP CAPACITOR	CC 099.8667	VITRAMON	VJ1206 A 1R0 C FAT	
C644	CC 10NF+-10%50V X7R 1206 CERAMIC CHIP CAPACITOR	CC 099.8521	VITRAMON	VJ1206 Y 103 K FAT	
C645	CC 1PF+-0,25PF50VNP0 0805 CHIP CAPACITOR	CC 099.6770	VITRAMON	VJ0805A1R0CFA	
C800	CC 10NF-20+50%7X8R4000 CAPACITOR	CC 087.7525	VALVO	2222 63051 64051103	
C801	CC 1NF+-1% 50V NPO 1206 CERAMIC CHIP CAPACITOR	CC 007.7398	VITRAMON	VJ1206 A 102 F FAT	
C802	CK 1UF+-10%50V5RM MKT CAPACITOR	CK 099.2998	WIMA	MKS2/50/1UF/10%	
C803	CC 10NF+-10%50V X7R 1206 CERAMIC CHIP CAPACITOR	CC 099.8521	VITRAMON	VJ1206 Y 103 K FAT	
C804	CK 1UF+-10%50V5RM MKT CAPACITOR	CK 099.2998	WIMA	MKS2/50/1UF/10%	
C805	CC 10NF-20+50%7X8R4000 CAPACITOR	CC 087.7525	VALVO	2222 63051 64051103	
C806	CC 2,2NF+-10%5X6R2000 CAPACITOR	CC 087.7060	VALVO	2222 63051 222	
C807	CC 33PF+-1%50V NPO 1206 CERAMIC CHIP CAPACITOR	CC 099.8780	VITRAMON	VJ1206 A330F FAT	
C810	CC 100NF+-10%50V X7R 1206 CERAMIC CHIP CAPACITOR	CC 007.5237	VITRAMON	VJ1206 Y 104 K FAT	

Kennz. Comp.No.	Benennung Designation	Sachnummer Stock No.	Hersteller Manufacturer	Bezeichnung Designation	enthalten in contained in
C830	CC 10NF+-10%50V X7R 1206 CERAMIC CHIP CAPACITOR	CC 099.8521	VITRAMON	VJ1206 Y 103 K FAT	
C900	CE 100UF-10+50% 25V 13X13 ELECTROLYTIC CAPACITOR	CE 208.4007	ROEDERST	ELKOEK100/25	
C901	CC 10NF+-10%50V X7R 1206 CERAMIC CHIP CAPACITOR	CC 099.8521	VITRAMON	VJ1206 Y 103 K FAT	
C902	CC 10NF+-10%50V X7R 1206 CERAMIC CHIP CAPACITOR	CC 099.8521	VITRAMON	VJ1206 Y 103 K FAT	
C903	CC 820PF+-1% 50V NPO 1206 CERAMIC CHIP CAPACITOR	CC 007.7381	VITRAMON	VJ1206 A 821 F FAT	
C904	CC 10NF+-10%50V X7R 1206 CERAMIC CHIP CAPACITOR	CC 099.8521	VITRAMON	VJ1206 Y 103 K FAT	
C905	CK 1UF+-10%50V5RM MKT CAPACITOR	CK 099.2998	WIMA	MKS2/50/1UF/10%	
C906	CE 47UF-10+50% 40V 9X13 ELECTROLYTIC CAPACITOR	CE 006.7142	ROEDERST	EK 00 CB 247 G	
C910	CC 10NF+-10%50V X7R 1206 CERAMIC CHIP CAPACITOR	CC 099.8521	VITRAMON	VJ1206 Y 103 K FAT	
C911	CC 100NF+-10%50V X7R 1206 CERAMIC CHIP CAPACITOR	CC 007.5237	VITRAMON	VJ1206 Y 104 K FAT	
C930	CC 10NF+-10%50V X7R 1206 CERAMIC CHIP CAPACITOR	CC 099.8521	VITRAMON	VJ1206 Y 103 K FAT	
C931	CC 100NF+-10%50V X7R 1206 CERAMIC CHIP CAPACITOR	CC 007.5237	VITRAMON	VJ1206 Y 104 K FAT	
C940	CC 10NF+-10%50V X7R 1206 CERAMIC CHIP CAPACITOR	CC 099.8521	VITRAMON	VJ1206 Y 103 K FAT	
C941	CC 100NF+-10%50V X7R 1206 CERAMIC CHIP CAPACITOR	CC 007.5237	VITRAMON	VJ1206 Y 104 K FAT	
D150	BL PC74HCT377T 8XD-FF EN OCTAL D-TYPE FLIPFLOP	BL 007.6679	VALVO	PC74HCT377T	
D800	BL PC74HCT74T 2XD-FLIPFL DUAL D-TYPE FLIP FLOP	BL 007.6262	VALVO	PC74HCT74T	
L3	LD 2,20UH10%0,400HMO,415A CHOKE	LD 067.2905	DELEVAN	DROSSEL1025-28	
L4	LD 2,20UH10%0,400HMO,415A CHOKE	LD 067.2905	DELEVAN	DROSSEL1025-28	
L5	LD 2,20UH10%0,400HMO,415A CHOKE	LD 067.2905	DELEVAN	DROSSEL1025-28	
L10	LF ROHRK.RD3,6XRD1,2XL3,3 TUBULAR CORE FUER V10	LF 026.9286			
L12	LD 2,20UH10%0,400HMO,415A CHOKE	LD 067.2905	DELEVAN	DROSSEL1025-28	
L24	LD 0,47UH10%0,350HMO,660A CHOKE	LD 067.2828	DELEVAN	DROSSEL1025-12	
L44	LD 2,20UH10%0,400HMO,415A CHOKE	LD 067.2905	DELEVAN	DROSSEL1025-28	
L45	LD 100NH 10% 0,080HM 1,4A CHOKE	LD 067.2740	DELEVAN	DROSSEL1025-94	
L50	LL RESONATOR RESONATOR	848.3636			848.3536
L52	LL RESONATOR RESONATOR	848.3636			848.3536
L54	LL RESONATOR RESONATOR	848.3636			848.3536
L56	LL RESONATOR RESONATOR	848.3636			848.3536
L58	LL RESONATOR RESONATOR	848.3636			848.3536
L60	LL RESONATOR RESONATOR	848.3636			848.3536
L62	LL RESONATOR RESONATOR	848.3636			848.3536
L75	LD 0,39UH10%0,300HMO,710A CHOKE	LD 067.2811	DELEVAN	DROSSEL1025-10	
L76	LD 0,56UH10%0,500HMO,550A CHOKE	LD 067.2834	DELEVAN	DROSSEL1025-14	
L78	LD 0,68UH10%0,600HMO,500A CHOKE	LD 067.2840	DELEVAN	DROSSEL1025-16	
L81	LD 0,18UH10%0,120HM1,120A CHOKE	LD 067.2770	DELEVAN	DROSSEL1025-02	
L82	LD 100NH 10% 0,080HM 1,4A CHOKE	LD 067.2740	DELEVAN	DROSSEL1025-94	
L94	LD 2,20UH10%0,400HMO,415A CHOKE	LD 067.2905	DELEVAN	DROSSEL1025-28	

Für diese Unterlage behalten wir ... alle Rechte vor

Kennz. Comp.No.	Benennung Designation	Sachnummer Stock No.	Hersteller Manufacturer	Bezeichnung Designation	enthalten in contained in
L95	LD 2,20UH10%0,400HM0,415A CHOKE	LD 067.2905	DELEVAN	DROSSEL1025-28	
L96	LD SPULE 53NH 2,5W FE-K CHOKE	300.6653	COMPONEX	E521HN-020023	
L100	LF ROHRK.RD3,5X1,2X3 GETR TUBLAR CORE	LF 026.9257			
L101	LF ROHRK.RD3,5X1,2X3 GETR TUBLAR CORE FUER V110, V111	LF 026.9257			
L102	LF ROHRK.RD3,6XRD1,2XL3,3 TUBULAR CORE	LF 026.9286			
L110	LD SPULE 53NH 2,5W FE-K CHOKE	300.6653	COMPONEX	E521HN-020023	
L111	LD 0,82UH10%0,850HM0,420A CHOKE	LD 067.2857	DELEVAN	DROSSEL1025-18	
L112	LD 2,20UH10%0,400HM0,415A CHOKE	LD 067.2905	DELEVAN	DROSSEL1025-28	
L120	LD 0,047 UH 10% CHOKE	249.5995	INDUSTRIA	BAUREIHE1025,0,047	
L160	LD 0,82UH10%0,850HM0,420A CHOKE	LD 067.2857	DELEVAN	DROSSEL1025-18	
L161	LD 0,82UH10%0,850HM0,420A CHOKE	LD 067.2857	DELEVAN	DROSSEL1025-18	
L200	LD 100NH 10% 0,080HM 1,4A CHOKE	LD 067.2740	DELEVAN	DROSSEL1025-94	
L201	LD 100NH 10% 0,080HM 1,4A CHOKE	LD 067.2740	DELEVAN	DROSSEL1025-94	
L203	LD 2,20UH10%0,400HM0,415A CHOKE	LD 067.2905	DELEVAN	DROSSEL1025-28	
L210	LD 2,20UH10%0,400HM0,415A CHOKE	LD 067.2905	DELEVAN	DROSSEL1025-28	
L230	LC 92NH 10% D8/4,6L17 CERAMIC COIL	848.4478	STETTNER	508702762	
L231	LC 92NH 10% D8/4,6L17 CERAMIC COIL	848.4478	STETTNER	508702762	
L300	LD 2,2UH10%0R2 0,05A1206 SMD MULTILAYER INDUCTOR	379.6578	TOKO	MLF321611A2R2K	
L310	LD 0,047 UH 10% CHOKE	249.5995	INDUSTRIA	BAUREIHE1025,0,047	
L311	LD 0,047 UH 10% CHOKE	249.5995	INDUSTRIA	BAUREIHE1025,0,047	
L312	LD 2,20UH10%0,400HM0,415A CHOKE	LD 067.2905	DELEVAN	DROSSEL1025-28	
L313	LD 1,00UH10%1,000HM0,390A CHOKE	LD 067.2863	DELEVAN	1025-20	
L314	LD 1,00UH10%1,000HM0,390A CHOKE	LD 067.2863	DELEVAN	1025-20	
L315	LD 0,047 UH 10% CHOKE	249.5995	INDUSTRIA	BAUREIHE1025,0,047	
L316	LD 0,047 UH 10% CHOKE	249.5995	INDUSTRIA	BAUREIHE1025,0,047	
L350	LD 1,00UH10%1,000HM0,390A CHOKE	LD 067.2863	DELEVAN	1025-20	
L400	LD 0,82UH10%0,850HM0,420A CHOKE	LD 067.2857	DELEVAN	DROSSEL1025-18	
L401	LD 0,82UH10%0,850HM0,420A CHOKE	LD 067.2857	DELEVAN	DROSSEL1025-18	
L402	LD 0,82UH10%0,850HM0,420A CHOKE	LD 067.2857	DELEVAN	DROSSEL1025-18	
L610	LD 100NH 10% 0,080HM 1,4A CHOKE	LD 067.2740	DELEVAN	DROSSEL1025-94	
L611	LD 100NH 10% 0,080HM 1,4A CHOKE	LD 067.2740	DELEVAN	DROSSEL1025-94	
L620	LD 100NH 10% 0,080HM 1,4A CHOKE	LD 067.2740	DELEVAN	DROSSEL1025-94	
L621	LD 100NH 10% 0,080HM 1,4A CHOKE	LD 067.2740	DELEVAN	DROSSEL1025-94	
L630	LD 100NH 10% 0,080HM 1,4A CHOKE	LD 067.2740	DELEVAN	DROSSEL1025-94	
L631	LD 100NH 10% 0,080HM 1,4A CHOKE	LD 067.2740	DELEVAN	DROSSEL1025-94	
L640	LD 100NH 10% 0,080HM 1,4A CHOKE	LD 067.2740	DELEVAN	DROSSEL1025-94	
L641	LD 100NH 10% 0,080HM 1,4A CHOKE	LD 067.2740	DELEVAN	DROSSEL1025-94	
L700	LD 0,82UH10%0,850HM0,420A CHOKE	LD 067.2857	DELEVAN	DROSSEL1025-18	

Kennz. Comp.No.	Benennung Designation	Sachnummer Stock No.	Hersteller Manufacturer	Bezeichnung Designation	enthalten in contained in
L800	LD 1,00UH10%1,000HMO,390A CHOKE	LD 067.2863	DELEVAN	1025-20	
N70	BM SRA1H MIXER 0.5GHZ MIXER	BM 252.5234	MCL	SRA1H	
N150	BO LM224D 4XL.P.OPAMP OPERATIONAL AMPLIFIER	007.7852	SIGNETICS	LM224D	
N200	BM MSA0486 DC-3.2G MMIC BROADBAND AMPLIFIER	846.4293	AVANTEK	MSA0486	
N300	BM MSA0386 DC-2.4G MMIC BROAD-BAND AMPLIFIER	848.4461	AVANTEK	MSA0386	
N800	BO TL074ACD 4XFET OPAMP OPERATIONAL AMPLIFIER	007.7823	TEXAS INST	TL074ACD	
N900	BO LM224D 4XL.P.OPAMP OPERATIONAL AMPLIFIER	007.7852	SIGNETICS	LM224D	
R1	RG 3,92KOHM+-1%TK100 1206 RESISTOR CHIP	RG 007.5808	DALE	CRCW1206-10 3K92 F-T	
R2	RG 3,92KOHM+-1%TK100 1206 RESISTOR CHIP	RG 007.5808	DALE	CRCW1206-10 3K92 F-T	
R3	RG 332 OHM+-1%TK100 1206 RESISTOR CHIP	RG 007.5650	DALE	CRCW1206-10 332R F-T	
R4	RL 0,35W 332 OHM+-1%TK50 RESISTOR	RL 083.0255	DRALORIC	SMA0207/332OHM-F-D	
R6	RG 3,92KOHM+-1%TK100 1206 RESISTOR CHIP	RG 007.5808	DALE	CRCW1206-10 3K92 F-T	
R12	RL 0,35W 475 OHM+-1%TK50 RESISTOR	RL 083.0390	DRALORIC	SMA0207/475OHM-F-D	
R13	RG 10 KOHM+-1%TK100 1206 CHIP RESISTOR	RG 007.0793	DALE	CRCW1206-10 10K F-T	
R14	RG 5,62KOHM+-1%TK100 1206 CHIP RESISTOR	RG 007.0735	DALE	CRCW1206-10 5K62 F-T	
R15	RG 5,62KOHM+-1%TK100 1206 CHIP RESISTOR	RG 007.0735	DALE	CRCW1206-10 5K62 F-T	
R20	RG 33,2 OHM+-1%TK100 1206 RESISTOR CHIP	RG 007.5520	DALE	CRCW1206-10 33R2 F-T	
R21	RG 150 OHM+-1%TK100 1206 RESISTOR CHIP	RG 007.5589	DALE	CRCW1206-10 150R F-T	
R22	RG 150 OHM+-1%TK100 1206 RESISTOR CHIP	RG 007.5589	DALE	CRCW1206-10 150R F-T	
R23	RG 3,92KOHM+-1%TK100 1206 RESISTOR CHIP	RG 007.5808	DALE	CRCW1206-10 3K92 F-T	
R24	RG 3,92KOHM+-1%TK100 1206 RESISTOR CHIP	RG 007.5808	DALE	CRCW1206-10 3K92 F-T	
R30	RG 33,2 OHM+-1%TK100 1206 RESISTOR CHIP	RG 007.5520	DALE	CRCW1206-10 33R2 F-T	
R31	RG 33,2 OHM+-1%TK100 1206 RESISTOR CHIP	RG 007.5520	DALE	CRCW1206-10 33R2 F-T	
R32	RG 3,92KOHM+-1%TK100 1206 RESISTOR CHIP	RG 007.5808	DALE	CRCW1206-10 3K92 F-T	
R33	RG 3,92KOHM+-1%TK100 1206 RESISTOR CHIP	RG 007.5808	DALE	CRCW1206-10 3K92 F-T	
R34	RG 18,2 OHM+-1%TK100 1206 RESISTOR CHIP	RG 007.5466	DALE	CRW1206-10 18R2 F-T	
R35	RS 0,5W 20 OHM+-20%CERMET RS 0.5W 20 OHM+-20%CERMET	RS 083.5763	BOURNS	3329H-1-200	
R41	RG 5,62KOHM+-1%TK100 1206 CHIP RESISTOR	RG 007.0735	DALE	CRCW1206-10 5K62 F-T	
R42	RG 392 OHM+-1%TK100 1206 RESISTOR CHIP	RG 007.5672	DALE	CRCW1206-10 392R F-T	
R43	RG 5,62KOHM+-1%TK100 1206 CHIP RESISTOR	RG 007.0735	DALE	CRCW1206-10 5K62 F-T	
R44	RG 10 KOHM+-1%TK100 1206 CHIP RESISTOR	RG 007.0793	DALE	CRCW1206-10 10K F-T	
R45	RL 0,35W 274 OHM+-1%TK50 RESISTOR	RL 083.0178	DRALORIC	SMA0207/274OHM-F-D	
R46	RG 475 OHM+-1%TK100 1206 RESISTOR CHIP	RG 007.5695	DALE	CRCW1206-10 475R F-T	
R47	RG 12,1 OHM+-1%TK100 1206 CHIP RESISTOR	RG 006.8661	DALE	CRCW1206-10 12R1 F-T	
R48	RG 12,1 OHM+-1%TK100 1206 CHIP RESISTOR	RG 006.8661	DALE	CRCW1206-10 12R1 F-T	
R49	RG 10,0 OHM+-1%TK100 1206 CHIP -RESISTOR	RG 006.8649	DALE	CRCW1206-10 10R F-T	
R82	RG 51,1 OHM+-1%TK100 1206 CHIP RESISTOR	RG 006.8810	DALE	CRCW1206 51,10HM F T	
R90	RG 39,2KOHM+-1%TK100 1206 RESISTOR CHIP	RG 007.5937	DALE	CRCW1206-10 39K2 F-T	

Für diese Unterlage behalten wir uns alle Rechte vor

Kennz. Comp.No.	Benennung Designation	Sachnummer Stock No.	Hersteller Manufacturer	Bezeichnung Designation	enthalten in contained in
R91	RG 56,2KOHM+-1%TK100 1206 CHIP RESISTOR	RG 007.1883	DALE	CRCW1206-10 56K2 F-T	
R92	RG 56,2KOHM+-1%TK100 1206 CHIP RESISTOR	RG 007.1883	DALE	CRCW1206-10 56K2 F-T	
R93	RL 0,35W 274 OHM+-1%TK50 RESISTOR	RL 083.0178	DRALORIC	SMA0207/274OHM-F-D	
R94	RG 18,2 OHM+-1%TK100 1206 RESISTOR CHIP	RG 007.5466	DALE	CRW1206-10 18R2 F-T	
R95	RG 274 OHM+-1%TK100 1206 RESISTOR CHIP	RG 007.5637	DALE	CRCW1206-10 274R F-T	
R110	RG 56,2 OHM+-1%TK100 1206 CHIP RESISTOR	RG 006.8826	DALE	CRCW1206-10 56R2 F-T	
R111	RG 6,81KOHM+-1%TK100 1206 CHIP RESISTOR	RG 007.0758	DALE	CRCW1206-10 6K81 F-T	
R112	RG 3,92KOHM+-1%TK100 1206 RESISTOR CHIP	RG 007.5808	DALE	CRCW1206-10 3K92 F-T	
R113	RG 3,92KOHM+-1%TK100 1206 RESISTOR CHIP	RG 007.5808	DALE	CRCW1206-10 3K92 F-T	
R115	RG 332 OHM+-1%TK100 1206 RESISTOR CHIP	RG 007.5650	DALE	CRCW1206-10 332R F-T	
R116	RG 22,1 OHM+-1%TK100 1206 RESISTOR CHIP	RG 007.5489	DALE	CRW1206-10 22R1 F-T	
R117	RG 182 OHM+-1%TK100 1206 RESISTOR CHIP	RG 007.5595	DALE	CRCW1206-10 182R F-T	
R118	RG 33,2 OHM+-1%TK100 1206 RESISTOR CHIP	RG 007.5520	DALE	CRCW1206-10 33R2 F-T	
R119	RG 182 OHM+-1%TK100 1206 RESISTOR CHIP	RG 007.5595	DALE	CRCW1206-10 182R F-T	
R120	RG 4,75KOHM+-1%TK100 1206 RESISTOR CHIP	RG 007.5820	DALE	CRCW1206-10 4K75 F-T	
R121	RG 5,62KOHM+-1%TK100 1206 CHIP RESISTOR	RG 007.0735	DALE	CRCW1206-10 5K62 F-T	
R122	RL 0,35W 100 OHM+-1%TK50 RESISTOR	RL 082.6543	DRALORIC	SMA0207/100/HM-F-D	
R123	RG 4,75KOHM+-1%TK100 1206 RESISTOR CHIP	RG 007.5820	DALE	CRCW1206-10 4K75 F-T	
R124	RG 5,62KOHM+-1%TK100 1206 CHIP RESISTOR	RG 007.0735	DALE	CRCW1206-10 5K62 F-T	
R125	RG 82,5 OHM+-1%TK100 1206 CHIP RESISTOR	RG 006.8861	DALE	CRCW1206-10 82R5 F-T	
R128	RG 33,2 OHM+-1%TK100 1206 RESISTOR CHIP	RG 007.5520	DALE	CRCW1206-10 33R2 F-T	
R129	RG 22,1 OHM+-1%TK100 1206 RESISTOR CHIP	RG 007.5489	DALE	CRW1206-10 22R1 F-T	
R150 ..153	RL 0,35W 4,75KOHM+-1%TK50 RESISTOR	RL 083.1097	DRALORIC	SMA0207/4,75K-F-D	
R155	RL 0,35W 8,25KOHM+-1%TK50 RESISTOR	RL 083.1239	DRALORIC	SMA0207/8,25K-F-D	
R156	RL 0,35W 68,1KOHM+-1%TK50 RESISTOR	RL 082.2602	DRALORIC	SMA 0207/68,1K-F-C	
R200	RG 200 OHM+-1%TK100 1206 RESISTOR CHIP	RG 007.5608	DALE	CRCW1206-10 200R F-T	
R201	RL 0,21W 47,5 OHM+-1%TK50 RESISTOR	RL 092.1267	RESISTA	MK1 47,5OHM 1% TK50	
R202	RG 274 OHM+-1%TK100 1206 RESISTOR CHIP	RG 007.5637	DALE	CRCW1206-10 274R F-T	
R203	RS 0,5W100 OHM+-20%CERMET DEPOS.-CARBON POTENTIOMET	RS 087.0172	BOURNS	3329X-1 101	
R204	RG 100 OHM+-1%TK100 1206 CHIP RESISTOR	RG 006.8884	DALE	CRCW1206-10 100R F-T	
R205	RG 274 OHM+-1%TK100 1206 RESISTOR CHIP	RG 007.5637	DALE	CRCW1206-10 274R F-T	
R206	RL 0,35W 61,9 OHM+-1%TK50 RESISTOR	RL 082.9607	DRALORIC	SMA0207/61,9OHM-F-D	
R207	RL 0,35W 121 OHM+-1%TK50 RESISTOR	RL 082.9859	DRALORIC	SMA0207/121OHM-F-D	
R210	RG 51,1 OHM+-1%TK100 1206 CHIP RESISTOR	RG 006.8810	DALE	CRCW1206 51,1OHM F T	
R303	RG 100 OHM+-1%TK100 1206 CHIP RESISTOR	RG 006.8884	DALE	CRCW1206-10 100R F-T	
R304	RL 0,35W 137 OHM+-1%TK50 RESISTOR	RL 082.9907	DRALORIC	SMA 0207/137OHM-F	
R310	RL 0,35W 511 OHM+-1%TK50 RESISTOR	RL 083.0426	DRALORIC	SMA0207/511OHM-F-D	
R311	RG 16,2 OHM+-1%TK100 1206 CHIP RESISTOR	RG 006.8690	DALE	CRCW1206-10 16R2 F-T	
R312	RG 12,1 OHM+-1%TK100 1206 CHIP RESISTOR	RG 006.8661	DALE	CRCW1206-10 12R1 F-T	

Kennz. Comp.No.	Benennung Designation	Sachnummer Stock No.	Hersteller Manufacturer	Bezeichnung Designation	enthalten in contained in
R313	RL 0,35W 2,74KOHM+-1%TK50 RESISTOR	RL 083.0926	DRALORIC	SMA0207/2,74K-F-D	
R314	RG 20,0 OHM+-1%TK100 1206 RESISTOR CHIP	RG 007.5472	DALE	CRW1206-10 20R F-T	
R315	RL 0,35W 47,5 OHM+-1%TK50 RESISTOR	RL 082.9507	DRALORIC	SMA0207/47,50HM-F-D	
R317	RL 0,35W 33,2 OHM+-1%TK50 RESISTOR	RL 082.9359	DRALORIC	SMA0207/33,20HM-F-D	
R318	RG 3,01KOHM+-1%TK100 1206 RESISTOR CHIP	RG 007.5772	DALE	CRCW1206-10 3K01 F-T	
R319	RG 10 KOHM+-1%TK100 1206 CHIP RESISTOR	RG 007.0793	DALE	CRCW1206-10 10K F-T	
R400	RL 0,35W 1KOHM+-1%TK50 RESISTOR	RL 082.2160	DRALORIC	SMA0207/1K-F-C	
R401	RL 0,35W 1KOHM+-1%TK50 RESISTOR	RL 082.2160	DRALORIC	SMA0207/1K-F-C	
R500	RG 475 OHM+-1%TK100 1206 RESISTOR CHIP	RG 007.5695	DALE	CRCW1206-10 475R F-T	
R501	RG 10,0 OHM+-1%TK100 1206 CHIP -RESISTOR	RG 006.8649	DALE	CRCW1206-10 10R F-T	
R502	RG 475 OHM+-1%TK100 1206 RESISTOR CHIP	RG 007.5695	DALE	CRCW1206-10 475R F-T	
R503	RG 511 OHM+-1%TK100 1206 CHIP RESISTOR	RG 006.9051	DALE	CRCW1206-10 511R F-T	
R610	RG 475 OHM+-1%TK100 1206 RESISTOR CHIP	RG 007.5695	DALE	CRCW1206-10 475R F-T	
R611	RG 0,05W 10 OHM+-1% 0805 RESISTOR	RG 007.8888	HONEST JAP	MR 08 M 10R 1% 0805	
R612	RG 475 OHM+-1%TK100 1206 RESISTOR CHIP	RG 007 5695	DALE	CRCW1206-10 475R F-T	
R616	RG 100 OHM+-1%TK100 1206 CHIP RESISTOR	RG 006.8884	DALE	CRCW1206-10 100R F-T	
R620	RG 475 OHM+-1%TK100 1206 RESISTOR CHIP	RG 007.5695	DALE	CRCW1206-10 475R F-T	
R621	RG 10,0 OHM+-1%TK100 1206 CHIP -RESISTOR	RG 006.8649	DALE	CRCW1206-10 10R F-T	
R622	RG 475 OHM+-1%TK100 1206 RESISTOR CHIP	RG 007.5695	DALE	CRCW1206-10 475R F-T	
R623	RG 100 OHM+-1%TK100 1206 CHIP RESISTOR	RG 006.8884	DALE	CRCW1206-10 100R F-T	
R640	RG 475 OHM+-1%TK100 1206 RESISTOR CHIP	RG 007.5695	DALE	CRCW1206-10 475R F-T	
R641	RG 10,0 OHM+-1%TK100 1206 CHIP -RESISTOR	RG 006.8649	DALE	CRCW1206-10 10R F-T	
R642	RG 475 OHM+-1%TK100 1206 RESISTOR CHIP	RG 007.5695	DALE	CRCW1206-10 475R F-T	
R643	RG 100 OHM+-1%TK100 1206 CHIP RESISTOR	RG 006.8884	DALE	CRCW1206-10 100R F-T	
R700	RL 0,35W 1KOHM+-1%TK50 RESISTOR	RL 082.2160	DRALORIC	SMA0207/1K-F-C	
R701	RG 100 OHM+-1%TK100 1206 CHIP RESISTOR	RG 006.8884	DALE	CRCW1206-10 100R F-T	
R702	RG 121 OHM+-1%TK100 1206 CHIP RESISTOR	RG 006.8903	DALE	CRCW1206-10 121R F-T	
R703	RG 39,2 OHM+-1%TK100 1206 RESISTOR CHIP	RG 007.5543	DALE	CRCW1206-10 39R2 F-T	
R704	RG 121 OHM+-1%TK100 1206 CHIP RESISTOR	RG 006.8903	DALE	CRCW1206-10 121R F-T	
R705	RG 100 OHM+-1%TK100 1206 CHIP RESISTOR	RG 006.8884	DALE	CRCW1206-10 100R F-T	
R707	RG 100 OHM+-1%TK100 1206 CHIP RESISTOR	RG 006.8884	DALE	CRCW1206-10 100R F-T	
R800	RG 0-OHM WIDERSTAND-CHIP RESISTOR CHIP 0-OHM	RG 007.5108	DALE	CRCW1206-10 0R F-T	
R801	RG 10 KOHM+-1%TK100 1206 CHIP RESISTOR	RG 007.0793	DALE	CRCW1206-10 10K F-T	
R802	RG 10 KOHM+-1%TK100 1206 CHIP RESISTOR	RG 007.0793	DALE	CRCW1206-10 10K F-T	
R803	RG 27,4KOHM+-1%TK100 1206 RESISTOR CHIP	RG 007.5895	DALE	CRCW1206-10 27K4 F-T	
R804	RG 2,0 KOHM+-1%TK100 1206 RESISTOR CHIP	RG 007.5737	DALE	CRCW1206-10 2K F-T	
R805	RG 10 KOHM+-1%TK100 1206 CHIP RESISTOR	RG 007.0793	DALE	CRCW1206-10 10K F-T	
R806	RL 0,35W 2,00KOHM+-1%TK50 RESISTOR	RL 083.0826	DRALORIC	SMA0207/2,00K-F-D	
R807	RL 0,35W 221 OHM+-1%TK50 RESISTOR	RL 083.0084	DRALORIC	SMA0207/221OHM-F-D	

Für diese Unterlage behalten wir alle Rechte vor

Kennz. Comp.No.	Benennung Designation	Sachnummer Stock No.	Hersteller Manufacturer	Bezeichnung Designation	enthalten in contained in
R808	RG 10 KOHM+-1%TK100 1206 CHIP RESISTOR	RG 007.0793	DALE	CRCW1206-10 10K F-T	
R809	RL 0,35W 4,75KOHM+-1%TK50 RESISTOR	RL 083.1097	DRALORIC	SMA0207/4,75K-F-D	
R810	RL 0,35W 1KOHM+-1%TK50 RESISTOR	RL 082.2160	DRALORIC	SMA0207/1K-F-C	
R811	RG 1000 OHM+-1%TK100 1206 CHIP RESISTOR	RG 006.7271	DALE	CRCW1206-10 1K F-T	
R815	RG 9,09KOHM+-1%TK100 1206 CHIP RESISTOR	RG 007.0787	DALE	CRCW1206-10 9K09 F-T	
R816	RL 0,35W 2,00KOHM+-1%TK50 RESISTOR	RL 083.0826	DRALORIC	SMA0207/2,00K-F-D	
R817	RG 1000 OHM+-1%TK100 1206 CHIP RESISTOR	RG 006.7271	DALE	CRCW1206-10 1K F-T	
R818	RL 0,35W 100KOHM+-1%TK50 RESISTOR	RL 082.1764	DRALORIC	SMA0207/100K-F-C	
R819	RG 2,0 KOHM+-1%TK100 1206 RESISTOR CHIP	RG 007.5737	DALE	CRCW1206-10 2K F-T	
R820	RG 332 KOHM+-1%TK100 1206 RESISTOR CHIP	RG 007.6033	DALE	CRCW1206-10 332K F-T	
R821	RS 0,3W 20KOHM+-10%CERMET TRIMMING POTENTIOMETER	RS 006.9151	BECKMAN	67W 20KOHM 10%	
R822	RG 2,0 KOHM+-1%TK100 1206 RESISTOR CHIP	RG 007.5737	DALE	CRCW1206-10 2K F-T	
R830	RG 1000 OHM+-1%TK100 1206 CHIP RESISTOR	RG 006.7271	DALE	CRCW1206-10 1K F-T	
R831	RG 1000 OHM+-1%TK100 1206 CHIP RESISTOR	RG 006.7271	DALE	CRCW1206-10 1K F-T	
R832	RG 100 OHM+-1%TK100 1206 CHIP RESISTOR	RG 006.8884	DALE	CRCW1206-10 100R F-T	
R900	RG 12,1KOHM+-1%TK100 1206 CHIP RESISTOR	RG 007.0841	DALE	CRCW1206-10 12K1 F-T	
R901	RG 27,4KOHM+-1%TK100 1206 RESISTOR CHIP	RG 007.5895	DALE	CRCW1206-10 27K4 F-T	
R902	RL 0,35W 1KOHM+-1%TK50 RESISTOR	RL 082.2160	DRALORIC	SMA0207/1K-F-C	
R903	RL 0,35W 15,0KOHM+-1%TK50 RESISTOR	RL 083.1400	DRALORIC	SMA0207/15K-F-D	
R904	RG 12,1KOHM+-1%TK100 1206 CHIP RESISTOR	RG 007.0841	DALE	CRCW1206-10 12K1 F-T	
R905	RG 15,0KOHM+-1%TK100 1206 RESISTOR CHIP	RG 007.5843	DALE	CRCW1206-10 15K F-T	
R906	RG 2,21KOHM+-1%TK100 1206 RESISTOR CHIP	RG 007.5743	DALE	CRCW1206-10 2K21 F-T	
R907	RL 0,35W 12,1KOHM+-1%TK50 RESISTOR	RL 083.1351	DRALORIC	SMA0207/12,1K-F-D	
R910	RG 200 OHM+-1%TK100 1206 RESISTOR CHIP	RG 007.5608	DALE	CRCW1206-10 200R F-T	
R911	RG 22,1KOHM+-1%TK100 1206 RESISTOR CHIP	RG 007.5872	DALE	CRCW1206-10 22K1 F-T	
R912	RG 22,1KOHM+-1%TK100 1206 RESISTOR CHIP	RG 007.5872	DALE	CRCW1206-10 22K1 F-T	
R913	RG 33,2KOHM+-1%TK100 1206 RESISTOR CHIP	RG 007.5914	DALE	CRCW1206-10 33K2 F-T	
R914	RG 10 KOHM+-1%TK100 1206 CHIP RESISTOR	RG 007.0793	DALE	CRCW1206-10 10K F-T	
R915	RG 200 OHM+-1%TK100 1206 RESISTOR CHIP	RG 007.5608	DALE	CRCW1206-10 200R F-T	
R920	RL 0,35W 75,0 OHM+-1%TK50 RESISTOR	RL 082.9665	DRALORIC	SMA0207/750HM-F-D	
R930	RG 200 OHM+-1%TK100 1206 RESISTOR CHIP	RG 007.5608	DALE	CRCW1206-10 200R F-T	
R931	RG 22,1KOHM+-1%TK100 1206 RESISTOR CHIP	RG 007.5872	DALE	CRCW1206-10 22K1 F-T	
R932	RG 22,1KOHM+-1%TK100 1206 RESISTOR CHIP	RG 007.5872	DALE	CRCW1206-10 22K1 F-T	
R933	RG 33,2KOHM+-1%TK100 1206 RESISTOR CHIP	RG 007.5914	DALE	CRCW1206-10 33K2 F-T	
R934	RG 10 KOHM+-1%TK100 1206 CHIP RESISTOR	RG 007.0793	DALE	CRCW1206-10 10K F-T	
R935	RG 200 OHM+-1%TK100 1206 RESISTOR CHIP	RG 007.5608	DALE	CRCW1206-10 200R F-T	
R940	RL 0,35W27,40 OHM+-1%TK50 RESISTOR	RL 082.9271	DRALORIC	SMA0207/27,40HM-F-D	
R941	RG 5,62KOHM+-1%TK100 1206 CHIP RESISTOR	RG 007.0735	DALE	CRCW1206-10 5K62 F-T	
R942	RG 22,1KOHM+-1%TK100 1206 RESISTOR CHIP	RG 007.5872	DALE	CRCW1206-10 22K1 F-T	

Kennz. Comp.No.	Benennung Designation	Sachnummer Stock No.	Hersteller Manufacturer	Bezeichnung Designation	enthalten in contained in
R943	RG 33,2KOHM+-1%TK100 1206 RESISTOR CHIP	RG 007.5914	DALE	CRCW1206-10 33K2 F-T	
R944	RG 10 KOHM+-1%TK100 1206 CHIP RESISTOR	RG 007.0793	DALE	CRCW1206-10 10K F-T	
T10	LU UEBERTRAGER 5:1	848.3565			
T11	LU UEBERTRAGER 5:1	848.3565			
T110	LU UEBERTRAGER TRANSFORMER	451.1937			
T200	LU UEBERTRAGER TRANSFORMER	451.1937			
T202	LU UEBERTRAGER	848.3571			
V1 ..4	AE BA483 BER.SCH.DI.UHF DIODE	AE 568.2290	VALVO	BA483	
V10	AK NE85632 N 12V 100MA TRANSISTOR	354.6839	NEC	NE85632	
V13	AK BC560B P 45V 100MA TRANSISTOR	AK 007.2044	SIEMENS	BC560B GURT.POL.CBE	
V24	AE BA483 BER.SCH.DI.UHF DIODE	AE 568.2290	VALVO	BA483	
V25	AE BA483 BER.SCH.DI.UHF DIODE	AE 568.2290	VALVO	BA483	
V30	AE BA483 BER.SCH.DI.UHF DIODE	AE 568.2290	VALVO	BA483	
V31	AE BA483 BER.SCH.DI.UHF DIODE	AE 568.2290	VALVO	BA483	
V42	AK NE85637 N 12V 100MA TRANSISTOR	801.8231	NEC	NE85637	
V45	AK BC560B P 45V 100MA TRANSISTOR	AK 007.2044	SIEMENS	BC560B GURT.POL.CBE	
V91	AM BF982 N-D DG.MOSF DUALGATE MOSFET	303.6054	VALVO	BF982	
V110	AK BF374 N 25V 100MA TRANSISTOR	377.3859	MOTOROLA	BF374	
V111	AK BF374 N 25V 100MA TRANSISTOR	377.3859	MOTOROLA	BF374	
V112	AK BFR96S N 15V 100MA TRANSISTOR	644.0830	VALVO	BFR96S	
V113	AK BFR96S N 15V 100MA TRANSISTOR	644.0830	VALVO	BFR96S	
V210	AE 5082-2800 SCHOTTKY DIODE	AE 012.9066	HEWLETT-P.	5082-2800	
V211	AE 5082-2800 SCHOTTKY DIODE	AE 012.9066	HEWLETT-P.	5082-2800	
V310	AK BFR96S N 15V 100MA TRANSISTOR	644.0830	VALVO	BFR96S	
V311	AK BCY79IX P 45V 200MA TRANSISTOR	AK 010.3777	VALVO	BCY79IX	
V400	AK BC337-40 N 45V 800MA TRANSISTOR	AK 815.7684	VALVO	BC337-40GEGURTET	
V401	AK BC337-40 N 45V 800MA TRANSISTOR	AK 815.7684	VALVO	BC337-40GEGURTET	
V402	AD 1N4448 75V 0A15 UDI DIODE	AD 012.0700	TEXAS INST	1N4448 GEGURTET	
V500	AE 5082-0840 15V STEPRDI DIODE	AE 300.6830	HEWLETT-P.	5082-0840	
V610	AM AT12535 5V GAASFET GAAS-FET	848.3713	AVANTEK	ATF-25735	
V620	AM AT12535 5V GAASFET GAAS-FET	848.3713	AVANTEK	ATF-25735	
V630	AM AT12535 5V GAASFET GAAS-FET	848.3713	AVANTEK	ATF-25735	
V640	AM FSX52WF 12V GAASFET GAAS FET	806.8998	FUJITSU	FSX52WF	
V700	AE 5082-2835 SCHOTTKY DIODE	AE 263.8430	HEWLETT-P.	5082-2835	
V800	AE BZX55/B5V1 0,5W ZDI ZENER DIODE	AE 262.5837	VALVO	BZX55/B5V1	
V801	AD 1N4448 75V 0A15 UDI DIODE	AD 012.0700	TEXAS INST	1N4448 GEGURTET	
V802	AD 1N4448 75V 0A15 UDI DIODE	AD 012.0700	TEXAS INST	1N4448 GEGURTET	
V830	AD 1N4448 75V 0A15 UDI DIODE	AD 012.0700	TEXAS INST	1N4448 GEGURTET	
V850	AD BAW56 2X70V 0A1 UDI DIODE	012.9350	VALVO	BAW56	

Für diese Unterlage behalten wir
s alle Rechte vor

Kennz. Comp.No.	Benennung Designation	Sachnummer Stock No.	Hersteller Manufacturer	Bezeichnung Designation	enthalten in contained in
V900	AK BCX70H N 45V 200MA TRANSISTOR	AK 007.3105	VALVO	BCX70H	
V901	AK BCX70H N 45V 200MA TRANSISTOR	AK 007.3105	VALVO	BCX70H	
V902	AL BD139 N 80V 1A0 TRANSISTOR	AL 274.8994	VALVO	BD139	
V910	AE BZV55/C6V8 0,5W ZDI ZENER DIODE	AE 006.9868	VALVO	BZV55/C6V8	
V911	AD 1N4448 75V 0A15 UDI DIODE	AD 012.0700	TEXAS INST	1N4448 GEGURTET	
V920	AE BZV55/C6V8 0,5W ZDI ZENER DIODE	AE 006.9868	VALVO	BZV55/C6V8	
V930	AE BZV55/C6V8 0,5W ZDI ZENER DIODE	AE 006.9868	VALVO	BZV55/C6V8	
V931	AD 1N4448 75V 0A15 UDI DIODE	AD 012.0700	TEXAS INST	1N4448 GEGURTET	
V940	AE BZX55/B12 0,5W ZDI ZENER DIODE	AE 218.8940	VALVO	BZX55/B12	
V941	AD 1N4448 75V 0A15 UDI DIODE	AD 012.0700	TEXAS INST	1N4448 GEGURTET	
W1	DX HF-KABEL 50 OHM RF-CABLE	848.3665			848.3542
W2	DX HF-KABEL 50 OHM RF-CABLE	848.3671			848.3542
X1 ..6	FJ EINBAUWINKELST. SMC ANGLE CONNECTOR	FJ 249.9684	RADIALL	R 112 669	
X7	FJ EINBAUBUCHSE SYST.SMA HF CONNECTOR	FJ 467.7946	RADIALL	R125.403	
X8	FJ EINBAUBUCHSE SYST.SMA HF CONNECTOR	FJ 467.7946	RADIALL	R125.403	
X16	FP STIFTLEISTE 36P.R2,54 PIN CONNECTOR	FP 242.3600	BINDER	742-5-11-0178-00-36	
X17	FP STIFTLEISTE 36P.R2,54 PIN CONNECTOR	FP 242.3600	BINDER	742-5-11-0178-00-36	
X18	FP STIFTLEISTE 36P.R2,54 PIN CONNECTOR 1-POLIG	FP 242.3600	BINDER	742-5-11-0178-00-36	
X21	FP STECKERLEISTE 64POL. MALE MULTIPOINT CONNECTOR	FP 273.0490	PANDUIT	100-964-033/999	
X100 ..103	VL WIRE-WRAP PIN WIRE-WRAP PIN	VL 088.4507	BERG	NR. 75 403-001	
X105 ..108	VL WIRE-WRAP PIN WIRE-WRAP PIN	VL 088.4507	BERG	NR. 75 403-001	
X110 ..113	VL WIRE-WRAP PIN WIRE-WRAP PIN	VL 088.4507	BERG	NR. 75 403-001	
X115 ..118	VL WIRE-WRAP PIN WIRE-WRAP PIN	VL 088.4507	BERG	NR. 75 403-001	
X120 ..123	VL WIRE-WRAP PIN WIRE-WRAP PIN	VL 088.4507	BERG	NR. 75 403-001	
X500	FJ EINBAUSTECKER SYST.SMA CONNECTOR SMA	FJ 806.7704	SUHNER	13SMA-50-0-1	
X600	FJ EINBAUSTECKER SYST.SMA CONNECTOR SMA	FJ 806.7704	SUHNER	13SMA-50-0-1	
X19A	FP STIFTLEISTE 36P.R2,54 PIN CONNECTOR	FP 242.3600	BINDER	742-5-11-0178-00-36	
X20A	FP STIFTLEISTE 36P.R2,54 PIN CONNECTOR 2-POLIG	FP 242.3600	BINDER	742-5-11-0178-00-36	
X25A	FP STIFTLEISTE 36P.R2,54 PIN CONNECTOR 2-POLIG	FP 242.3600	BINDER	742-5-11-0178-00-36	
X25B	FP STIFTLEISTE 36P.R2,54 PIN CONNECTOR 2-POLIG	FP 242.3600	BINDER	742-5-11-0178-00-36	
X26A	FP STIFTLEISTE 36P.R2,54 PIN CONNECTOR 2-POLIG	FP 242.3600	BINDER	742-5-11-0178-00-36	
X26B	FP STIFTLEISTE 36P.R2,54 PIN CONNECTOR 2-POLIG	FP 242.3600	BINDER	742-5-11-0178-00-36	
X30A	FP STIFTLEISTE 36P.R2,54 PIN CONNECTOR 2-POLIG	FP 242.3600	BINDER	742-5-11-0178-00-36	
X30B	FP STIFTLEISTE 36P.R2,54 PIN CONNECTOR	FP 242.3600	BINDER	742-5-11-0178-00-36	

Kennz. Comp.No.	Benennung Designation	Sachnummer Stock No.	Hersteller Manufacturer	Bezeichnung Designation	enthalten in contained in
X31A	2-POLIG FP STIFTLEISTE 36P.R2,54 PIN CONNECTOR 2-POLIG	FP 242.3600	BINDER	742-5-11-0178-00-36	
X32A	2-POLIG FP STIFTLEISTE 36P.R2,54 PIN CONNECTOR 2-POLIG	FP 242.3600	BINDER	742-5-11-0178-00-36	
X32B	2-POLIG FP STIFTLEISTE 36P.R2,54 PIN CONNECTOR 2-POLIG	FP 242.3600	BINDER	742-5-11-0178-00-36	
X33A	2-POLIG FP STIFTLEISTE 36P.R2,54 PIN CONNECTOR 2-POLIG	FP 242.3600	BINDER	742-5-11-0178-00-36	
X33B	2-POLIG FP STIFTLEISTE 36P.R2,54 PIN CONNECTOR 2-POLIG	FP 242.3600	BINDER	742-5-11-0178-00-36	
X40A	2-POLIG FP STIFTLEISTE 36P.R2,54 PIN CONNECTOR 2-POLIG	FP 242.3600	BINDER	742-5-11-0178-00-36	
X80A	2-POLIG FP STIFTLEISTE 36P.R2,54 PIN CONNECTOR 2-POLIG	FP 242.3600	BINDER	742-5-11-0178-00-36	
X81A	2-POLIG FP STIFTLEISTE 36P.R2,54 PIN CONNECTOR 2-POLIG	FP 242.3600	BINDER	742-5-11-0178-00-36	
X82A	2-POLIG FP STIFTLEISTE 36P.R2,54 PIN CONNECTOR 2-POLIG	FP 242.3600	BINDER	742-5-11-0178-00-36	
X83A	2-POLIG FP STIFTLEISTE 36P.R2,54 PIN CONNECTOR 2-POLIG	FP 242.3600	BINDER	742-5-11-0178-00-36	
X84A	2-POLIG FP STIFTLEISTE 36P.R2,54 PIN CONNECTOR 2-POLIG	FP 242.3600	BINDER	742-5-11-0178-00-36	
X85A	2-POLIG FP STIFTLEISTE 36P.R2,54 PIN CONNECTOR 2-POLIG	FP 242.3600	BINDER	742-5-11-0178-00-36	
X86A	2-POLIG FP STIFTLEISTE 36P.R2,54 PIN CONNECTOR 2-POLIG	FP 242.3600	BINDER	742-5-11-0178-00-36	
X87A	2-POLIG FP STIFTLEISTE 36P.R2,54 PIN CONNECTOR 2-POLIG	FP 242.3600	BINDER	742-5-11-0178-00-36	
X88A	2-POLIG FP STIFTLEISTE 36P.R2,54 PIN CONNECTOR 2-POLIG	FP 242.3600	BINDER	742-5-11-0178-00-36	
X88B	2-POLIG FP STIFTLEISTE 36P.R2,54 PIN CONNECTOR 2-POLIG	FP 242.3600	BINDER	742-5-11-0178-00-36	
X89A	2-POLIG FP STIFTLEISTE 36P.R2,54 PIN CONNECTOR 2-POLIG	FP 242.3600	BINDER	742-5-11-0178-00-36	
X89B	2-POLIG FP STIFTLEISTE 36P.R2,54 PIN CONNECTOR 2-POLIG	FP 242.3600	BINDER	742-5-11-0178-00-36	
					- ENDE -

Für diese Unterlage behalten wir uns alle Rechte vor

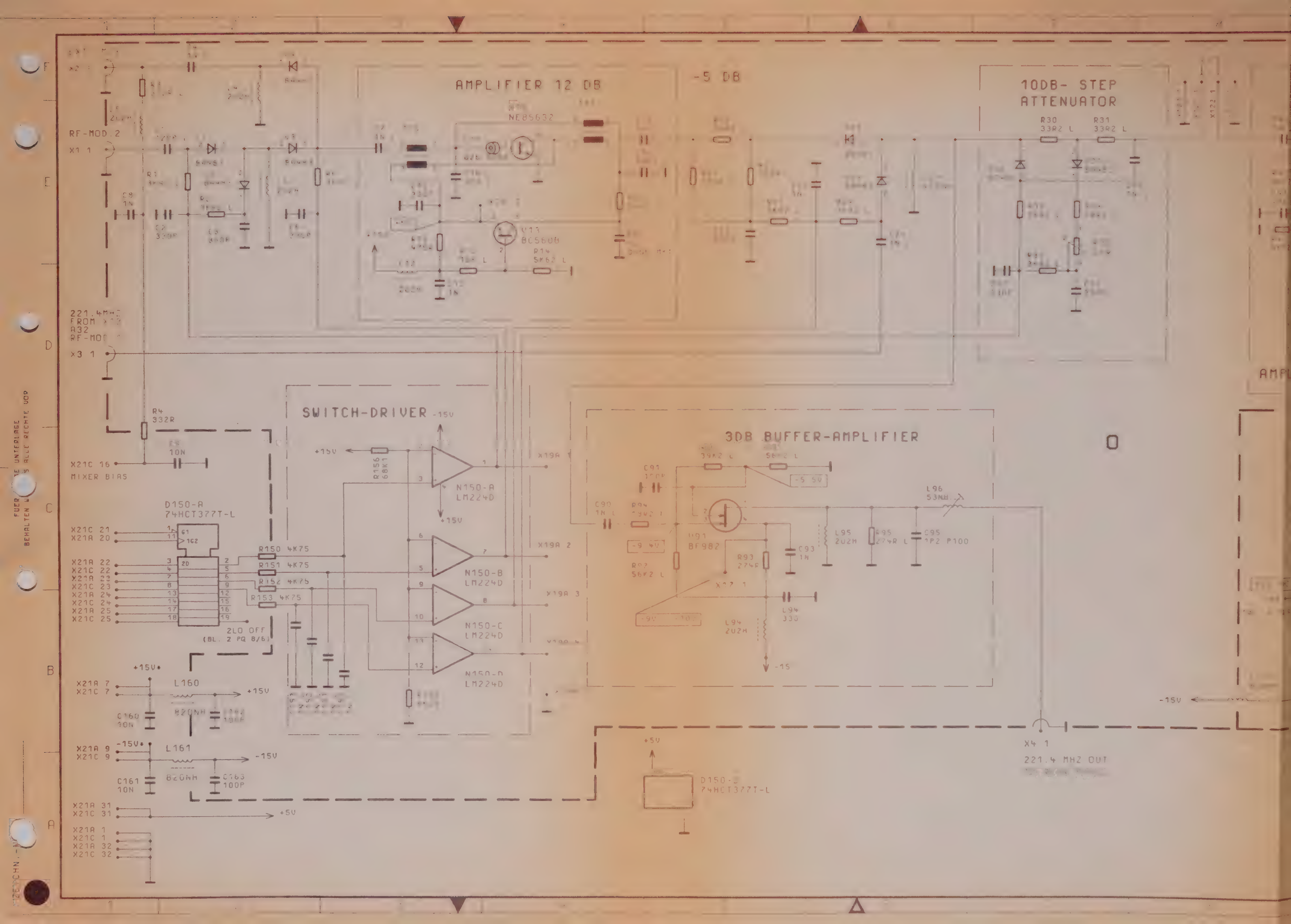
AMPLIFIER 12 DB
-5 DB
10DB- STEP ATTENUATOR
NE85632
V13 BC560B
R14 5K62 L
R30 33R2 L
R31 33R2 L
RF-MOD.2
X1 1
221.4MHZ FROM X13 A32 RF-MOD
X3 1
R4 332R
X21C 16 MIXER BIAS
SWITCH-DRIVER
-15V
+15V
R156 68K1
N150-A LM224D
N150-B LM224D
N150-C LM224D
N150-D LM224D
X19A 1
X19A 2
X19A 3
D150-A 74HCT377T-L
X21C 21
X21A 20
X21A 22
X21C 22
X21A 23
X21C 23
X21A 24
X21C 24
X21A 25
X21C 25
R150 4K75
R151 4K75
R152 4K75
R153 4K75
2LO OFF (BL. 2 PQ 8/6)
3DB BUFFER-AMPLIFIER
39K2 L
56K2 L
-5.5V
C91 100P
C90 1N L
R94 19K2 L
-9.4V
R92 56K2 L
U91 BF982
R93 274R
C93 1N
L95 2U2H
R95 274R L
C95 1P2 P100
L96 53NH
X17 1
L94 330
L94 2U2H
-15
+15V*
X21A 7
X21C 7
L160
820NH
C160 10N
C162 100P
-15V*
X21A 9
X21C 9
L161
820NH
C161 10N
C163 100P
X21A 31
X21C 31
+5V
X21A 1
X21C 1
X21A 32
X21C 32
D150-B 74HCT377T-L
X4 1
221.4 MHZ OUT
AMPL

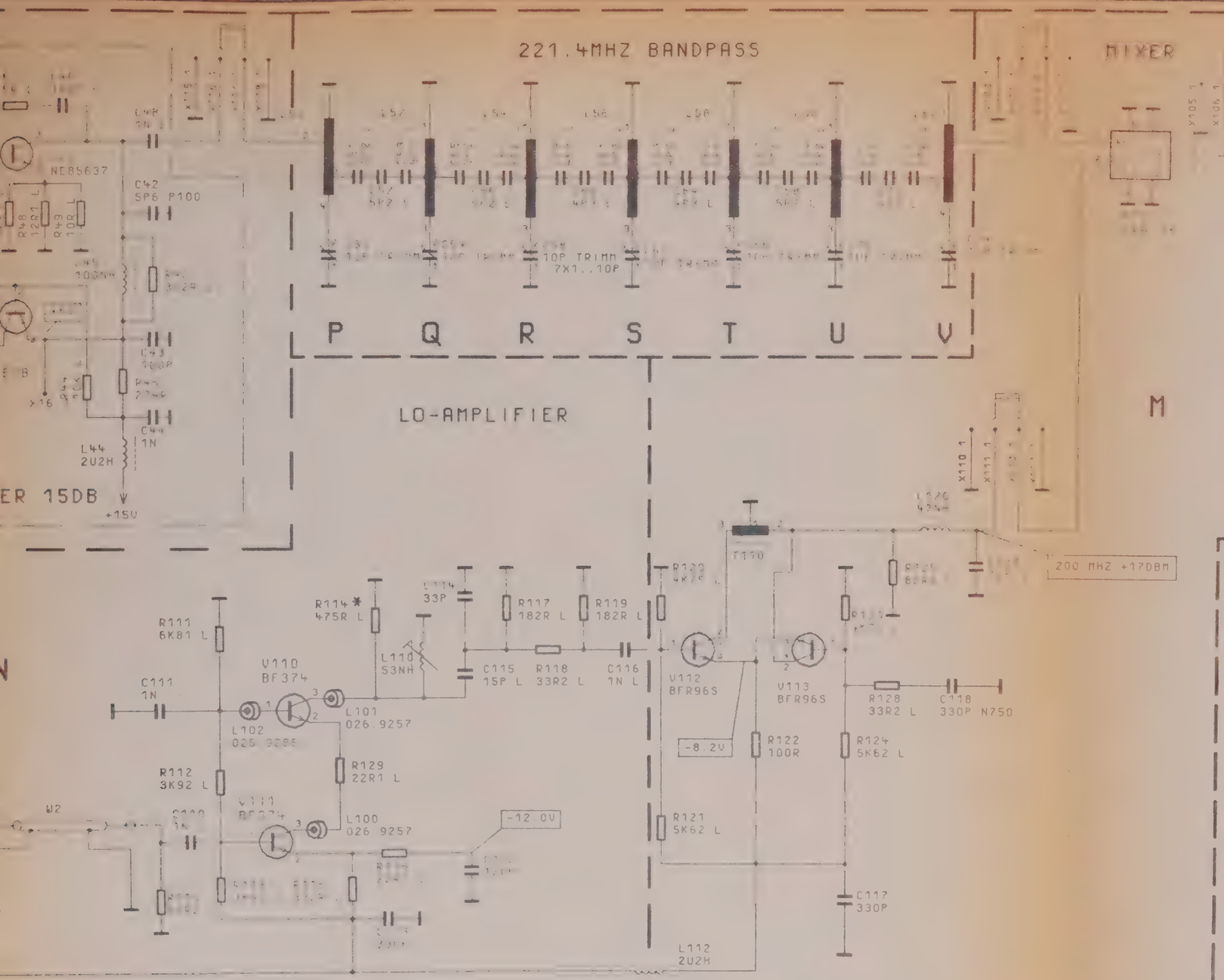

ACHTUNG: EGB!
ELEKTROSTATISCH GEFAEHRDETE BAUELEMENTE ERFORDERN EINE BESONDERE HANDHABUNG.

ATTENTION: ESD!
ELECTROSTATIC SENSITIVE DEVICES REQUIRE SPECIAL HANDLING.

STROMLAUF GILT FUER VAR.02
CIRCUIT DIAGRAM IS VALID FOR MOD.02

* NICHT BESTUECKT
NOT FITTED

AENDERUNGS-MITTEILUNG	ROHDE&SCHWARZ	BENENNUNG: 2ND LO/3RD CONVERTER
		848.3507.01S

FUER DIESE UNTERLAGE
BEHALTEN WIR UNS ALLE RECHTE VOR

DRIVER 2

POWER DR

X30

X32

X26

X26B 2
X26B 1
X26A 1
X26A 2

C210 100P L
L210 2U2H
C211 10N L
R210 51R1 L

V210 5082-2800
V211 5082 2800

T202

FREQUENCY DOUBLER

G H

X25B 2
X25B 1
X25A 1
X25A 2
X25

BP 400

X20

X20A 1
X20A 2

C203 220P L
5V
L203 2U2H
R206 61R9
C204 10N L
C207 100U 16V
N200 MSA0486

R207 121R

1.75V
C202 220P L

DRIVER 1

R205 274R L
R204 100R L
R203 100R STEH.
R202 274R L

F

L200 100NH
L201 100NH

C205 5P6 L
(BL. 1 PQ B/8)
CAB

C201 220P L
R200 200R L
R201 47R5-MINI
C200 10P N750
C206 2P7 L
T200
T.U
200MHZ +8.. +12DBM
X6 1

+15V***
+15V****
14.0V
1.75V
5.0V
1.3V
+15V**
+15V*
-15V**
-15V*
25V

X31

X31A 2
X31A 1
X31B 1
X31B 2

N300 MSA0386

C301 100P
R303 1K0R L
C310 100P L
C311 5P6 L
L309 47NH
L310 47NH

C312 2N2 L
R310 511R
V310 BFR96S
R311 16R2
L313 1UH
C316 1N L
C319 1N L
R313 2K74
C318 2U2 20V TA

L

C316 10R
C317 10N L
C318 10N L
C319 10N L
C320 10N L
C321 10N L
C322 10N L
C323 10N L
C324 10N L
C325 10N L
C326 10N L
C327 10N L
C328 10N L
C329 10N L
C330 10N L
C331 10N L
C332 10N L
C333 10N L
C334 10N L
C335 10N L
C336 10N L
C337 10N L
C338 10N L
C339 10N L
C340 10N L
C341 10N L
C342 10N L
C343 10N L
C344 10N L
C345 10N L
C346 10N L
C347 10N L
C348 10N L
C349 10N L
C350 10N L
C351 10N L
C352 10N L
C353 10N L
C354 10N L
C355 10N L
C356 10N L
C357 10N L
C358 10N L
C359 10N L
C360 10N L
C361 10N L
C362 10N L
C363 10N L
C364 10N L
C365 10N L
C366 10N L
C367 10N L
C368 10N L
C369 10N L
C370 10N L
C371 10N L
C372 10N L
C373 10N L
C374 10N L
C375 10N L
C376 10N L
C377 10N L
C378 10N L
C379 10N L
C380 10N L
C381 10N L
C382 10N L
C383 10N L
C384 10N L
C385 10N L
C386 10N L
C387 10N L
C388 10N L
C389 10N L
C390 10N L
C391 10N L
C392 10N L
C393 10N L
C394 10N L
C395 10N L
C396 10N L
C397 10N L
C398 10N L
C399 10N L
C400 10N L
C401 10N L
C402 10N L
C403 10N L
C404 10N L
C405 15U 20V TA
C406 10N L
C407 10N L
C408 10N L

L400 820NH
L401 820NH

V401 BC337-40
V402 1N4448
R461 1K
X40A 1
X40A 2
2LO OFF
(BL.1 PQ B/2)

* N
NI

ACHTUNG: EGB!
ELEKTROSTATISCH GEFAEHRDETE BAUELEMENTE ERFORDERN EINE BESONDERE HANDHABUNG

ATTENTION: ESD!
ELECTROSTATIC SENSITIVE DEVICES REQUIRE A SPECIAL HANDLING.

ZEICHN.-NR

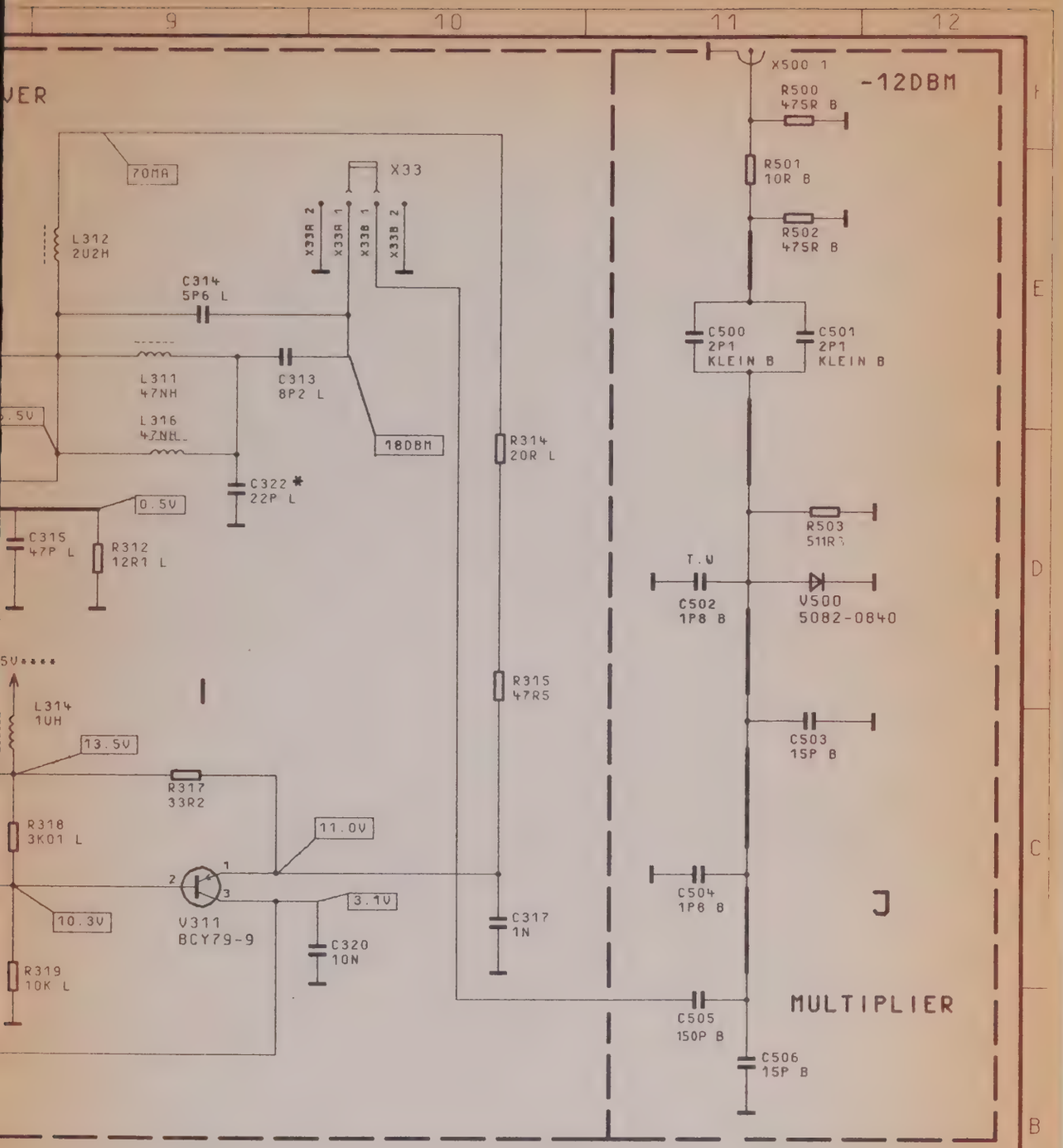

HT BESTUECKT
FITTED

STROMLAUF GILT FUER VAR.02
CIRCUIT DIAGRAM IS VALID FOR MOD.02

A	37074	20.12.88	PA	1KEF	TAG	NAME	BENENNUNG
B	37074	13 02 89	PA	BEARB.		PA	2ND LO/3RD CONVERTER
C	37086	07.89	Pa	GEPR.		HS	
D	37086	10 89	Pa	NORM			
				PLOTT	28. 2.89	*	

ÄND. NR.	ÄNDERUNGS-MITTEILUNG	DATUM	NAME

ROHDE&SCHWARZ

ZU GERAET FSB

ZEICHN.-NR. 848.3507.01S

BLATT-NR. 2

V 4 BL

REG I V 848.0550

ERSTE Z.

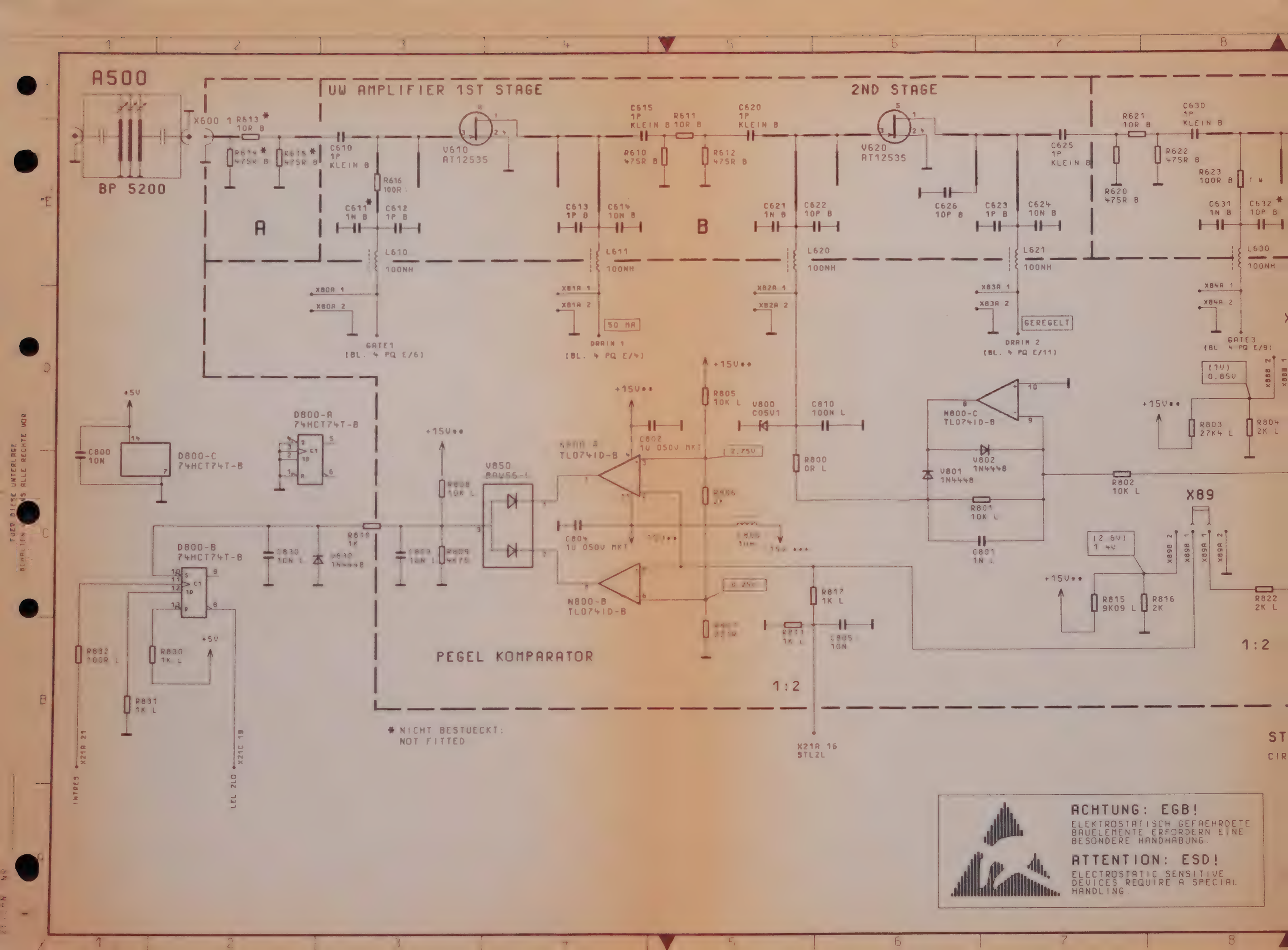
A500
BP 5200
UW AMPLIFIER 1ST STAGE
2ND STAGE
A
B
X600 1
R613 * 10R B
R614 * 475R B
R615 * 475R B
C610 1P KLEIN B
R616 100R
C611 * 1N B
C612 1P B
V610 AT12535
C615 1P KLEIN B
R611 10R B
R610 475R B
R612 475R B
C620 1P KLEIN B
V620 AT12535
C613 1P B
C614 10N B
C621 1N B
C622 10P B
C626 10P B
C623 1P B
C624 10N B
C625 1P KLEIN B
R621 10R B
R620 475R B
R622 475R B
C630 1P KLEIN B
R623 100R B
C631 1N B
C632 * 10P B
L610 100NH
L611 100NH
L620 100NH
L621 100NH
L630 100NH
X80A 1
X80A 2
X81A 1
X81A 2
X82A 1
X82A 2
X83A 1
X83A 2
X84A 1
X84A 2
GATE1 (BL. 4 PQ E/6)
50 MA
DRAIN 1 (BL. 4 PQ E/4)
GEREGELT
DRAIN 2 (BL. 4 PQ E/11)
GATE3 (BL. 4 PQ E/9)
+5V
C800 10N
D800-C 74HCT74T-B
D800-A 74HCT74T-B
D800-B 74HCT74T-B
+15V**
R805 10K L
V800 C05V1
C810 100N L
R800 0R L
C802 1U 050V MKT
2.75V
N800-A TL074ID-B
N800-B TL074ID-B
V850 BAV56-L
R808 10K L
R809 4K75
C804 1U 050V MKT
R810 1K
C830 10N L
D830 1N4448
C803 10N L
R832 100R L
R830 1K L
R831 1K L
R817 1K L
R811 1K L
C805 10N
PEGEL KOMPARATOR
1:2
N800-C TL074ID-B
V801 1N4448
V802 1N4448
R801 10K L
C801 1N L
R802 10K L
X89
(1V) 0.85V
R803 27K4 L
R804 2K L
(2.6V) 1.4V
R815 9K09 L
R816 2K
R822 2K L
X89B 2
X89B 1
X89A 1
X89A 2
X21A 16 STL2L
X21A 21 INTRES
X21C 19 LEL 2LO
* NICHT BESTUECKT: NOT FITTED
ACHTUNG: EGB!
ELEKTROSTATISCH GEFAEHRDETE BAUELEMENTE ERFORDERN EINE BESONDERE HANDHABUNG.
ATTENTION: ESD!
ELECTROSTATIC SENSITIVE DEVICES REQUIRE A SPECIAL HANDLING.

9 10 11 12

3RD STAGE

V630
A112535

C633
1P B

C634
10N B

L631
100NH

X85A 1
X85A 2

50 MA

DRAIN 3
(BL. 4 PQ E/7)

X88A 2

C

D

K

C640
1P
KLEIN B

C641
10N B

R643
100R B

L640
100NH

C642
10N B

X86A 1
X86A 2

GATE4
(BL. 4 PQ E/11)

4TH STAGE

V640
FSX52WF

C643
1P B

X87A 1
X87A 2

L641
100NH

75 MA

DRAIN 4
(BL. 4 PQ E/9)

C644
10N B

C645
1P
KLEIN B

R640
475R B

R641
10R B

R642
475R B

N800-D
TL074ID-B

L700
820NH

R700
1K

R701
100R B

V700
5082-2835

R820
332K L

C807
33P L

R702
121R B

DETEKTOR

R818
100K

R821
20K .3W
SQX 08

R819
2K L

C806
2N2

R703
39R2 B

R705
100R B

R707
100R B

R704
121R B

-5DBM

X7 1

X8 1

17DBM

50Ω

MLAUF GILT FUER VAR.02
T DIAGRAM IS VALID FOR MOD.02

	37074	20 12 88	PA	1KEF	TAG	NAME	BENENNUNG
	37074	13 02 89	PA	BEARB		PA	2ND LO/3RD CONVERTER
	37086	07.89	Pa	GEPR		HS	
				NORM			
				PLOTT	28. 2.89	*	
							ZEICHN.-NR. 848.3507.01S
							BLATT-NR. 3 V. 4 BL
	ÄNDERUNGS-MITTEILUNG	DATUM	NAME	ROHDE&SCHWARZ			
				ZU GERÄT FSB			REG I V. 848.0550 ERSTE Z.

9 10 11 12

DIESE UNTERLAGE
BEHALTEN WIR UNS ALLE RECHTE VOR

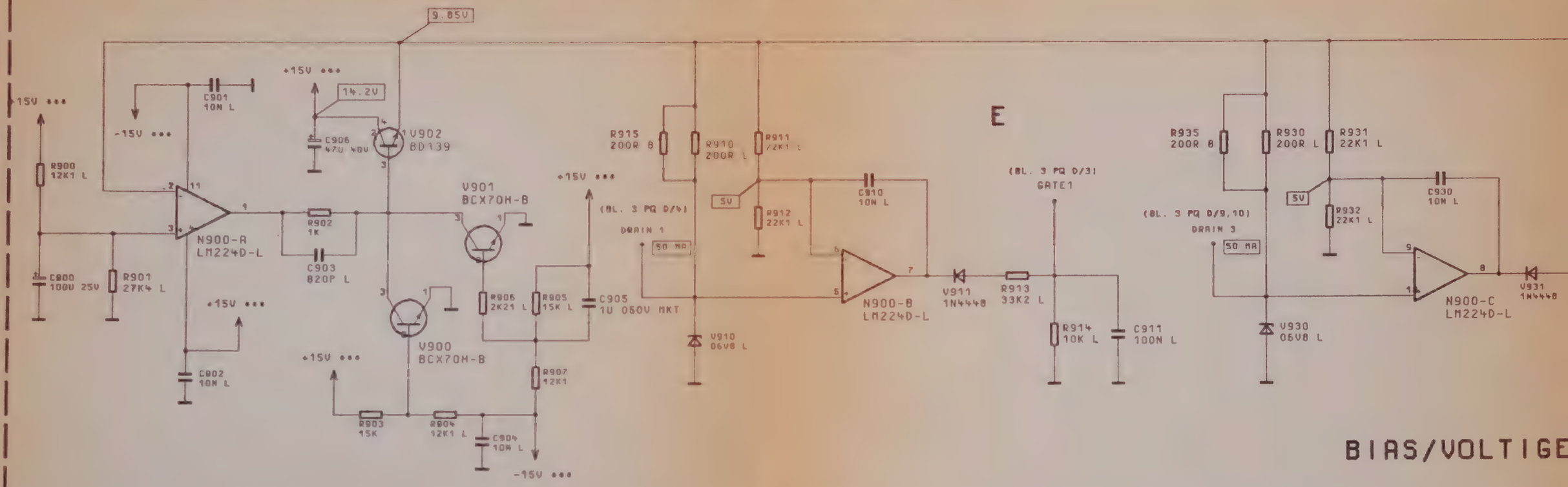

* NICHT BESTUECKT:
NOT FITTED

ZEICHN NR

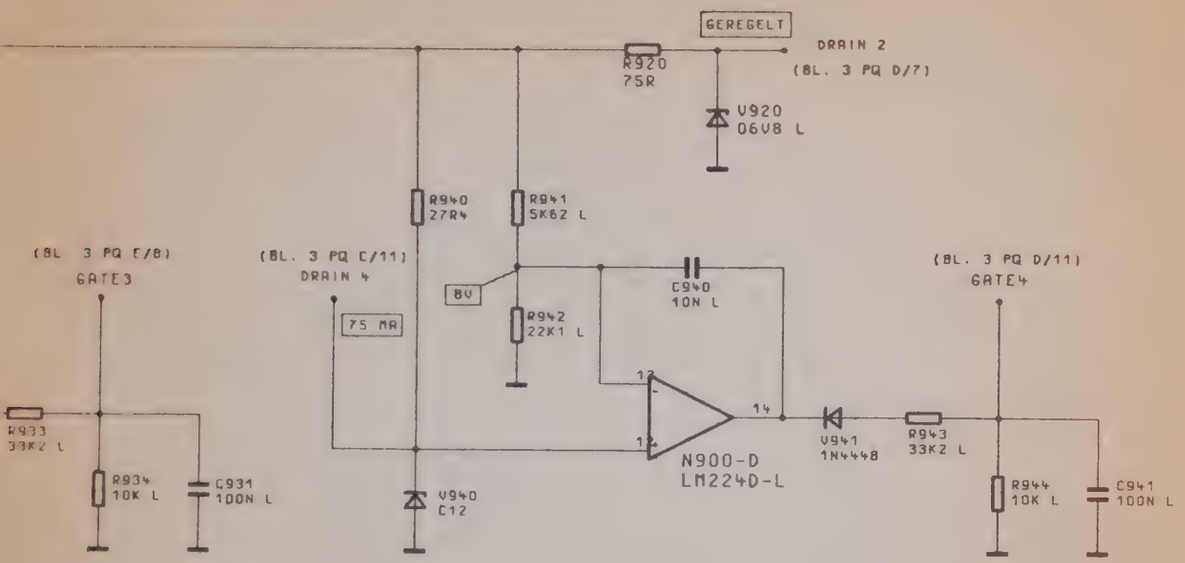

CONTROL

ACHTUNG: EGB!
ELEKTROSTATISCH GEFAEHRDETE BAUELEMENTE ERFORDERN EINE BESONDERE HANDHABUNG.

ATTENTION: ESD!
ELECTROSTATIC SENSITIVE DEVICES REQUIRE A SPECIAL HANDLING.

STROMLAUF GILT FUER VAR.02

CIRCUIT DIAGRAM IS VALID FOR MOD.02

A	37074	20 12 88	PA	1KEF	TAG	NAME	BENENNUNG
B	37074	13 02 89	PA	BEARB		PA	2ND LO/3RD CONVERTER
				GEPR		HS	
				NORM			
				PLOTT	28. 2.89	*	
ÄND. IND.	ÄNDERUNGS MITTEILUNG	DATUM	NAME	ROHDE&SCHWARZ			ZEICHN.-NR. 848.3507.01S
				ZU GERÄET FSB			REG.I.V. 848.0550 ERSTE Z.

BLATT-NR 4 v. 4 BL

Darstellung Loetseite

Bearbeitet nach HVN 000

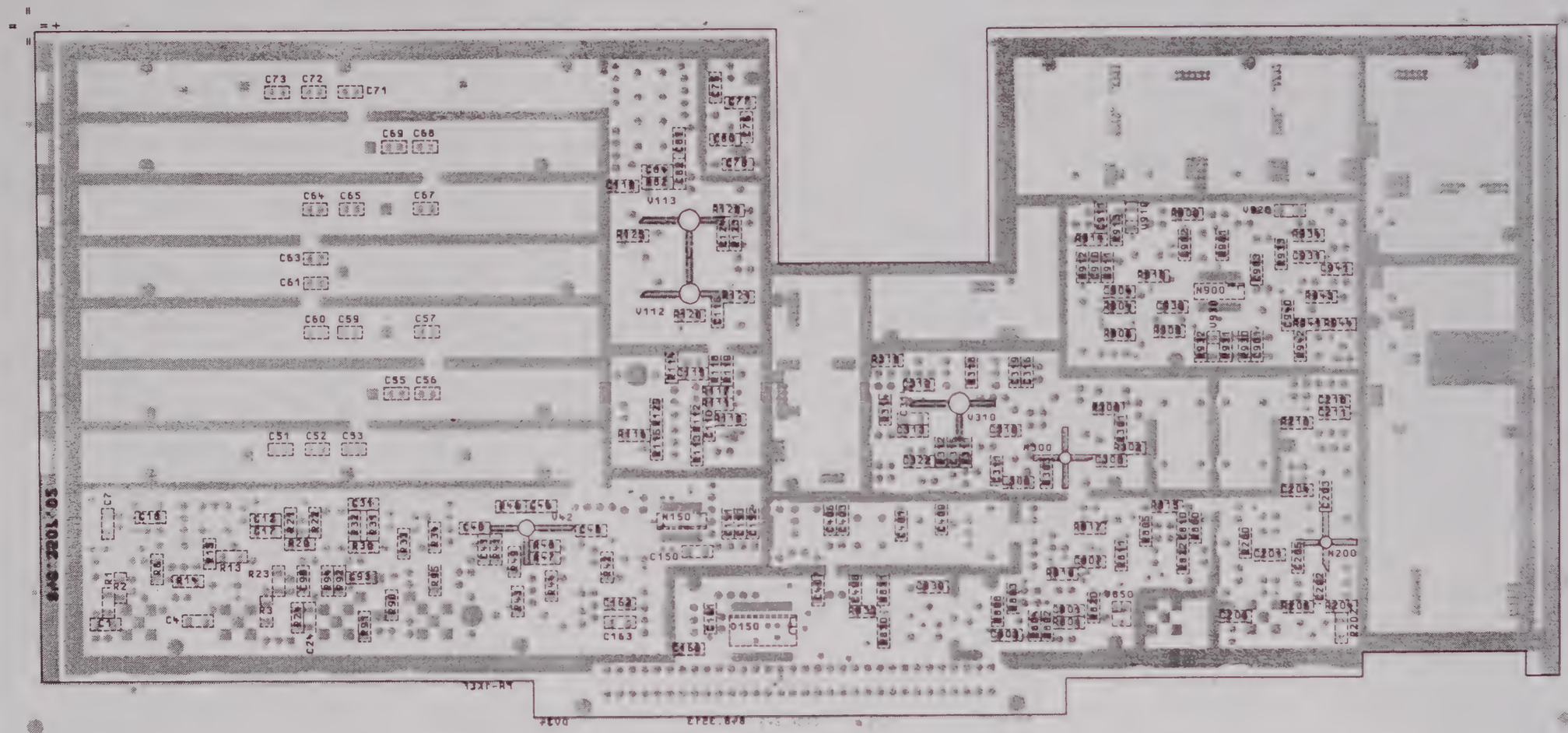

FUER DIESE ZEICHNUNG BEHALTEN WIR UNS ALLE RECHTE VOR
DIESE ZEICHNUNG IST EIGENTUM DER ROHDE&SCHWARZ, AEUSSERUNGEN KOENNEN NUR DURCH AENDERUNGSDUCK, AENDERUNGSMITTEILUNG ODER DURCH AENDERUNG DES DATENSATZES ERFOLGEN

ACHTUNG: EGB!
ELEKTROSTATISCH GEFAEHRDETE BAUELEMENTE ERFORDERN EINE BESONDERE HANDHABUNG.

EINBAU UND BETRIEB NACH HVC 250

Variantenerklaerung / VERSION
VAR02 - Grundausfuehrung / BASIC MODEL

AEND. IND.	AENDERUNGS-MITTEILUNG	DATUM	NAME
D	37074	12.88	PA
E	37074	02.89	PA

MASSE OHNE TOLERANZANGABE
-0.2 MM

	TAG	NAME
1KEF		PA
BEARB.		PA
GEPR.		HS
NORM		
PLOTT	22. 3.89	*

ROHDE&SCHWARZ
ZU GERAET FSB

MASSSTAB 1 : 1

WERKSTOFF

BENENNUNG
2ND LO/3RD CONVERTER
Z

ZEICHN.-NR. 848.3507.01 EE
BLATT-NR. 2 V. 4 BL.
REG.I.V. 848.0550 ERSTE Z.

Ansicht und Leitungsführung Bauteilseite
View of tracks on component side

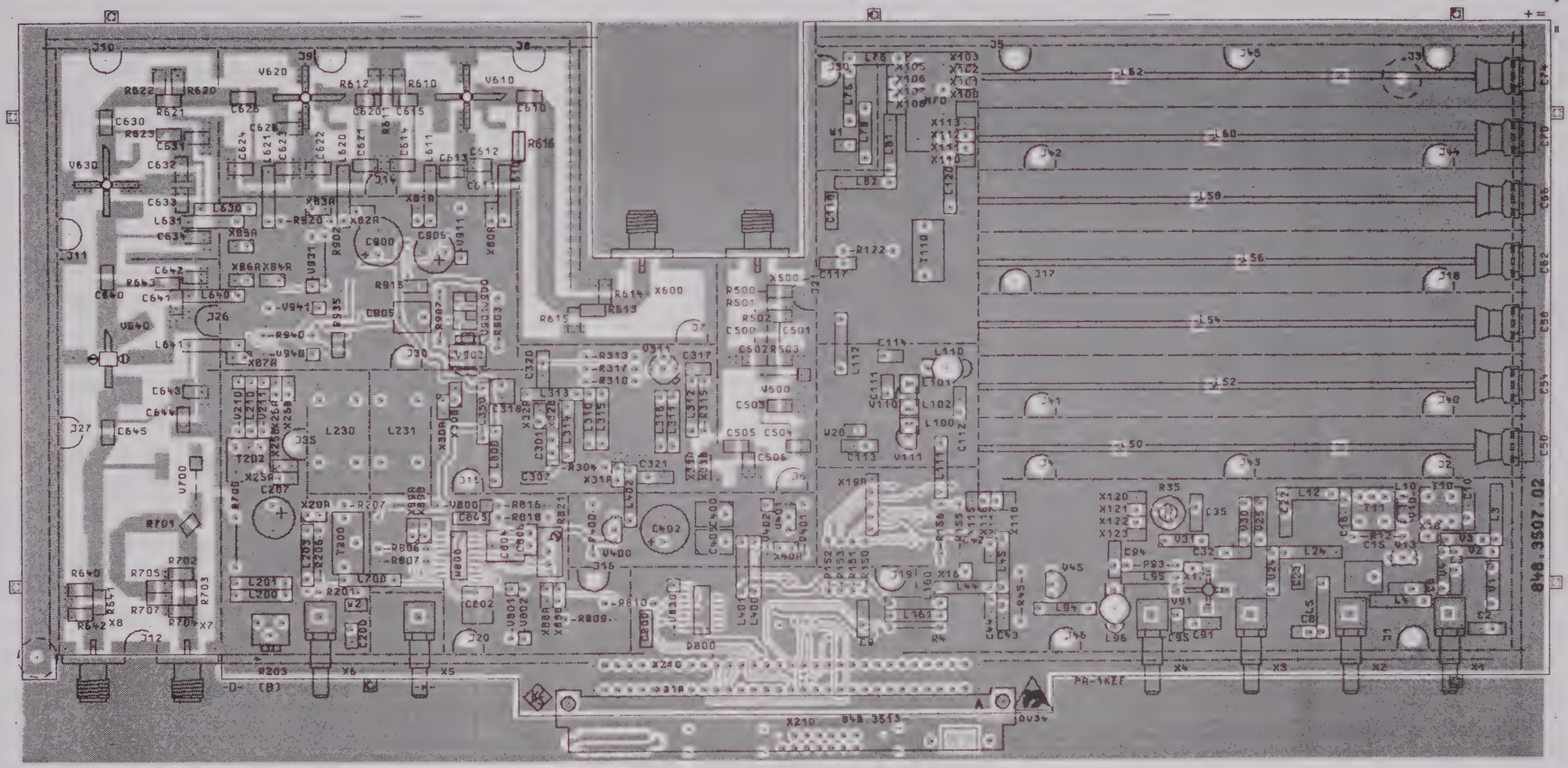

VARIANTENERKLÄRUNG/VERSION
VAR 02 – GRUNDAUSFÜHRUNG/BASIC MODEL

E	37074	02.89	PA	Maße ohne Toleranzangabe		Maßstab 1 : 1	
F	37086	07.89	PA			Halbzeug, Werkstoff	
				1KEF	Tag	Name	Benennung: 2ND LO/3RD CONVERTER — Z
				Bearb	02.89	PA	
				Gepr			
				Norm			
And. Zust.	Änderungs-Mitteilung	Tag	Name	ROHDE&SCHWARZ		Zeichn.-Nr 848.3507.01 EE	Blatt-Nr 3 v Bl
				zu Gerät FSB		reg. V 848.0550 V	erste Z

(hierzu HVC 250)

ACHTUNG EGB!
Elektrostatisch gefährdete Bauelemente erfordern eine besondere Handhabung.

ATTENTION ESD!
Electrostatic sensitive devices require a special handling.

Für diese Unterlage behalten wir uns alle Rechte vor

Projektion Methode E

ROHDE&SCHWARZ

SERVICE DOCUMENTATION

M Synthesizer

807.0010.02

Contents

		Page
6	**Service Instructions M Synthesizer**	6.1
6.1	**Function Description**	6.1
6.1.1	M Divider	6.1
6.1.2	Phase Detector	6.1
6.1.3	Integrator	6.2
6.1.4	Lock-in Indication	6.2
6.1.5	Parallel Interface	6.3
6.2	**Testing and Adjustment**	6.4
6.2.1	Testing the Voltage at V161	6.4
6.2.2	Adjusting the Oscillator	6.4
6.2.3	Testing the Amplifier Branches	6.4
6.2.4	Testing the Frequency Divider	6.4
6.2.5	Testing the Phase Detector	6.5
6.2.6	Adjusting the Loop Filter	6.5
6.2.7	Testing the PLL Gain Switchover	6.5
6.2.8	Testing the Phase Detector Switch-off, Testing the Error Message LEFMO	6.5
6.2.9	Testing the Selftest Voltage STFMO	6.5
6.2.10	Final Test	6.5
6.3	**Troubleshooting**	6.6

Parts lists
Circuit diagrams
Component location plans

6 Service Instructions M Synthesizer

(See circuit diagram 807.0010 S)

6.1 Function Description

The M synthesizer module contains an oscillator with a tuning range from 50 to 95 MHz which is synchronized to a reference frequency of 20 MHz in a PLL circuit using a programmable frequency divider. The synthesizer can be adjusted from 50 to 72.5 MHz in steps of 2.5 MHz and from 75 to 95 MHz in steps of 5 MHz.

The oscillator, with the field effect transistor V9 as the active element, is designed as a Hartley circuit and can be tuned using the antiparallel diode quartets V1 to V4 and V5 to V8. The tuning voltage is applied to L1. Limiting of the oscillator level can be set using R14 by changing the DC voltage at the cathode V11. A part of the oscillator power is coupled-out by the source follower V10 and applied to the power divider T1 via an attenuator R6, R7, R8. The amplifier stages V20 and V21 are used to decouple output X1 which drives the N synthesizer module. A bandpass filter is fitted between R28 and V21/3 which rejects frequencies below 50 MHz and above 95 MHz.

The oscillator signal is applied to the TTL converter V110 and the following frequency divider (M divider) via the buffer stages with V40 and V41 which are implemented just like V20 and V21 in 50-Ω technique.

6.1.1 M Divider

The M divider is designed as a fractional divider and is adjustable in 1/8 steps from M: 2.5 to 4.75 (only 1/4 steps are used from 3.75 to 4.75). The integral divider settings are made using the programmable frequency divider D110, via its programming inputs P0 and P1, the additional fraction (1/2, 1/4, 1/8) via inputs A1, A2, A3 of the four-bit binary adder D112. (See Table 6-1 for the setting code for the M divider factor or M synthesizer frequency.) The frequency divider output signal (X112) is delayed by one VCO period each time the adder overflows. It is then possible to change the divider factor in 1/8 steps using the binary adder D112. (The LSB A0 is hard-wired to "0".) The divider output signal (TTL level; X114) is again synchronized by the D flip-flop D114A with the VCO signal present via switching stages V113 and V115 so that the frequency divider noise (partly ECL logic) is eliminated.

Example:
divider factor M = 3

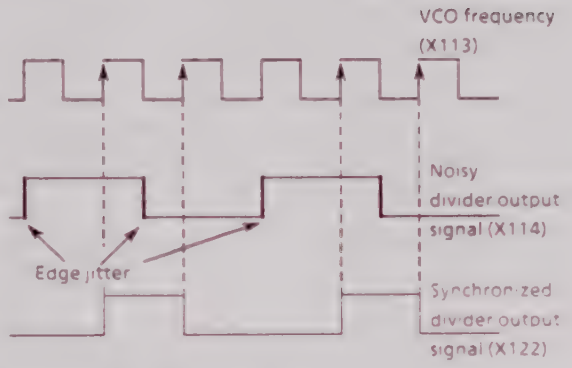

The phase noise of the synchronized divider output signal at X122 is thus reduced to the noise of the D flip-flop D114A plus the noise of the VCO freqeuncy reduced exactly by the factor M

6.1.2 Phase Detector

The divided VCO frequency is compared with the reference frequency of 20 MHz in the phase detector and a correction signal is generated. The phase detector consists of the frequency phase detector D80, D81B and also a phase detector implemented with the NAND gates D81C, D connected as an RS flip-flop.

The outputs of the two phase detectors are summed in the differential integrator N60.

To ensure that the phase detector with V80, V81 does not disturb the lock-in when switching over the frequency, it is switched off by the integrator for approx. 2 ms via V80, V81.

The reference frequency is applied to input X8 and is applied further to the TTL converter stage with V82 via 3-dB attenuator.

The differential element C85, R91, R92 generates pulses for the RS flip-flop D81C, D.

6.1.3 Integrator

The differential integrator N60 integrates the output pulses of the two phase detectors into a correction tuning voltage for the VCO.

The output voltage is limited to a minimum of approx. 2 V by V62 to V65 and a maximum of 20 V by the Zener diode V66.

The band-stop filters L63, C64, L62, C63 and L61, C62, L60, C61 attenuate the spurious of ±2.5 MHz or ± 5 MHz next to the carrier which are generated by the fractional divider.

V61 is used to increase the control gain - which varies because of the divider factor M which is adjustable from 2.5 to 4.75 - by parallel connection of R61 for factors M ≥3.75.

The control gain of the PLL can be adjusted optimally using R3.

The VCO noise can be measured at > approx. 20 kHz from the carrier for test purposes by shorting X18. (Reduction in control bandwidth.)

6.1.4 Lock-in Indication

The reference frequency of 20 MHz is divided by a factor of 4 by D140 A,B and is then applied simultaneously to the D input of D124A and the monoflop D143. D143/2 is High if reference frequency is applied, otherwise Low.

The divided VCO signal at X122 is divided by a total factor of 8 by D114B and D141A and B, and is then used as the clock signal for the D flip-flop D142A.

With the PLL locked, the clock frequency (pin 3/D142) is therefore always exactly half of the reference frequency/4 at the D input = 5 MHz and a constant High or Low signal is present at the Q output D142/5. If the PLL is not locked (or incorrectly locked), the Q output is pulsed with the beat frequency (2nd fVCO/8 - fref/4) which leads to negative pulses at monoflop D143/4 (or a continuous Low signal with a beat frequency >approx. 20 kHz).

The presence of the divided VCO frequency at the phase detector or the presence of the reference frequency is checked by the monoflops D143/B and D145/B which produce a Low signal at the Q outputs in the event of a fault.

The unlock indication H140 lights up if one of the three monoflop outputs D143/5, 4 or D145/5 becomes low. This unlock status is additionally stored by flip-flop D160/A and signalled as the fault signal LEFMO to the frequency processor.

The interrupt LEFMO can be deleted, i.e. set to High, by a positive pulse as long as a High signal is present at X143.

Negative pulses approx. 2 ms long are generated by monoflop D145B, derived from the positive edge of the signal LBSMO2 and cause the phase detector to be switched off briefly by D81C,D via the level converter N140A (see Section 6.1.2, Phase Detector).

N160 and V161 generate a low-noise voltage of +5.1 V for the ECL and TTL components from the +5 V* (approx. 5.5 V) supply.

The control data for the M synthesizer are latched in D162.

6.1.5 Parallel Interface

Data transfer to M synthesizer module

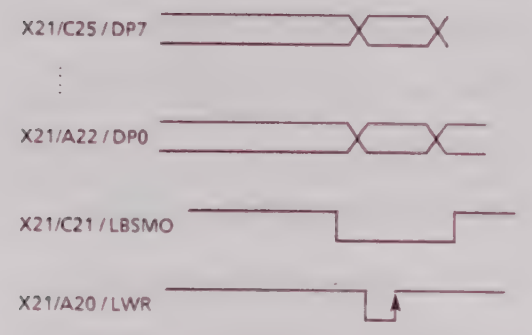

Note: the data are transferred with the rising edge of the LWR signal if LBSMO is Low at this time.

Table 6-1

Setting code of M synthesizer

Frequency	Divider factor	Data bits								Decimal equivalent
		DP 7	DP 6	DP 5	DP 4	DP 3	DP 2	DP 1	DP 0	
50	2.5	0	0	0	1	0	1	0	0	20
52.5	2.625	0	0	0	1	0	0	1	1	19
55	2.75	0	0	0	1	0	0	1	0	18
57.5	2.875	0	0	0	1	0	0	0	1	17
60	3.0	0	0	0	1	0	0	0	0	16
62.5	3.125	0	0	0	0	1	1	1	1	15
65	3.25	0	0	0	0	1	1	1	0	14
67.5	3.375	0	0	0	0	1	1	0	1	13
70	3.5	0	0	0	0	1	1	0	0	12
72.5	3.625	0	0	0	0	1	0	1	1	11
75	3.75	0	0	1	0	1	0	1	0	42
80	4	0	0	1	0	1	0	0	0	40
85	4.25	0	0	1	0	0	1	1	0	38
90	4.5	0	0	1	0	0	1	0	0	36
95	4.75	0	0	1	0	0	0	1	0	34

6.2 Testing and Adjustment

6.2.1 Testing the Voltage at V161

V161/3 (emitter): + 5.2 ± 0.1 V

6.2.2 Adjusting the Oscillator

Apply tuning voltage of 2.5 to 18 V to X60, connect analyzer to X17/2 (via adapter).

With a tuning voltage of 10 V, adjust the level at X17 to + 1.5 dBm using the potentiometer R14.

Adjust tuning voltage to 17.5 V:

Check that the oscillator frequency is 95 MHz ± 2 MHz (oscillator chamber covered at top and bottom).

Adjust tuning voltage to 2.5 V:

Nominal frequency: 50 MHz –3 MHz / + 2 MHz
Nominal level: + 3 dBm + 2 dBm / -3 dBm

Tune oscillator from 50 to 95 MHz, check spectral purity (spurious) and frequency response flatness:

Nominal level: + 3 dBm + 2 dBm / -3 dBm

6.2.3 Testing the Amplifier Branches

Connect jumper X16.

Output amplifier

Connect analyzer to X1.

Adjust oscillator from 50 to 95 MHz by changing the tuning voltage.

Nominal level at X1: + 3 dBm ± 3 dB

Frequency divider amplifier

Connect analyzer to X43 via adapter cable.

Nominal level at X43/2: + 5 dBm ± 3 dB

Connect jumper X42, check for TTL signal at V110/pin 1, V113/pin 1, V115/pin 1 using oscilloscope (10:1 divider) and with f = 95 MHz.

6.2.4 Testing the Frequency Divider

Connect frequency counter to X122 (10:1 divider).

Apply + 5 dBm to X42/3 from generator.

Change divider ratio of frequency divider and check frequency at X122. The ratio M is set by entering the following centre frequencies (span = 0 Hz):

M	Nominal frequency: ± 1 digit at		Centre frequency [MHz]
	f = 50 MHz	f = 100 MHz	
2.5	20 000	40 000	590
2.625	19.047	38.095	600
2.75	18.182	36.364	610
2.875	17.391	34.782	620
3	16.667	33.333	630
3.125	16.000	32.000	640
3.25	15 384	30.769	650
3.375	14.815	29.629	1260
3 5	14.286	28 571	1270
3.625	13.793	27 586	1280
3 75	13 333	26 667	1740
4	12.500	25 000	1750
4.25	11 765	23 529	1760
4.5	11 111	22 222	1770
4.75	10 526	21 052	1780

6.2.5 Testing the Phase Detector

Apply 60 MHz to X12/3 (20 MHz reference frequency at X8):

Check at X61:

Set divider ratio 3.125: + 25 V ± 3 V
Set divider ratio 2.875: −1 V ± 2 V

6.2.6 Adjusting the Loop Filter

Connect AF analyzer to X15 (1-M Ω input)

Enter as follows at X61 using tracking generator:
Frequency 0 to 10 MHz
Level 0 dBm
Set pole to 2.5 MHz using L63 and L62.
Set pole to 5 MHz using L61 and L60.

Nominal attenuation >60 dB in each case

6.2.7 Testing the PLL Gain Switchover

Divider factor	Voltage at X142	Centre frequency [MHz]
3 625	−7 V ± 2 V	1270
3 75	+ 22 V ± 2 V	1340

6.2.8 Testing the Phase Detector Switch-off, Testing the Error Message LEFMO

Connect storage oscilloscope probe to X141 and 2nd probe to D162/1 (signal LBSMO; trigger signal).

Adjust centre frequency (span = 0 Hz) between 10 MHz and 20 MHz.

Check:

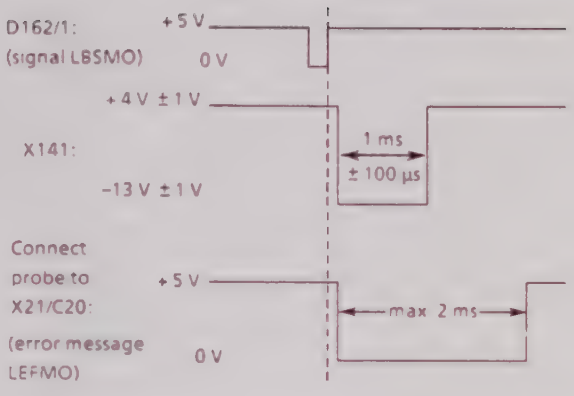

The LED H140 should light up briefly in each case

6.2.9 Testing the Selftest Voltage STFMO

Check at X21/A17: (V_{out} / 10 ± 2 %)

Set 50 MHz STFMO = 0.2 to 0.4 V
Set 95 MHz STFMO = 1 65 to 1.85 V

6.2.10 Final Test

Insert plug-in jumpers, screw on covers.

Connect analyzer to X1:

Check the output frequency, spurious and level at the following frequencies:

Centre frequency (span = 0 Hz) [MHz]	FM synthesizer [MHz]
190	50
200	52 5
210	55
1680	72 5
540	75
560	85
580	95

Spurious:
$f_{mod.}$ = ± 2.5 MHz >70 dB
$f_{mod.}$ = ± 5 MHz >70 dB
$f_{mod.}$ = 10 kHz to 2.5 MHz >80 dB

Level: + 3 dBm + 3 dB / −3 dB

6.3 Troubleshooting

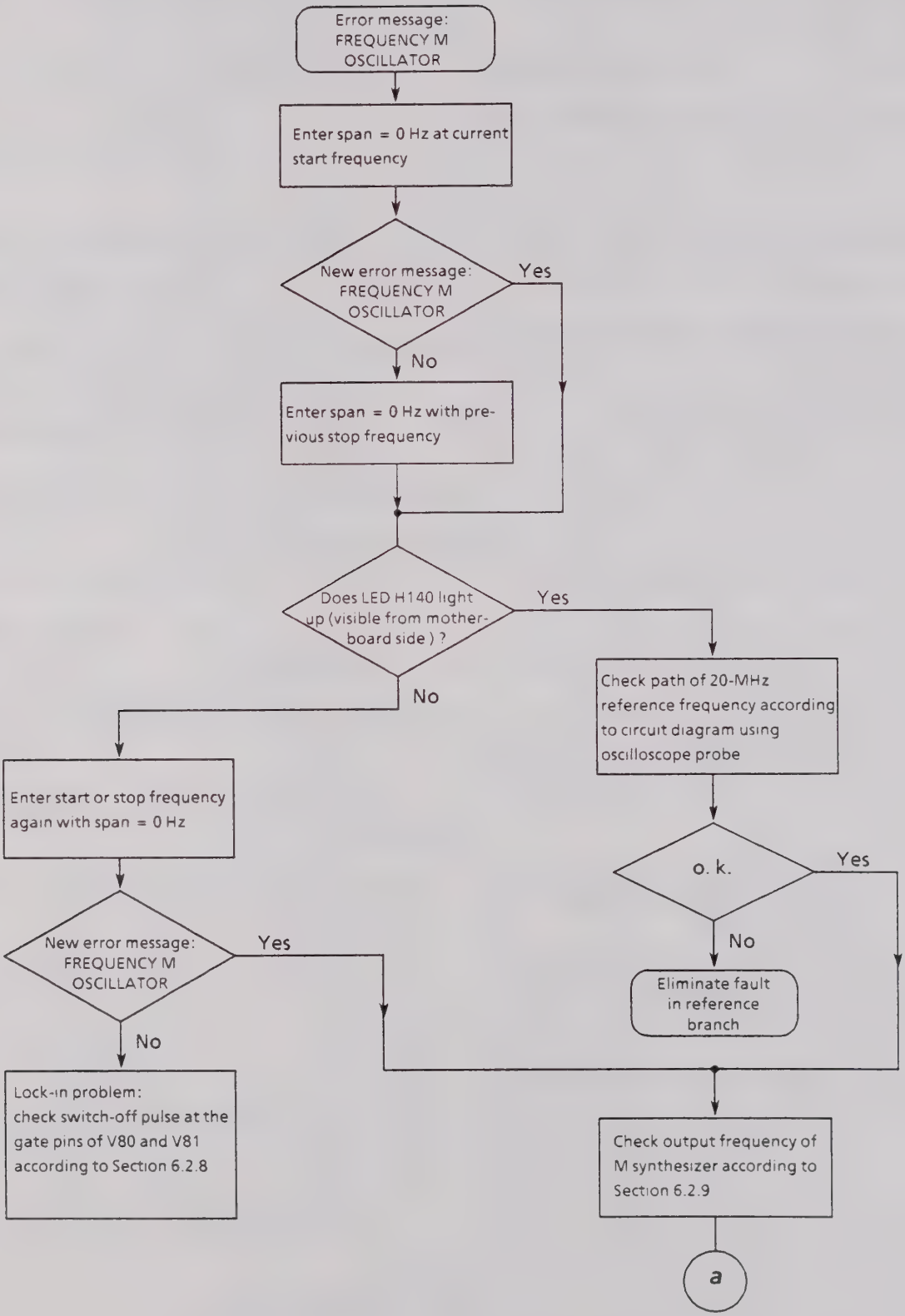

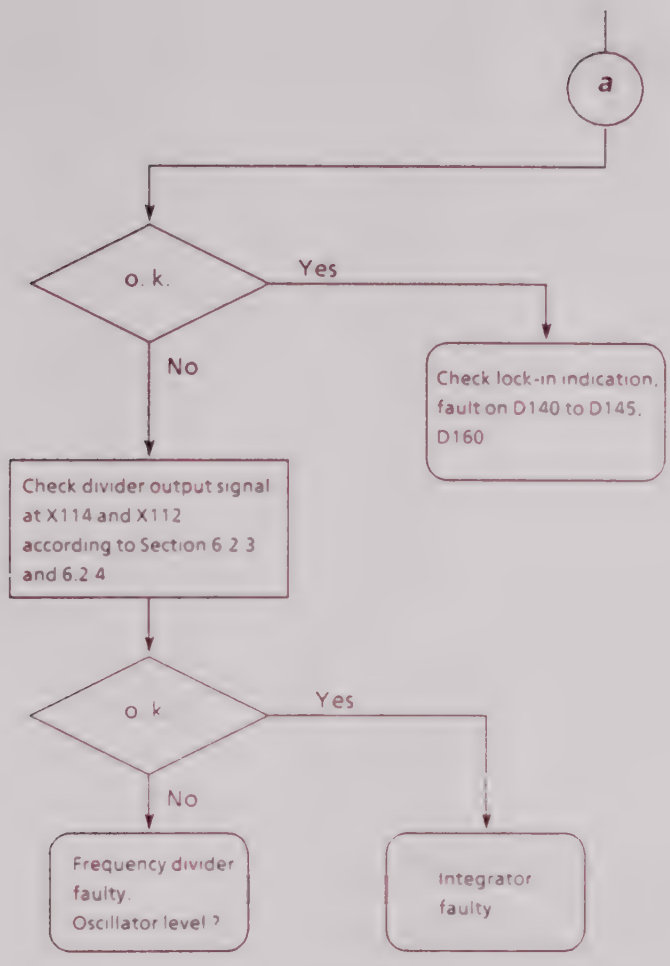
a
o. k.
Yes
No
Check lock-in indication, fault on D140 to D145, D160
Check divider output signal at X114 and X112 according to Section 6.2.3 and 6.2.4
o. k.
Yes
No
Frequency divider faulty. Oscillator level ?
Integrator faulty

ROHDE&SCHWARZ

Schaltteillisten
Stromläufe
Bestückungspläne

Part lists
Circuit diagrams
Components plans

Listes des pièces détachées
Schémas de Circuit
Plans des composants

(R 29500 Bl 2)
095.1000 Bl. 2

Kennz. Comp.No.	Benennung Designation	Sachnummer Stock No.	Hersteller Manufacturer	Bezeichnung Designation	enthalten in contained in
C1	CC 1NF+-10%63V K2000 CERAMIC CAPACITOR	CC 022.0784	VALVO	2222 63051 102	
C2	CK 1UF+-10%50V5RM MKT CAPACITOR	CK 099.2998	WIMA	MKS2/50/1UF/10%	
C3	CC 470PF+-10%3X4R2000 CAPACITOR	CC 087.6993	VALVO	2222 63051 471	
C4	CE 100UF-10+50% 25V 13X13 ELECTROLYTIC CAPACITOR	CE 208.4007	ROEDERST	ELKOEK100/25	
C5	CC 470PF+-10%3X4R2000 CAPACITOR	CC 087.6993	VALVO	2222 63051 471	
C6	CC 1NF+-10%63V K2000 CERAMIC CAPACITOR	CC 022.0784	VALVO	2222 63051 102	
C7	CC 22PF+-2%4X5NP0 CAPACITOR	CC 087.6464	VALVO	2222 678 10229	
C8	CE 2,2UF+-20%20V 5X 4X 7 ELECTROLYTIC CAPACITOR	CE 022.8104	ROEDERSTEI	ETR 1 2.2/20 20%	
C9	CC 10NF-20+50%7X8R4000 CAPACITOR	CC 087.7525	VALVO	2222 63051 64051103	
C10	CE 47UF-10+50% 40V 9X13 ELECTROLYTIC CAPACITOR	CE 006.7142	ROEDERST	EK 00 CB 247 G	
C20	CC 2,2NF+-10%5X6R2000 CAPACITOR	CC 087.7060	VALVO	2222 63051 222	
C21	CC 330PF+-10%3X4R2000 CAPACITOR	CC 087.6970	VALVO	2222 63051 331	
C22	CC 47PF+-2%5X6NP0 CAPACITOR	CC 087.6506	VALVO	2222 678 10479	
C23	CC 10NF-20+50%7X8R4000 CAPACITOR	CC 087.7525	VALVO	2222 63051 64051103	
C24	CC 2,2NF+-10%5X6R2000 CAPACITOR	CC 087.7060	VALVO	2222 63051 222	
C25	CC 56PF+-2%5X6NP0 CAPACITOR	CC 087.6512	VALVO	2222 678 10569	
C26	CC 33PF+-2%4X5NP0 CAPACITOR	CC 087.6487	VALVO	2222 678 10339	
C27	CC 68PF+-2%6X7NP0 CAPACITOR	CC 087.6529	VALVO	2222 678 10689	
C28	CC 22PF+-2%4X5NP0 CAPACITOR	CC 087.6464	VALVO	2222 678 10229	
C29	CC 47PF+-2%5X6NP0 CAPACITOR	CC 087.6506	VALVO	2222 678 10479	
C30	CC 12PF+-2%3X4NP0 CAPACITOR	CC 087.6435	VALVO	2222 678 10129	
C31	CC 33PF+-2%4X5NP0 CAPACITOR	CC 087.6487	VALVO	2222 678 10339	
C32	CC 330PF+-10%3X4R2000 CAPACITOR	CC 087.6970	VALVO	2222 63051 331	
C33	CC 10NF-20+50%7X8R4000 CAPACITOR	CC 087.7525	VALVO	2222 63051 64051103	
C34	CC 2,2NF+-10%5X6R2000 CAPACITOR	CC 087.7060	VALVO	2222 63051 222	
C35	CC 82PF+-2%6X7NP0 CAPACITOR	CC 087.6535	VALVO	2222 678 10829	
C40	CC 2,2NF+-10%5X6R2000 CAPACITOR	CC 087.7060	VALVO	2222 63051 222	
C41	CC 10NF-20+50%7X8R4000 CAPACITOR	CC 087.7525	VALVO	2222 63051 64051103	
C42	CC 330PF+-10%3X4R2000 CAPACITOR	CC 087.6970	VALVO	2222 63051 331	
C43	CC 47PF+-2%5X6NP0 CAPACITOR	CC 087.6506	VALVO	2222 678 10479	
C44	CC 2,2NF+-10%5X6R2000 CAPACITOR	CC 087.7060	VALVO	2222 63051 222	
C45	CC 82PF+-2%6X7NP0 CAPACITOR	CC 087.6535	VALVO	2222 678 10829	
C46	CC 330PF+-10%3X4R2000 CAPACITOR	CC 087.6970	VALVO	2222 63051 331	
C47	CC 10NF-20+50%7X8R4000 CAPACITOR	CC 087.7525	VALVO	2222 63051 64051103	
C48	CC 2,2NF+-10%5X6R2000 CAPACITOR	CC 087.7060	VALVO	2222 63051 222	
C49	CC 2,2NF+-10%5X6R2000 CAPACITOR	CC 087.7060	VALVO	2222 63051 222	
C60	CC 100PF+-2%4X5N750 CAPACITOR	CC 087.6906	VALVO	2222 678 58101	
C61	CK 1,0NF +-1% 100V RM5 KP POLYPROPYLENE CAPACITOR	CK 007.7598	ROE	KP1830-210/011-R	
C62	CK 300PF+-1%63V6,3QUX11KP CAPACITOR	CK 334.4330	SIEMENS	B33531-A5301-F	

Für diese Unterlage behalten wir uns ins alle Rechte vor

Kennz. Comp.No.	Benennung Designation	Sachnummer Stock No.	Hersteller Manufacturer	Bezeichnung Designation	enthalten in contained in
C63	CK 2,4NF+-1%63V,3QUX11KP CAPACITOR	CK 334.5637	SIEMENS	B33531-A5242-F	
C64	CK 680PF +-1% 100V RM5 KP POLYPROPYLENE CAPACITOR	CK 007.7581	ROE	KP1830-168/011-R	
C65	CC 10NF-20+50%7X8R4000 CAPACITOR	CC 087.7525	VALVO	2222 63051 64051103	
C66	CK 100NF+-5%63V5RM MKT CAPACITOR	CK 099.2930	WIMA	MKS/2/63/0,1UF/5%	
C67	CK 100NF+-5%63V5RM MKT CAPACITOR	CK 099.2930	WIMA	MKS/2/63/0,1UF/5%	
C68	CC 2,2PF+-0,25PF3X4NP0 CAPACITOR	CC 087.6341	VALVO	2222 678 09228	
C69	CK 100NF+-5%63V5RM MKT CAPACITOR	CK 099.2930	WIMA	MKS/2/63/0,1UF/5%	
C70	CK 100NF+-5%63V5RM MKT CAPACITOR	CK 099.2930	WIMA	MKS/2/63/0,1UF/5%	
C71	CC 10NF-20+50%7X8R4000 CAPACITOR	CC 087.7525	VALVO	2222 63051 64051103	
C72	CC 10NF-20+50%7X8R4000 CAPACITOR	CC 087.7525	VALVO	2222 63051 64051103	
C73	CC 10NF-20+50%7X8R4000 CAPACITOR	CC 087.7525	VALVO	2222 63051 64051103	
C80	CC 10NF-20+50%7X8R4000 CAPACITOR	CC 087.7525	VALVO	2222 63051 64051103	
C81	CC 10NF-20+50%7X8R4000 CAPACITOR	CC 087.7525	VALVO	2222 63051 64051103	
C82	CE 47UF-10+50% 40V 9X13 ELECTROLYTIC CAPACITOR	CE 006.7142	ROEDERST	EK 00 CB 247 G	
C85	CC 33PF+-2%4X5NP0 CAPACITOR	CC 087.6487	VALVO	2222 678 10339	
C86	CC 10NF-20+50%7X8R4000 CAPACITOR	CC 087.7525	VALVO	2222 63051 64051103	
C87	CC 10NF-20+50%7X8R4000 CAPACITOR	CC 087.7525	VALVO	2222 63051 64051103	
C88	CC 820PF+-10%4X5R2000 CAPACITOR	CC 087.7025	VALVO	2222 63051 821	
C89	CC 820PF+-10%4X5R2000 CAPACITOR	CC 087.7025	VALVO	2222 63051 821	
C91	CC 820PF+-10%4X5R2000 CAPACITOR	CC 087.7025	VALVO	2222 63051 821	
C92	CC 820PF+-10%4X5R2000 CAPACITOR	CC 087.7025	VALVO	2222 63051 821	
C110 ..115	CC 10NF-20+50%7X8R4000 CAPACITOR	CC 087.7525	VALVO	2222 63051 64051103	
C116	CC 2,2NF+-10%5X6R2000 CAPACITOR	CC 087.7060	VALVO	2222 63051 222	
C117	CC 10NF-20+50%7X8R4000 CAPACITOR	CC 087.7525	VALVO	2222 63051 64051103	
C118	CC 2,2NF+-10%5X6R2000 CAPACITOR	CC 087.7060	VALVO	2222 63051 222	
C119	CC 2,2NF+-10%5X6R2000 CAPACITOR	CC 087.7060	VALVO	2222 63051 222	
C120	CC 2,2NF+-10%5X6R2000 CAPACITOR	CC 087.7060	VALVO	2222 63051 222	
C121 ..124	CC 10NF-20+50%7X8R4000 CAPACITOR	CC 087.7525	VALVO	2222 63051 64051103	
C125	CC 10NF-20+50%7X8R4000 CAPACITOR	CC 087.7525	VALVO	2222 63051 64051103	
C140	CC 10NF-20+50%7X8R4000 CAPACITOR	CC 087.7525	VALVO	2222 63051 64051103	
C141 ..144	CC 10NF-20+50%7X8R4000 CAPACITOR	CC 087.7525	VALVO	2222 63051 64051103	
C145	CK 22NF+-5%63V5RM MKT CAPACITOR	CK 099.2881	WIMA	MKS2/63/0,022UF/5%	
C146	CC 220PF+-2%6X7N750 CAPACITOR	CC 087.6941	VALVO	2222 678 58221	
C147	CK 100NF+-5%63V5RM MKT CAPACITOR	CK 099.2930	WIMA	MKS/2/63/0,1UF/5%	
C148	CC 100PF+-2%4X5N750 CAPACITOR	CC 087.6906	VALVO	2222 678 58101	
C149	CK 100NF+-5%63V5RM MKT CAPACITOR	CK 099.2930	WIMA	MKS/2/63/0,1UF/5%	
C151	CC 10NF-20+50%7X8R4000 CAPACITOR	CC 087.7525	VALVO	2222 63051 64051103	
C152	CC 100PF+-2%4X5N750 CAPACITOR	CC 087.6906	VALVO	2222 678 58101	
C153	CC 100PF+-2%4X5N750 CAPACITOR	CC 087.6906	VALVO	2222 678 58101	

Kennz. Comp.No.	Benennung Designation	Sachnummer Stock No.	Hersteller Manufacturer	Bezeichnung Designation	enthalten in contained in
C154	CE 47UF-10+50% 40V 9X13 ELECTROLYTIC CAPACITOR	CE 006.7142	ROEDERST	EK 00 CB 247 G	
C160	CC 10NF-20+50%7X8R4000 CAPACITOR	CC 087.7525	VALVO	2222 63051 64051103	
C161	CC 10NF-20+50%7X8R4000 CAPACITOR	CC 087.7525	VALVO	2222 63051 64051103	
C162	CC 100PF+-2%4X5N750 CAPACITOR	CC 087.6906	VALVO	2222 678 58101	
C163	CC 10NF-20+50%7X8R4000 CAPACITOR	CC 087.7525	VALVO	2222 63051 64051103	
C164	CC 100PF+-2%4X5N750 CAPACITOR	CC 087.6906	VALVO	2222 678 58101	
C165	CC 10NF-20+50%7X8R4000 CAPACITOR	CC 087.7525	VALVO	2222 63051 64051103	
C166	CC 10NF-20+50%7X8R4000 CAPACITOR	CC 087.7525	VALVO	2222 63051 64051103	
C167	CE 47UF-10+50% 40V 9X13 ELECTROLYTIC CAPACITOR	CE 006.7142	ROEDERST	EK 00 CB 247 G	
C168	CC 10NF-20+50%7X8R4000 CAPACITOR	CC 087.7525	VALVO	2222 63051 64051103	
C169	CC 10NF-20+50%7X8R4000 CAPACITOR	CC 087.7525	VALVO	2222 63051 64051103	
C170 ..174	CC 10NF-20+50%7X8R4000 CAPACITOR	CC 087.7525	VALVO	2222 63051 64051103	
C175	CE 100UF-10+50% 25V 13X13 ELECTROLYTIC CAPACITOR	CE 208.4007	ROEDERST	ELKOEK100/25	
C176	CK 100NF+-5%63V5RM MKT CAPACITOR	CK 099.2930	WIMA	MKS,2/63/0.1UF/5%	
C177	CE 47UF-10+50% 40V 9X13 ELECTROLYTIC CAPACITOR	CE 006.7142	ROEDERST	EK 00 CB 247 G	
C178 ..181	CC 10NF-20+50%7X8R4000 CAPACITOR	CC 087.7525	VALVO	2222 63051 64051103	
C182	CE 47UF-10+50% 40V 9X13 ELECTROLYTIC CAPACITOR	CE 006.7142	ROEDERST	EK 00 CB 247 G	
C183 ..190	CC 10NF-20+50%7X8R4000 CAPACITOR	CC 087.7525	VALVO	2222 63051 64051103	
C191	CE 47UF-10+50% 40V 9X13 ELECTROLYTIC CAPACITOR	CE 006.7142	ROEDERST	EK 00 CB 247 G	
C192 ..205	CC 10NF-20+50%7X8R4000 CAPACITOR	CC 087.7525	VALVO	2222 63051 64051103	
C206	CC 220PF+-2%6X7N750 CAPACITOR	CC 087.6941	VALVO	2222 678 58221	
C207	CC 10NF-20+50%7X8R4000 CAPACITOR	CC 087.7525	VALVO	2222 63051 64051103	
C208	CC 10NF-20+50%7X8R4000 CAPACITOR	CC 087.7525	VALVO	2222 63051 64051103	
C209	CC 10NF-20+50%7X8R4000 CAPACITOR	CC 087.7525	VALVO	2222 63051 64051103	
D80	BL 74F112PC 2XJK-FLIPF. DUAL JK-FLIPFLOP	BL 344.6565	FAIRCHILD	74F112PC	
D81	BL SN74ASOON 4X2IN NAND QUAD NAND GATE	807.0090	TEXAS	SN74ASOON	
D110	BL F10016DC 4B. COUNTER COUNTER	BL 344.7049	FAIRCHILD	10016DC	
D111	BL MC10131L 2XD FLIPFL FLIP FLOP	BL 475.1166	MOTOROLA	MC10131L	
D112	BL 74F283PC 4BIT-BIN.ADD 4BIT BINARY FULL ADDER	BL 373.6482	FAIRCHILD	74F283PC	
D113	BL 74F175PC 4XD-FLIPF. QUAD D FLIP-FLOP	BL 344.7355	FAIRCHILD	74F175PC	
D114	BL 74F74PC 2XD-FLIPFLOP DUAL D-FLIPFLOP	BL 344.6694	FAIRCHILD	74F74PC	
D115	BL MC10102L 4X2INP.NORG NOR GATE	BL 350.0007	MOTOROLA	MC10102L	
D140	BL MM74HC74N 2XD-FLIPFL DUAL D FLIP-FLOP	BL 571.3171	NSC	MM74HC74N	
D141	BL MM74HC74N 2XD-FLIPFL DUAL D FLIP-FLOP	BL 571.3171	NSC	MM74HC74N	
D142	BL MM74HC74N 2XD-FLIPFL DUAL D FLIP-FLOP	BL 571.3171	NSC	MM74HC74N	
D143	BL TC74HC123P 2XMULTIVIB DUAL MONOST.MULTIVIBRATOR	379.7145	TOSHIBA	TC74HC123P	
D144	BL MM74HC10N 3X3IN.NAND TRIPLE 3-INPUT NAND GATE	BL 571.3294	MOTOROLA	MC74HC10N	
D145	BL TC74HC123P 2XMULTIVIB DUAL MONOST.MULTIVIBRATOR	379.7145	TOSHIBA	TC74HC123P	

Kennz. Comp.No.	Benennung Designation	Sachnummer Stock No.	Hersteller Manufacturer	Bezeichnung Designation	enthalten in contained in
D160	BL MM74HC74N 2XD-FLIPFL DUAL D FLIP-FLOP	BL 571.3171	NSC	MM74HC74N	
D161	BL MM74HCOON 4X2IN.NAND QUAD 2-INPUT NAND GATE	BL 571.3194	MOTOROLA	MC74HCOON	
D162	BL PC74HC377P 8XD-FF EN OCTAL D-FLIP-FLOP	BL 806.0045	VALVO	PC74HC377P	
H140	AF QLMP1379 LED RT RD3 LED	AF 257.4736	HEWLETT	QLMP1379	
L1	LD 3,3OUH10%0,85OHMO,285A CHOKE	LD 067.2928	DELEVAN	DROSSEL1025-32	
L2	LL SPULE 2	807.0110			
L3	LD 3,3OUH10%0,85OHMO,285A CHOKE	LD 067.2928	DELEVAN	DROSSEL1025-32	
L4	LD 10 UH 10% 3R3 144 MA CHOKE	LD 026.4184	DELEVAN	DROSSEL1025-44	
L20	LD 4,7OUH10%1,2OOHMO,239A CHOKE	LD 067.2940	DELEVAN	DROSSEL1025-36	
L21	LD 0,15UH10%0,1OOHM1,23OA CHOKE	LD 067.2763	DELEVAN	DROSSEL1025-00	
L22	LD 10 UH 10% 3R3 144 MA CHOKE	LD 026.4184	DELEVAN	DROSSEL1025-44	
L23	LD 0,15UH10%0,1OOHM1,23OA CHOKE	LD 067.2763	DELEVAN	DROSSEL1025-00	
L24	LD 1OONH 10% 0,08OHM 1,4A CHOKE	LD 067.2740	DELEVAN	DROSSEL1025-94	
L25	LD 1OONH 10% 0,08OHM 1,4A CHOKE	LD 067.2740	DELEVAN	DROSSEL1025-94	
L26	LD 4,7OUH10%1,2OOHMO,239A CHOKE	LD 067.2940	DELEVAN	DROSSEL1025-36	
L40	LD 4,7OUH10%1,2OOHMO,239A CHOKE	LD 067.2940	DELEVAN	DROSSEL1025-36	
L41	LD 0,15UH10%0,1OOHM1,23OA CHOKE	LD 067.2763	DELEVAN	DROSSEL1025-00	
L42	LD 10 UH 10% 3R3 144 MA CHOKE	LD 026.4184	DELEVAN	DROSSEL1025-44	
L43	LD 4,7OUH10%1,2OOHMO,239A CHOKE	LD 067.2940	DELEVAN	DROSSEL1025-36	
L60	LD 1UH/36PF Q60/27MHZ COIL	807.0126	TOKO	332 PN - 1233	
L61	LD 2,7UH/82PF Q100/11MHZ COIL	807.0132	COMPONEX	119 ANS-A 3499 GO	
L62	LD 1,6UH/-- Q70/8MHZ COIL	807.0149	COMPONEX	119 LNS-A4713 HM-	
L63	LD 5,6UH 4+12W FE-K COIL	807.0155	COMPONEX	P119 ACS-A5743 GO	
L80	LD 47,0UH10%4,5OOHMO,11OA CHOKE	LD 067.3060	DELEVAN	DROSSEL1025-60	
L81	LD 47,0UH10%4,5OOHMO,11OA CHOKE	LD 067.3060	DELEVAN	DROSSEL1025-60	
L110	LD 10 UH 10% 3R3 144 MA CHOKE	LD 026.4184	DELEVAN	DROSSEL1025-44	
L111	LD 0,33UH10%0,22OHMO,83OA CHOKE	LD 067.2805	DELEVAN	DROSSEL1025--08	
L160	LD 10 UH 10% 3R3 144 MA CHOKE	LD 026.4184	DELEVAN	DROSSEL1025-44	
L161	LD 10 UH 10% 3R3 144 MA CHOKE	LD 026.4184	DELEVAN	DROSSEL1025-44	
L162	LD 1,2OUH10%0,18OHMO,62OA CHOKE	LD 067.2870	DELEVAN	DROSSEL1025-22	
L163	LD 1,2OUH10%0,18OHMO,62OA CHOKE	LD 067.2870	DELEVAN	DROSSEL1025-22	
L164	LD UKW-DR.Z=750 OHM 5OMHZ CHOKE	LD 026.4578	VALVO	431202036641	
L165 ..168	LD 10 UH 10% 3R3 144 MA CHOKE	LD 026.4184	DELEVAN	DROSSEL1025-44	
L169	LD 1,2OUH10%0,18OHMO,62OA CHOKE	LD 067.2870	DELEVAN	DROSSEL1025-22	
L170	LD 10 UH 10% 3R3 144 MA CHOKE	LD 026.4184	DELEVAN	DROSSEL1025-44	
L171	LD 10 UH 10% 3R3 144 MA CHOKE	LD 026.4184	DELEVAN	DROSSEL1025-44	
L172	LD 10 UH 10% 3R3 144 MA CHOKE	LD 026.4184	DELEVAN	DROSSEL1025-44	
L173	LD 1,2OUH10%0,18OHMO,62OA CHOKE	LD 067.2870	DELEVAN	DROSSEL1025-22	

Kennz. Comp.No.	Benennung Designation	Sachnummer Stock No.	Hersteller Manufacturer	Bezeichnung Designation	enthalten in contained in
N60	BO SE5534AFE LOW N.OPAMP OPERATIONAL AMPLIFIER	BO 301.3335	SIGNETICS	SE5534AFE	
N140	BO LF412CN 2XFET OPAMP OPERATIONAL AMPLIFIER	356.0521	NSC	LF412CN	
N160	BO LM124J 4XL.P.OPAMP OPERATIONAL AMPLIFIER	300.6353	NSC	LM124J	
R1	RL 0,35W22,10 OHM+-1%TK50 RESISTOR	RL 082.9188	DRALORIC	SMA0207/22,10HM-F-D	
R2	RL 0,35W 10,0 OHM+-1%TK50 RESISTOR	RL 082.8852	DRALORIC	SMA0207/100HM-F-D	
R3	RS 0,5W50 OHM+-10%10X10X5 CERMET POTENTIOMETER T	RS 247.7861	BOURNS	3386F-1-500	
R4	RL 0,35W 274 OHM+-1%TK50 RESISTOR	RL 083.0178	DRALORIC	SMA0207/2740HM-F-D	
R5	RL 0,35W 475 OHM+-1%TK50 RESISTOR	RL 083.0390	DRALORIC	SMA0207/4750HM-F-D	
R6	RL 0,35W13,00 OHM+-1%TK50 RESISTOR	RL 082.8969	DRALORIC	SMA0207/13,00HM-F-D	
R7	RL 0,35W 90,9 OHM+-1%TK50 RESISTOR	RL 082.9742	DRALORIC	SMA0207/90,90HM-F-D	
R8	RL 0,35W13,00 OHM+-1%TK50 RESISTOR	RL 082.8969	DRALORIC	SMA0207/13,00HM-F-D	
R9	RL 0,35W 221 OHM+-1%TK50 RESISTOR	RL 083.0084	DRALORIC	SMA0207/2210HM-F-D	
R10	RL 0,35W 221 OHM+-1%TK50 RESISTOR	RL 083.0084	DRALORIC	SMA0207/2210HM-F-D	
R11	RL 0,35W 10,0KOHM+-1%TK50 RESISTOR	RL 083.1297	DRALORIC	SMA0207/10K-F-D	
R12	RL 0,35W 4,75KOHM+-1%TK50 RESISTOR	RL 083.1097	DRALORIC	SMA0207/4,75K-F-D	
R13	RL 0,35W 221 OHM+-1%TK50 RESISTOR	RL 083.0084	DRALORIC	SMA0207/2210HM-F-D	
R14	RS 0,5W2KOHM+-10%10X10X5 CERMET POTENTIOMETER T	RS 247.7884	BOURNS	3386F-1-202	
R15	RL 0,35W 3,32KOHM+-1%TK50 RESISTOR	RL 083.0990	DRALORIC	SMA0207/3,32K-F-D	
R16	RL 0,35W 56,2 OHM+-1%TK50 RESISTOR	RL 082.9571	DRALORIC	SMA0207/56,20HM-F-D	
R17	RL 0,35W5,62 OHM+-1% TK50 METALFILMRESISTOR	RL 099.8044	RESISTA	MK2 5,62 OHM 1% TK50	
R20	RL 0,35W 121 OHM+-1%TK50 RESISTOR	RL 082.9859	DRALORIC	SMA0207/1210HM-F-D	
R21	RL 0,35W 681 OHM+-1%TK50 RESISTOR	RL 083.0490	DRALORIC	SMA0207/6810HM-F-D	
R22	RL 0,35W 432 OHM+-1%TK50 DEPOS.-CARBON RESISTOR	RL 083.0355	DRALORIC	SMA0207/4320HM-F-D	
R23	RL 0,35W 332 OHM+-1%TK50 RESISTOR	RL 083.0255	DRALORIC	SMA0207/3320HM-F-D	
R24	RL 0,21W 22 OHM2% UNGEW. RESISTOR	RL 092.5879	RESISTA	MK1 220HM 2% UNGEW.	
R25	RL 0,21W 22 OHM2% UNGEW. RESISTOR	RL 092.5879	RESISTA	MK1 220HM 2% UNGEW.	
R26	RL 0,35W27,40 OHM+-1%TK50 RESISTOR	RL 082.9271	DRALORIC	SMA0207/27,40HM-F-D	
R27	RL 0,35W 33,2 OHM+-1%TK50 RESISTOR	RL 082.9359	DRALORIC	SMA0207/33,20HM-F-D	
R28	RL 0,35W27,40 OHM+-1%TK50 RESISTOR	RL 082.9271	DRALORIC	SMA0207/27,40HM-F-D	
R29	RL 0,35W 95,3 OHM+-1%TK50 RESISTOR	RL 082.9765	DRALORIC	SMA0207/95,30HM-F-D	
R30	RL 0,35W 1,1KOHM+-1%TK50 RESISTOR	RL 082.2483	DRALORIC	SMA 0207/1,10K-F-C	
R31	RL 0,35W 287 OHM+-1% TK50 RESISTOR	RL 083.0190	DRALORIC	SMA0207/2870HM-F-D	
R32	RL 0,35W 82,5 OHM+-1%TK50 RESISTOR	RL 082.9707	DRALORIC	SMA0207/82,50HM-F-D	
R33	RL 0,35W 243 OHM+-1%TK50 DEPOS.-CARBON RESISTOR	RL 083.0126	DRALORIC	SMA0207/2430HM-F-D	
R34	RL 0,21W 18 OHM2% UNGEW. RESISTOR	RL 092.5862	RESISTA	MK1 180HM 2% UNGEW.	
R35	RL 0,21W 15 OHM2% UNGEW. RESISTOR	RL 092.5856	RESISTA	MK1 150HM 2% UNGEW.	
R36	RL 0,35W11,00 OHM+-1%TK50 RESISTOR	RL 082.8898	DRALORIC	SMA0207/110HM-F-D	
R37	RL 0,35W 110 OHM+-1%TK50 RESISTOR	RL 082.9813	DRALORIC	SMA0207/1100HM-F-D	

Sis alle Rechte vor

Kennz. Comp.No.	Benennung Designation	Sachnummer Stock No.	Hersteller Manufacturer	Bezeichnung Designation	enthalten in contained in
R38	RL 0,35W11,00 OHM+-1%TK50 RESISTOR	RL 082.8898	DRALORIC	SMA0207/110HM-F-D	
R40	RL 0,35W 121 OHM+-1%TK50 RESISTOR	RL 082.9859	DRALORIC	SMA0207/1210HM-F-D	
R41	RL 0,35W 681 OHM+-1%TK50 RESISTOR	RL 083.0490	DRALORIC	SMA0207/6810HM-F-D	
R42	RL 0,35W 432 OHM+-1%TK50 DEPOS.-CARBON RESISTOR	RL 083.0355	DRALORIC	SMA0207/4320HM-F-D	
R43	RL 0,35W 332 OHM+-1%TK50 RESISTOR	RL 083.0255	DRALORIC	SMA0207/3320HM-F-D	
R44	RL 0,21W 22 OHM2% UNGEW. RESISTOR	RL 092.5879	RESISTA	MK1 220HM 2% UNGEW.	
R45	RL 0,21W 22 OHM2% UNGEW. RESISTOR	RL 092.5879	RESISTA	MK1 220HM 2% UNGEW.	
R46	RL 0,35W27,40 OHM+-1%TK50 RESISTOR	RL 082.9271	DRALORIC	SMA0207/27,40HM-F-D	
R47	RL 0,35W 33,2 OHM+-1%TK50 RESISTOR	RL 082.9359	DRALORIC	SMA0207/33,20HM-F-D	
R48	RL 0,35W27,40 OHM+-1%TK50 RESISTOR	RL 082.9271	DRALORIC	SMA0207/27,40HM-F-D	
R49	RL 0,21W 18 OHM2% UNGEW. RESISTOR	RL 092.5862	RESISTA	MK1 180HM 2% UNGEW.	
R50	RL 0,21W 15 OHM2% UNGEW. RESISTOR	RL 092.5856	RESISTA	MK1 150HM 2% UNGEW.	
R51	RL 0,35W 287 OHM+-1% TK50 RESISTOR	RL 083.0190	DRALORIC	SMA0207/2870HM-F-D	
R52	RL 0,35W 95,3 OHM+-1%TK50 RESISTOR	RL 082.9765	DRALORIC	SMA0207/95,30HM-F-D	
R53	RL 0,35W 1,1KOHM+-1%TK50 RESISTOR	RL 082.2483	DRALORIC	SMA 0207/1,10K-F-C	
R54	RL 0,35W 82,5 OHM+-1%TK50 RESISTOR	RL 082.9707	DRALORIC	SMA0207/82,50HM-F-D	
R55	RL 0,35W 243 OHM+-1%TK50 DEPOS.-CARBON RESISTOR	RL 083.0126	DRALORIC	SMA0207/2430HM-F-D	
R56	RL 0,35W11,00 OHM+-1%TK50 RESISTOR	RL 082.8898	DRALORIC	SMA0207/110HM-F-D	
R57	RL 0,35W 110 OHM+-1%TK50 RESISTOR	RL 082.9813	DRALORIC	SMA0207/1100HM-F-D	
R58	RL 0,35W11,00 OHM+-1%TK50 RESISTOR	RL 082.8898	DRALORIC	SMA0207/110HM-F-D	
R60	RL 0,35W 100KOHM+-1%TK50 RESISTOR	RL 082.1764	DRALORIC	SMA0207/100K-F-C	
R61	RL 0,35W 332 OHM+-1%TK50 RESISTOR	RL 083.0255	DRALORIC	SMA0207/3320HM-F-D	
R62	RL 0,35W 301 OHM+-1%TK50 RESISTOR	RL 083.0210	DRALORIC	SMA0207/3010HM-F-D	
R63	RL 0,35W 1MOHM+-1%TK50 RESISTOR	RL 082.7862	DRALORIC	SMA0207/1M-F-D	
R64	RL 0,35W15 OHM 1%TK50 RESISTOR	RL 082.9020	DRALORIC	SMA0207/150HM-F-D	
R65	RL 0,35W 47,5 OHM+-1%TK50 RESISTOR	RL 082.9507	DRALORIC	SMA0207/47,50HM-F-D	
R66	RL 0,35W 392 OHM+-1%TK50 RESISTOR	RL 082.2183	DRALORIC	SMA0207/392K-F-C	
R67	RL 0,35W 392 OHM+-1%TK50 RESISTOR	RL 082.2183	DRALORIC	SMA0207/392K-F-C	
R68	RL 0,35W 1KOHM+-1%TK50 RESISTOR	RL 082.2160	DRALORIC	SMA0207/1K-F-C	
R69	RL 0,35W 10,0KOHM+-1%TK50 RESISTOR	RL 083.1297	DRALORIC	SMA0207/10K-F-D	
R70	RL 0,35W 100 OHM+-1%TK50 METALFILM-RESISTOR	RL 082.6543	DRALORIC	SMA0207/100/HM-F-D	
R80	RL 0,35W 56,2 OHM+-1%TK50 RESISTOR	RL 082.9571	DRALORIC	SMA0207/56,20HM-F-D	
R81	RL 0,35W 56,2 OHM+-1%TK50 RESISTOR	RL 082.9571	DRALORIC	SMA0207/56,20HM-F-D	
R82	RL 0,35W 2,21KOHM+-1%TK50 RESISTOR	RL 082.2477	DRALORIC	SMA 0207/2,21K-F-C	
R83	RL 0,35W 47,5KOHM+-1%TK50 RESISTOR	RL 083.1800	DRALORIC	SMA/207/47,5K-F-C	
R84	RL 0,35W 221 OHM+-1%TK50 RESISTOR	RL 083.0084	DRALORIC	SMA0207/2210HM-F-D	
R85	RL 0,35W 221 OHM+-1%TK50 RESISTOR	RL 083.0084	DRALORIC	SMA0207/2210HM-F-D	
R86	RL 0,35W 1MOHM+-1%TK50 RESISTOR	RL 082.7862	DRALORIC	SMA0207/1M-F-D	
R87	RL 0,35W 221 OHM+-1%TK50 RESISTOR	RL 083.0084	DRALORIC	SMA0207/2210HM-F-D	

Kennz. Comp.No.	Benennung Designation	Sachnummer Stock No.	Hersteller Manufacturer	Bezeichnung Designation	enthalten in contained in
R88	RL 0,35W 221 OHM+-1%TK50 RESISTOR	RL 083.0084	DRALORIC	SMA0207/221OHM-F-D	
R91 ..94	RL 0,35W 475 OHM+-1%TK50 RESISTOR	RL 083.0390	DRALORIC	SMA0207/475OHM-F-D	
R95	RL 0,35W 100 OHM+-1%TK50 METALFILM-RESISTOR	RL 082.6543	DRALORIC	SMA0207/100/HM-F-D	
R96	RL 0,35W 1,50KOHM+-1%TK50 RESISTOR	RL 083.0732	DRALORIC	SMA0207/1,50K-F-D	
R97	RL 0,35W 274 OHM+-1%TK50 RESISTOR	RL 083.0178	DRALORIC	SMA0207/274OHM-F-D	
R98	RL 0,35W11,00 OHM+-1%TK50 RESISTOR	RL 082.8898	DRALORIC	SMA0207/11OHM-F-D	
R99	RL 0,35W 110 OHM+-1%TK50 RESISTOR	RL 082.9813	DRALORIC	SMA0207/1100HM-F-D	
R100	RL 0,35W11,00 OHM+-1%TK50 RESISTOR	RL 082.8898	DRALORIC	SMA0207/11OHM-F-D	
R101	RL 0,35W 475 OHM+-1%TK50 RESISTOR	RL 083.0390	DRALORIC	SMA0207/475OHM-F-D	
R106	RL 0,35W 1MOHM+-1%TK50 RESISTOR	RL 082.7862	DRALORIC	SMA0207/1M-F-D	
R109	RL 0,35W 221 OHM+-1%TK50 RESISTOR	RL 083.0084	DRALORIC	SMA0207/221OHM-F-D	
R110	RL 0,35W 274 OHM+-1%TK50 RESISTOR	RL 083.0178	DRALORIC	SMA0207/274OHM-F-D	
R111	RL 0,35W 1,50KOHM+-1%TK50 RESISTOR	RL 083.0732	DRALORIC	SMA0207/1,50K-F-D	
R112	RL 0,35W 100 OHM+-1%TK50 METALFILM-RESISTOR	RL 082.6543	DRALORIC	SMA0207/100/HM-F-D	
R113	RL 0,35W 82,5 OHM+-1%TK50 RESISTOR	RL 082.9707	DRALORIC	SMA0207/82,5OHM-F-D	
R114	RL 0,35W 47,5 OHM+-1%TK50 RESISTOR	RL 082.9507	DRALORIC	SMA0207/47,5OHM-F-D	
R115	RL 0,35W 243 OHM+-1%TK50 DEPOS.-CARBON RESISTOR	RL 083.0126	DRALORIC	SMA0207/243OHM-F-D	
R116	RL 0,35W 47,5 OHM+-1%TK50 RESISTOR	RL 082.9507	DRALORIC	SMA0207/47,5OHM-F-D	
R117	RL 0,35W 274 OHM+-1%TK50 RESISTOR	RL 083.0178	DRALORIC	SMA0207/274OHM-F-D	
R118	RL 0,35W 1,50KOHM+-1%TK50 RESISTOR	RL 083.0732	DRALORIC	SMA0207/1,50K-F-D	
R119	RL 0,35W 100 OHM+-1%TK50 METALFILM-RESISTOR	RL 082.6543	DRALORIC	SMA0207/100/HM-F-D	
R120	RL 0,35W 274 OHM+-1%TK50 RESISTOR	RL 083.0178	DRALORIC	SMA0207/274OHM-F-D	
R121	RL 0,35W 1,50KOHM+-1%TK50 RESISTOR	RL 083.0732	DRALORIC	SMA0207/1,50K-F-D	
R122	RL 0,35W 100 OHM+-1%TK50 METALFILM-RESISTOR	RL 082.6543	DRALORIC	SMA0207/100/HM-F-D	
R123	RL 0,35W 1KOHM+-1%TK50 RESISTOR	RL 082.2160	DRALORIC	SMA0207/1K-F-C	
R124	RL 0,35W 1KOHM+-1%TK50 RESISTOR	RL 082.2160	DRALORIC	SMA0207/1K-F-C	
R125	RL 0,35W 162 OHM+-1%TK50 RESISTOR	RL 082.9971	DRALORIC	SMA0207/162OHM-F-D	
R126	RL 0,35W 261 OHM+-1%TK50 RESISTOR	RL 083.0155	DRALORIC	SMA0207/261OHM-F-D	
R127	RL 0,35W 162 OHM+-1%TK50 RESISTOR	RL 082.9971	DRALORIC	SMA0207/162OHM-F-D	
R128	RL 0,35W 261 OHM+-1%TK50 RESISTOR	RL 083.0155	DRALORIC	SMA0207/261OHM-F-D	
R129	RL 0,35W 511 OHM+-1%TK50 RESISTOR	RL 083.0426	DRALORIC	SMA0207/511OHM-F-D	
R131	RL 0,35W 1KOHM+-1%TK50 RESISTOR	RL 082.2160	DRALORIC	SMA0207/1K-F-C	
R132	RL 0,35W22,10 OHM+-1%TK50 RESISTOR	RL 082.9188	DRALORIC	SMA0207/22,1OHM-F-D	
R133	RL 0,35W 681 OHM+-1%TK50 RESISTOR	RL 083.0490	DRALORIC	SMA0207/681OHM-F-D	
R134	RL 0,35W 121 OHM+-1%TK50 RESISTOR	RL 082.9859	DRALORIC	SMA0207/121OHM-F-D	
R135	RL 0,35W 475 OHM+-1%TK50 RESISTOR	RL 083.0390	DRALORIC	SMA0207/475OHM-F-D	
R136	RL 0,35W 1KOHM+-1%TK50 RESISTOR	RL 082.2160	DRALORIC	SMA0207/1K-F-C	
R137	RL 0,35W 261 OHM+-1%TK50 RESISTOR	RL 083.0155	DRALORIC	SMA0207/261OHM-F-D	
R138	RL 0,35W 162 OHM+-1%TK50 RESISTOR	RL 082.9971	DRALORIC	SMA0207/162OHM-F-D	

...ns alle Rechte vor

Kennz. Comp.No.	Benennung Designation	Sachnummer Stock No.	Hersteller Manufacturer	Bezeichnung Designation	enthalten in contained in
R139	RL 0,35W 10,0KOHM+-1%TK50 RESISTOR	RL 083.1297	DRALORIC	SMA0207/10K-F-D	
R140 ..143	RL 0,35W 1KOHM+-1%TK50 RESISTOR	RL 082.2160	DRALORIC	SMA0207/1K-F-C	
R145	RL 0,35W 10,0KOHM+-1%TK50 RESISTOR	RL 083.1297	DRALORIC	SMA0207/10K-F-D	
R146	RL 0,35W 10,0KOHM+-1%TK50 RESISTOR	RL 083.1297	DRALORIC	SMA0207/10K-F-D	
R147	RL 0,35W 10,0KOHM+-1%TK50 RESISTOR	RL 083.1297	DRALORIC	SMA0207/10K-F-D	
R148	RL 0,35W 1KOHM+-1%TK50 RESISTOR	RL 082.2160	DRALORIC	SMA0207/1K-F-C	
R149	RL 0,35W 47,5 OHM+-1%TK50 RESISTOR	RL 082.9507	DRALORIC	SMA0207/47,5OHM-F-D	
R150	RL 0,35W 1KOHM+-1%TK50 RESISTOR	RL 082.2160	DRALORIC	SMA0207/1K-F-C	
R151	RL 0,35W 221 OHM+-1%TK50 RESISTOR	RL 083.0084	DRALORIC	SMA0207/221OHM-F-D	
R152	RL 0,35W 1KOHM+-1%TK50 RESISTOR	RL 082.2160	DRALORIC	SMA0207/1K-F-C	
R153	RL 0,35W 4,75KOHM+-1%TK50 RESISTOR	RL 083.1097	DRALORIC	SMA0207/4,75K-F-D	
R154	RL 0,35W 2,00KOHM+-1%TK50 RESISTOR	RL 083.0826	DRALORIC	SMA0207/2,00K-F-D	
R155	RL 0,35W 221 OHM+-1%TK50 RESISTOR	RL 083.0084	DRALORIC	SMA0207/221OHM-F-D	
R156	RL 0,35W 1KOHM+-1%TK50 RESISTOR	RL 082.2160	DRALORIC	SMA0207/1K-F-C	
R157	RL 0,35W 1KOHM+-1%TK50 RESISTOR	RL 082.2160	DRALORIC	SMA0207/1K-F-C	
R158	RL 0,35W 1KOHM+-1%TK50 RESISTOR	RL 082.2160	DRALORIC	SMA0207/1K-F-C	
R160	RL 0,35W 1KOHM+-1%TK50 RESISTOR	RL 082.2160	DRALORIC	SMA0207/1K-F-C	
R161	RL 0,35W 1KOHM+-1%TK50 RESISTOR	RL 082.2160	DRALORIC	SMA0207/1K-F-C	
R162	RL 0,35W9,09KOHM+-0,1%T25 RESISTOR	RL 084.2980	DRALORIC	SMA0207/9,09K-B-E	
R163	RL 0,35W4,75KOHM+-0,1%T25 RESISTOR	RL 084.2445	DRALORIC	SMA/207/4,75K-B-E	
R164	RL 0,35W 562 OHM+-1%TK50 RESISTOR	RL 083.0461	DRALORIC	SMA0207/562OHM-F-D	
R165	RL 0,35W 10,0KOHM+-1%TK50 RESISTOR	RL 083.1297	DRALORIC	SMA0207/10K-F-D	
R166	RL 0,35W 10,0KOHM+-1%TK50 RESISTOR	RL 083.1297	DRALORIC	SMA0207/10K-F-D	
R167	RL 0,35W 332 OHM+-1%TK50 RESISTOR	RL 083.0255	DRALORIC	SMA0207/332OHM-F-D	
R168	RL 0,35W 332 OHM+-1%TK50 RESISTOR	RL 083.0255	DRALORIC	SMA0207/332OHM-F-D	
R169	RL 0,35W 332 OHM+-1%TK50 RESISTOR	RL 083.0255	DRALORIC	SMA0207/332OHM-F-D	
R170	RL 0,35W 10,0 OHM+-1%TK50 RESISTOR	RL 082.8852	DRALORIC	SMA0207/100HM-F-D	
R171	RL 0,35W 10,0KOHM+-1%TK50 RESISTOR	RL 083.1297	DRALORIC	SMA0207/10K-F-D	
R172	RL 0,35W 221 KOHM+-1%TK50 RESISTOR	RL 083.2270	DRALORIC	SMA0207/221K-F-C	
R173	RL 0,35W 10,0KOHM+-1%TK50 RESISTOR	RL 083.1297	DRALORIC	SMA0207/10K-F-D	
R174	RL 0,35W 3,32KOHM+-1%TK50 RESISTOR	RL 083.0990	DRALORIC	SMA0207/3,32K-F-D	
T1	LU UEBERTRAGER TRANSFORMER	807.4067			
V1 ..8	AE BB809 26/ 6PF CDI TUNING DIODE	AE 092.9616	VALVO	BB809	
V9	AM U310 N-D 25V JFET FET	AM 454.6217	SILICONIX	U310	
V10	AM U310 N-D 25V JFET FET	AM 454.6217	SILICONIX	U310	
V11	AE 5082-2800 SCHOTTKY DIODE	AE 012.9066	HEWLETT-P.	5082-2800	
V20	AK BFR96 N 15V 75MA TRANSISTOR	AK 093.2738	VALVO	BFR96	
V21	AK BFR96 N 15V 75MA TRANSISTOR	AK 093.2738	VALVO	BFR96	

Kennz. Comp.No.	Benennung Designation	Sachnummer Stock No.	Hersteller Manufacturer	Bezeichnung Designation	enthalten in contained in
V40	AK BFR96 N 15V 75MA TRANSISTOR	AK 093.2738	VALVO	BFR96	
V41	AK BFR96 N 15V 75MA TRANSISTOR	AK 093.2738	VALVO	BFR96	
V60	AD 1N4448 75V 0A15 UDI DIODE	AD 012.0700	TEXAS INST	1N4448 GEGURTET	
V61	AM J111A N-D 35V JFET FET	AM 214.7685	SILICONIX	J111A	
V62 ..65	AD 1N4448 75V 0A15 UDI DIODE	AD 012.0700	TEXAS INST	1N4448 GEGURTET	
V66	AE RICHTIGE SNR 012.2184 ZENER DIODE	AE 012.2584	VALVO	BZX79/C20	
V67	AE BZX79/C12 0,5W ZDI ZENER DIODE	AE 012.2532	VALVO	BZX55/C12 BZX79...	
V68	AD 1N4448 75V 0A15 UDI DIODE	AD 012.0700	TEXAS INST	1N4448 GEGURTET	
V69	AD 1N4448 75V 0A15 UDI DIODE	AD 012.0700	TEXAS INST	1N4448 GEGURTET	
V70	AE BZX79/C6V8 0,5W ZDI ZENER DIODE	AE 012.2478	VALVO	BZX79/C6V8	
V80	AM J111A N-D 35V JFET FET	AM 214.7685	SILICONIX	J111A	
V81	AM J111A N-D 35V JFET FET	AM 214.7685	SILICONIX	J111A	
V82	AK BFR96 N 15V 75MA TRANSISTOR	AK 093.2738	VALVO	BFR96	
V83	AE 5082-2800 SCHOTTKY DIODE	AE 012.9066	HEWLETT-P.	5082-2800	
V110	AK BFR96 N 15V 75MA TRANSISTOR	AK 093.2738	VALVO	BFR96	
V111	AE 5082-2800 SCHOTTKY DIODE	AE 012.9066	HEWLETT-P.	5082-2800	
V112	AE 5082-2800 SCHOTTKY DIODE	AE 012.9066	HEWLETT-P.	5082-2800	
V113	AK BFR96 N 15V 75MA TRANSISTOR	AK 093.2738	VALVO	BFR96	
V114	AE 5082-2800 SCHOTTKY DIODE	AE 012.9066	HEWLETT-P.	5082-2800	
V115	AK BFR96 N 15V 75MA TRANSISTOR	AK 093.2738	VALVO	BFR96	
V116	AD 1N4448 75V 0A15 UDI DIODE	AD 012.0700	TEXAS INST	1N4448 GEGURTET	
V117	AE 5082-2800 SCHOTTKY DIODE	AE 012.9066	HEWLETT-P.	5082-2800	
V118	AK BFQ24 P 12V 35MA TRANSISTOR	252.2635	VALVO	BFQ24	
V119	AD 1N4448 75V 0A15 UDI DIODE	AD 012.0700	TEXAS INST	1N4448 GEGURTET	
V140	AE BZX79/C6V8 0,5W ZDI ZENER DIODE	AE 012.2478	VALVO	BZX79/C6V8	R
V141	AE RICHTIGE SNR 012.5254 ZENER DIODE	AE 012.2455	VALVO	BZX79/C5V6	
V161	AL BDX77 N 80V 8A0 TRANSISTOR	AL 300.6318	VALVO	BDX77	
X2	FJ EINBAUWINKELST. SMC ANGLE CONNECTOR	FJ 249.9684	RADIALL	R 112 669	
X8	FJ EINBAUWINKELST. SMC ANGLE CONNECTOR	FJ 249.9684	RADIALL	R 112 669	
X15	FP INDIREKT.STECKERL.36P. PIN CONNECTOR 1-POLIG	FP 242.3600	BINDER	742-5-11-0178-00-36	
X16	FP KURZSCHLUSSBUCHSE SHORTING PLUG	FP 491.7042	PK	452-70302	
X17	FP INDIREKT.STECKERL.36P. PIN CONNECTOR 4-POLIG	FP 242.3600	BINDER	742-5-11-0178-00-36	
X18	FP INDIREKT.STECKERL.36P. PIN CONNECTOR 2-POLIG	FP 242.3600	BINDER	742-5-11-0178-00-36	
X20	FP KURZSCHLUSSBUCHSE SHORTING PLUG	FP 491.7042	PK	452-70302	
X21	FP IND.STECKERLEISTE 64 P MALE MULTIPOINT CONNECTOR	FP 273.0490	PANDUIT	100-964-033/999	
X25	FP INDIREKT.STECKERL.36P. PIN CONNECTOR 4-POLIG	FP 242.3600	BINDER	742-5-11-0178-00-36	

...s alle Rechte vor

Kennz. Comp.No.	Benennung Designation	Sachnummer Stock No.	Hersteller Manufacturer	Bezeichnung Designation	enthalten in contained in
X40	FP KURZSCHLUSSBUCHSE SHORTING PLUG	FP 491.7042	PK	452-70302	
X41	FP INDIREKT.STECKERL.36P. PIN CONNECTOR 4-POLIG	FP 242.3600	BINDER	742-5-11-0178-00-36	
X42	FP KURZSCHLUSSBUCHSE SHORTING PLUG	FP 491.7042	PK	452-70302	
X43	FP INDIREKT.STECKERL.36P. PIN CONNECTOR 4-POLIG	FP 242.3600	BINDER	742-5-11-0178-00-36	
X60	FP KURZSCHLUSSBUCHSE SHORTING PLUG	FP 491.7042	PK	452-70302	
X61	FP INDIREKT.STECKERL.36P. PIN CONNECTOR 4-POLIG	FP 242.3600	BINDER	742-5-11-0178-00-36	
X80	FP INDIREKT.STECKERL.36P. PIN CONNECTOR 2-POLIG	FP 242.3600	BINDER	742-5-11-0178-00-36	
X81	FP INDIREKT.STECKERL.36P. PIN CONNECTOR 2-POLIG	FP 242.3600	BINDER	742-5-11-0178-00-36	
X83	FP KURZSCHLUSSBUCHSE SHORTING PLUG	FP 491.7042	PK	452-70302	
X84	FP KURZSCHLUSSBUCHSE SHORTING PLUG	FP 491.7042	PK	452-70302	
X111	FP INDIREKT.STECKERL.36P. PIN CONNECTOR 1-POLIG	FP 242.3600	BINDER	742-5-11-0178-00-36	
X112	FP INDIREKT.STECKERL.36P. PIN CONNECTOR 1-POLIG	FP 242.3600	BINDER	742-5-11-0178-00-36	
X113	FP INDIREKT.STECKERL.36P. PIN CONNECTOR 1-POLIG	FP 242.3600	BINDER	742-5-11-0178-00-36	
X114	FP INDIREKT.STECKERL.36P. PIN CONNECTOR 1-POLIG	FP 242.3600	BINDER	742-5-11-0178-00-36	
X115	FP KURZSCHLUSSBUCHSE SHORTING PLUG	FP 491.7042	PK	452-70302	
X116	FP INDIREKT.STECKERL.36P. PIN CONNECTOR 2-POLIG	FP 242.3600	BINDER	742-5-11-0178-00-36	
X117	FP INDIREKT.STECKERL.36P. PIN CONNECTOR 1-POLIG	FP 242.3600	BINDER	742-5-11-0178-00-36	
X118	FP INDIREKT.STECKERL.36P. PIN CONNECTOR 1-POLIG	FP 242.3600	BINDER	742-5-11-0178-00-36	
X119	FP INDIREKT.STECKERL.36P. PIN CONNECTOR 1-POLIG	FP 242.3600	BINDER	742-5-11-0178-00-36	
X120	FP INDIREKT.STECKERL.36P. PIN CONNECTOR 1-POLIG	FP 242.3600	BINDER	742-5-11-0178-00-36	
X121	FP INDIREKT.STECKERL.36P. PIN CONNECTOR 1-POLIG	FP 242.3600	BINDER	742-5-11-0178-00-36	
X122	FP INDIREKT.STECKERL.36P. PIN CONNECTOR 1-POLIG	FP 242.3600	BINDER	742-5-11-0178-00-36	
X140	FP INDIREKT.STECKERL.36P. PIN CONNECTOR 1-POLIG	FP 242.3600	BINDER	742-5-11-0178-00-36	
X141	FP INDIREKT.STECKERL.36P. PIN CONNECTOR	FP 242.3600	BINDER	742-5-11-0178-00-36	
X142	FP INDIREKT.STECKERL.36P. PIN CONNECTOR 1X2POLIG	FP 242.3600	BINDER	742-5-11-0178-00-36	
X143	FP INDIREKT.STECKERL.36P. PIN CONNECTOR 1-POLIG	FP 242.3600	BINDER	742-5-11-0178-00-36	
X170	FP INDIREKT.STECKERL.36P. PIN CONNECTOR 1-POLIG	FP 242.3600	BINDER	742-5-11-0178-00-36	
					- ENDE -

M-OSZILLATOR · 50-95MHz

50-95MHz

M-TEILER

INTEGRATOR

PHASENDETEKTOR

20MHz
Referenzfrequenz

Zeichn. Nr. 807_0010_S

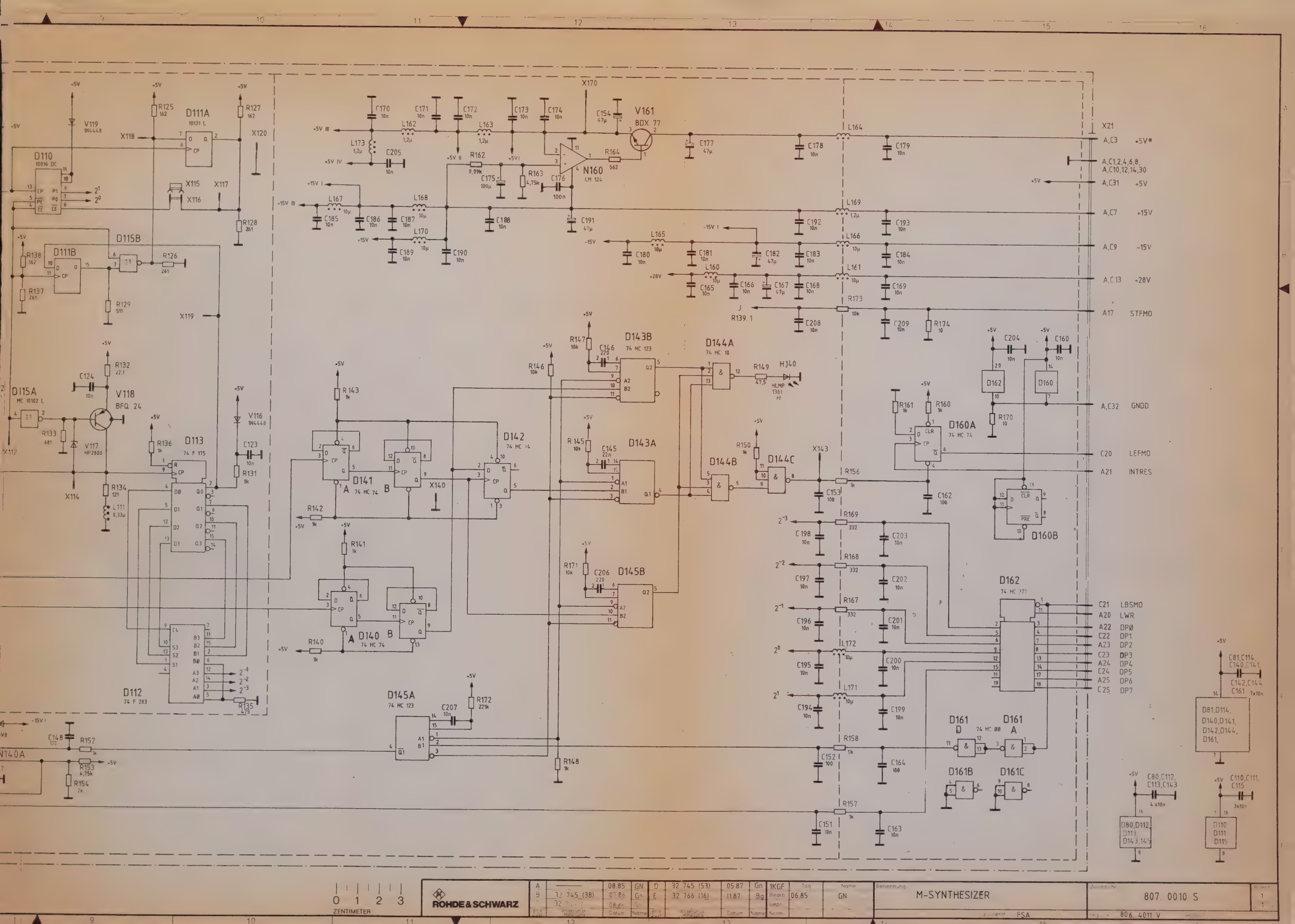

D110
10016 DC
D111A
10131 L
D111B
D115B
D115A
MC 10102 L
V118
BFQ 24
V117
HP2800
D113
74 F 175
D112
74 F 283
D141
74 HC 74
D142
74 HC 74
D140
74 HC 74
D143B
74 HC 123
D143A
D144A
74 HC 10
D144B
D144C
D145B
D145A
74 HC 123
N160
LM 124
V161
BDX 77
D160A
74 HC 74
D160B
D162
74 HC 377
D161
74 HC 00
D161B
D161C
X21
A,C3 +5V*
A,C1,2,4,6,8, A,C10,12,14,30
A,C31 +5V
A,C7 +15V
A,C9 -15V
A,C13 +28V
A17 STFMO
A,C32 GNDD
C20 LEFMO
A21 INTRES
C21 LBSMO
A20 LWR
A22 DP0
C22 DP1
A23 DP2
C23 DP3
A24 DP4
C24 DP5
A25 DP6
C25 DP7
D81,D114, D140,D141, D142,D144, D161,
D80,D112, D113, D143,145
D110 D111 D115
ZENTIMETER
ROHDE&SCHWARZ
M-SYNTHESIZER
807. 0010 S
FSA
806. 4011 V

Ansicht und Leitungsführung Bauteilseite
View of tracks on component side

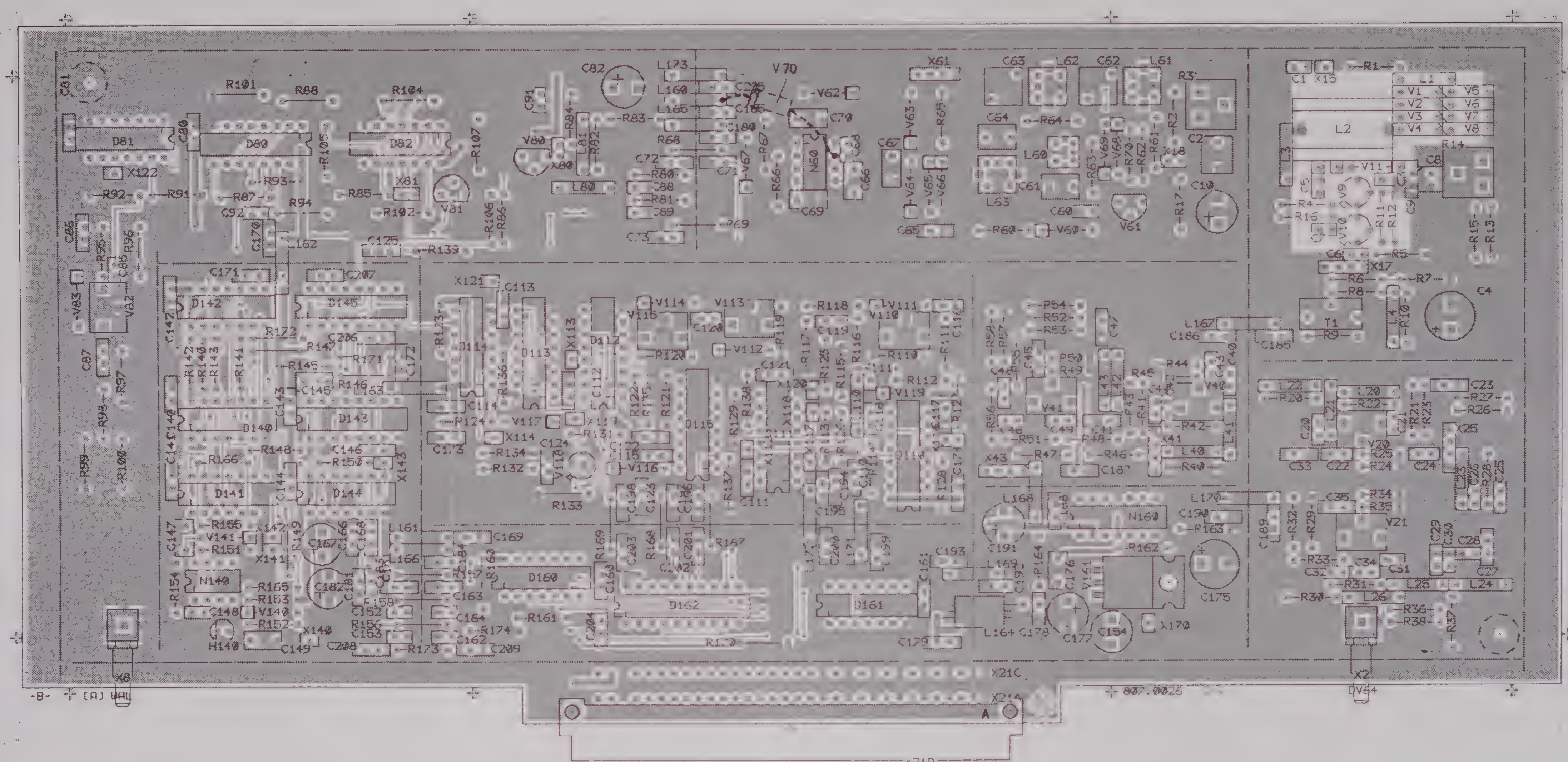

VARIANTENERKLÄRUNG/VERSION
VAR 02 – GRUNDAUSFÜHRUNG/BASIC MODEL

(hierzu HVC 2501)

ACHTUNG EGB!
Elektrostatisch gefährdete Bauelemente erfordern eine besondere Handhabung.

ATTENTION ESD!
Electrostatic sensitive devices require a special handling.

D	32745( )	07.86	GN
E	32 745 (53)	05.87	Gn
H	32 766	12.87	GN
And Zust	Anderungs-Mitteilung	Tag	Name

Maße ohne Toleranzangabe		
1KGF	Tag	Name
Bearb.	07.86	GN
Gepr		
Norm		

ROHDE&SCHWARZ

zu Gerät FSA

Maßstab 1 : 1

Halbzeug, Werkstoff

Benennung: M - SYNTHESIZER | Z

Zeichn.-Nr 807.0010.01 EE | Blatt-Nr 2 | v Bl.

reg. i. V 806.4011 V | erste Z. 806.4011

Für diese Unterlage behalten wir uns alle Rechte vor.

Ansicht und Leitungsführung Lötseite
View of tracks on solder side

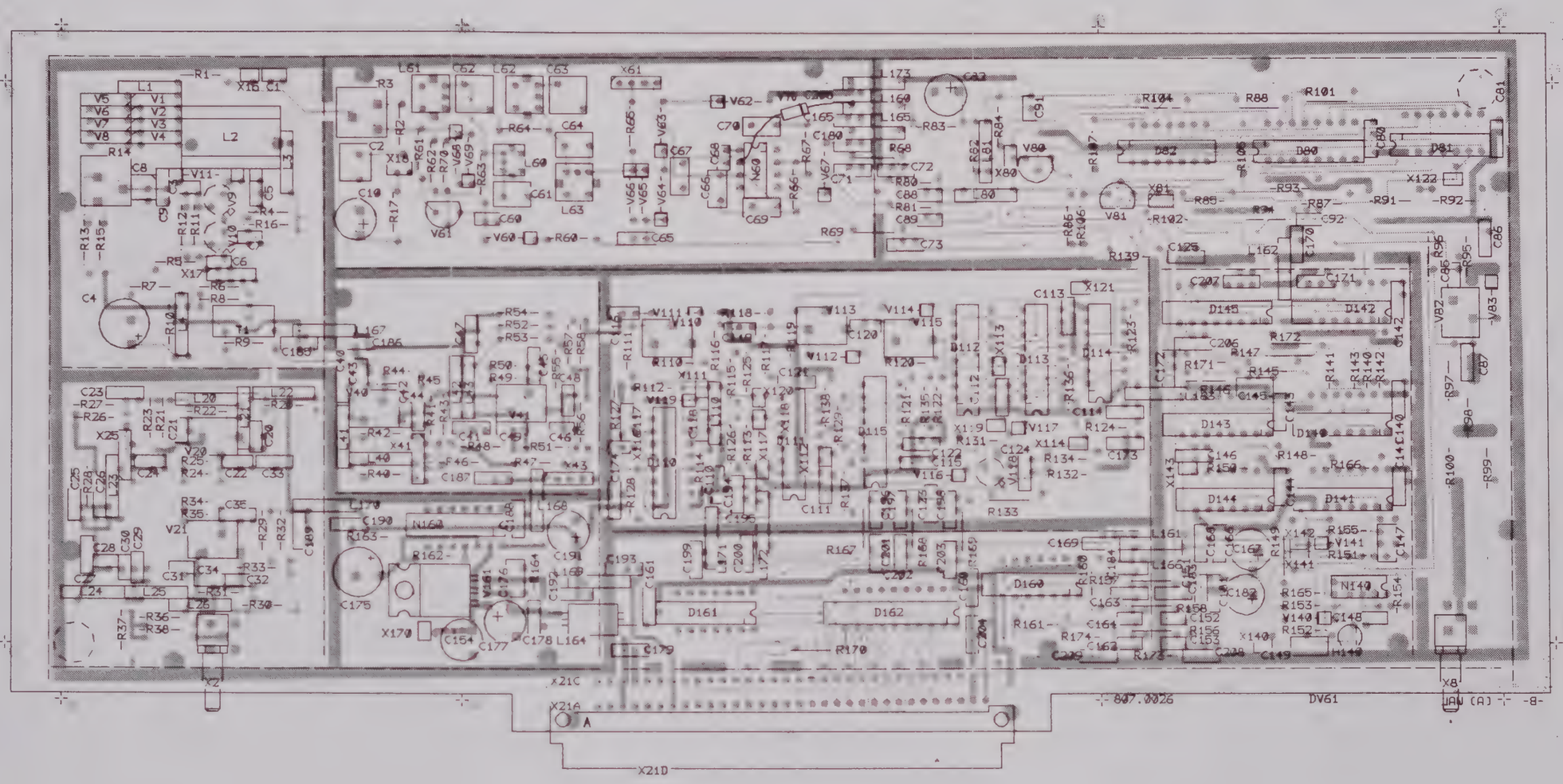

VARIANTENERKLÄRUNG/VERSION
VAR 02 – GRUNDAUSFÜHRUNG/BASIC MODEL

D	32 745 ( )	07.86	GN
E	32 745 (53)	05.87	Gn
H	32 766	12-87	GN

And. Zust	Anderungs-Mitteilung	Tag	Name

Maße ohne Toleranzangabe

1KGF	Tag	Name
Bearb	07.86	GN
Gepr.		
Norm		

zu Gerat FSA

Maßstab 1 : 1

Halbzeug, Werkstoff

Benennung: M-SYNTHESIZER | Z

ROHDE&SCHWARZ

Zeichn.-Nr: 807.0010.01 | EE | Blatt-Nr. 3 | v | Bl

reg. i. V 806.4011 V | erste Z 806.4011

(herzu HVC 250)

ACHTUNG EGB!
Elektrostatisch gefährdete Bauelemente erfordern eine besondere Handhabung
ATTENTION ESD!
Electrostatic sensitive devices require a special handling

Unterlage behalten
s alle Rechte vor

ROHDE&SCHWARZ

Measuring Instruments
and Systems Division

MICROFILMED

Service Manual

SPECTRUM ANALYZER

RF UNIT

FSB

848.0020.52

VOLUME 3

Service manual consists of 3 volumes

Printed in the Federal
Republic of Germany

Operating Manual

1 Specifications

2 Operation

Service Manual

Volume 1

3 Performance Test

4 Service Instructions for Complete Instrument

Volume 2

5 Service Instructions RF Unit

6 Service Instructions for Modules of RF Unit

	Order No.	Index
Attenuator	849.3517.00	1
RF Module	848.9511.02	2
Preamplifier 3rd IF	848.8009.02	3
YIG Synchronization	849.2010.02	4
YIG Pretune + YIG Oscillator	848.6506.02	5
2nd LO/3rd Converter	848.3507.02	6
M Synthesizer	807.0010.02	7

Volume 3

6 Service Instructions for Modules of RF Unit

N Synthesizer	849.1014.02	1
Summing Loop	807.4015.02	2
Sweep Synthesizer	807.5011.02	3
Reference 2	807.3019.02	4
Reference 1	848.5000.02	5
Frequency Processor	810.3400.02	6
Interface	807.7014.02	7
Keyboard	806.4811.02	8
Power Supply, A21	808.4819.02	9
Power Supply, A22	808.4519.02	10

6 Service Instructions for Modules of RF Unit

Index

N Synthesizer 1
Summing Loop 2
Sweep Synthesizer 3
Reference 2 4
Reference 1 5
Frequency Processor 6
Interface 7
Keyboard 8
Power Supply, A21 9
Power Supply, A22 10

ROHDE&SCHWARZ

SERVICE DOCUMENTATION

N Synthesizer

849.1014.02

Contents

		Page
6	**Service Instructions N Synthesizer**	6.1
6.1	**Function Description**	6.1
6.2	**Testing and Adjustment**	6.4
6.2.1	Testing the DC Voltage at X150	6.4
6.2.2	Adjusting the Oscillator	6.4
6.2.3	Testing the RF Amplifier	6.4
6.2.4	Testing the IF Amplifier	6.4
6.2.5	Testing the Frequency Divider	6.4
6.2.6	Testing the Settling Time, Lock-in Indication, Interrupt LEFNO	6.5
6.2.7	Testing the Tuning Voltage STFNO	6.5
6.2.8	Final Test	6.5
6.3	Troubleshooting	6.6

Parts lists
Circuit diagrams
Component location plans

6 Service Instructions N Synthesizer

(See circuit diagram 849.1014 S)

6.1 Function Description

The N synthesizer module outputs a frequency from 203.864 to 211.538 MHz. The oscillator frequency is converted to an IF of 3.864 to 11.538 MHz by a 200 MHz signal and is controlled by a PLL to the M synthesizer frequency 3.864 to 11.538 MHz divided by the N divider.

The oscillator in a Clapp circuit has a high Q factor; it is tuned by four diode quartets connected antiparallel. The oscillator signal is applied via switching diodes V11 and V12 to the amplifier stage with V30 which drives the power divider T60 via an attenuator. The oscillator signal is applied via the amplifier stages with V40 and V50 to output X8 (203.864 to 211.538 MHz) which controls the YIG synchronization module.

The oscillator signal is also applied via the buffer stages with V60 and V70 to the power stage with V81 which amplifies the oscillator signal to + 17 dBm and, as a local oscillator, drives the mixer U120. The oscillator frequency is converted here with the 200-MHz signal from the reference 2 module. The mixer is terminated on the IF side by a frequency separating filter which guarantees matching at low and high frequencies. The low-frequency components are amplified by the low-noise amplifier stage with V131. The lowpass C137, L131, C139 ensures further suppression of undesired high-frequency mixture products.

The IF signal is applied via the amplifier stage with V150 and the TTL limitating stage with V151 to the phase detector where it is compared with the M synthesizer signal divided by the N divider.

N frequency divider

The signal of 50 to 97.5 MHz from the M synthesizer is divided in the N frequency divider with a ratio of N = 6.25 to 17. The minimum step size is 0.25. The frequency divider itself functions in an analog manner to the M frequency divider described in the M synthesizer module except that the two least significant bits of adder D184 are set to Low in this case thus defining the smallest step size of 0.25 = 1/4.

The division ratio N is set such that the divided frequency at D180/5, 6 is between 3.864 and 11.538 MHz.

Phase detector

In the phase detector consisting of D161 and D160C, the oscillator frequency converted to the IF is compared with the divided frequency 3.864 to 11.538 MHz and correction signals are generated for readjusting the oscillator.

Integrator

The differential integrator N220 generates the tuning voltage for the oscillators from the pulsed output signals of the phase detector. The loop filter with L220 and L17 attenuates the spurious of $f \geq 1.25$ MHz which are produced by the fractional N divider ratio to values which no longer interfere.

The control bandwidth can be adjusted to an optimum value using R15.

Lock-in indication

The lock-in indication operates in an analog manner to the circuit described in the Service Manual M Synthesizer.

In the case of a non-synchronized PLL, LED H140 lights up and Low is present at D265/8. Unlocked state is stored in flip-flop D271. The line INTRES can be used to delete an interrupt LEFNO = Low, i.e. set to High if D271/4 is High at this time.

N240/D and V150 generate the supply voltage of + 5.1 V for the TTL and ECL components from the voltage + 5 V* (approx. 5.5 V), any noise on the 5 V* are largely suppressed.

The control data for the N synthesizer are latched in D162. (See following table for control code.)

Digital interface of N synthesizer

Data transfer to N synthesizer module

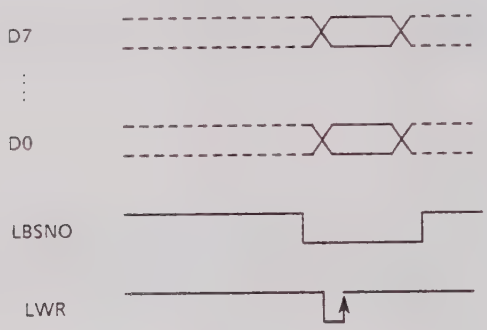

Note: The data are transferred by the rising edge of the LWR signal if LBSNO is Low at this time.

Setting code of N synthesizer

N	X21 C25 DP7	A25 DP6	C24 DP5	A24 DP4	C23 DP3	A23 DP2	C22 DP1	A22 DP0	Dec. equi-valent
6.25	0	1	1	0	1	0	1	1	107
6.5	0	1	1	0	1	0	1	0	106
6.75	0	1	1	0	1	0	0	1	105
7	0	1	1	0	1	0	0	0	104
7.25	0	1	1	0	1	0	1	1	103
7 5	0	1	1	0	0	1	1	0	102
7 75	0	1	1	0	0	1	0	1	101
8	0	1	1	0	0	1	0	0	100
8.25	0	1	1	0	0	1	1	1	99
8.5	0	1	1	0	0	1	1	0	98
8.75	0	1	1	0	0	1	0	1	97
9	0	1	1	0	0	0	0	0	96
9 25	0	1	1	0	0	0	1	1	95
9 5	0	1	1	0	0	0	1	0	94
9.75	0	1	1	0	0	0	0	1	93
10	0	1	0	1	1	1	0	0	92
10 25	0	1	0	1	1	1	1	1	91
10.5	0	1	0	1	1	1	1	0	90
10.75	0	1	0	1	1	1	0	1	89
11	0	1	0	1	1	0	0	0	88
11.25	0	1	0	1	1	0	1	1	87
11.5	0	1	0	1	1	0	1	0	86
11.75	0	1	0	1	1	0	0	1	85
12	0	1	0	1	0	1	0	0	84
12.25	0	1	0	1	0	1	1	1	83
12.5	0	1	0	1	0	1	1	0	82
12.75	0	1	0	1	0	1	0	1	81
13	0	1	0	1	0	0	0	0	80
13.5	0	1	0	1	0	0	1	0	78
14	0	1	0	0	1	1	0	0	76
14 5	0	1	0	0	1	1	1	0	74
15	0	1	0	0	1	0	0	0	72
15.5	0	1	0	0	1	0	1	0	70
16	0	1	0	0	0	1	0	0	68
16.5	0	1	0	0	0	1	1	0	66
17	0	1	0	0	0	0	0	0	64

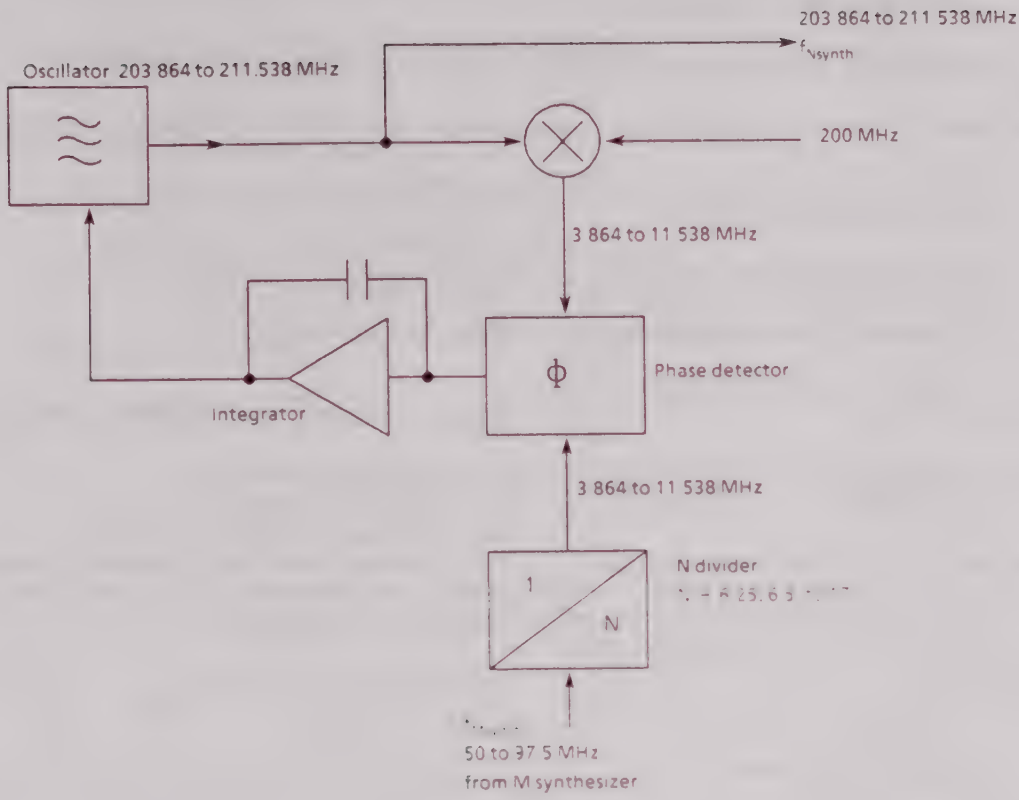

Fig. 6-1 Block diagram of N synthesizer module

6.2 Testing and Adjustment

6.2.1 Testing the DC Voltage at X150

Nominal value: + 5.1 to + 5.3 V

6.2.2 Adjusting the Oscillator

Apply tuning voltage of 2.5 to 18 V to X220/1.
Connect analyzer to X30/2, cover top and bottom of oscillator chambers during measurement.

Switch on oscillator; enter centre frequency 50 MHz (span = 0 Hz).

Set tuning voltage of 17.5 V and adjust oscillator frequency to 211.5 MHz ± 100 kHz using C7.

Test whether f = 201 to 203.8 MHz with 2.5 V.

Adjust frequency to 208 MHz ± 1 MHz using tuning voltage: nominal oscillator level: + 7 dBm ± 1.5 dB.

6.2.3 Testing the RF Amplifier

Connect signal generator to X31/3:
P = + 7 dBm, f = 208 MHz
Connect analyzer to X8:
adjust level to maximum using L50.
Test level from 203.8 to 211.5 MHz:
nominal value: + 8 dBm ± 1 dB.

Connect analyzer to X82/1:
adjust to maximum at f = 208 MHz using L71.

Test level from 203.8 to 211.5 MHz:
nominal value: + 17 dBm + 2 dB/-1.5 dB.

Connect signal with f = 200 MHz, + 10 dBm to X6. Adjust level at X121/2 to maximum using L111.
Nominal value: –1 dBm ± 1.5 dB.

6.2.4 Testing the IF Amplifier

Connect signal with f = 200 MHz, 10 dBm to X6.
Plug in jumpers, tune oscillator from 203.8 to 211.5 MHz.
Nominal level at X131/2: + 4 dBm ± 1.5 dB.
Plug in jumper X132.
Measure level at X182 using oscilloscope:
nominal value: 2 V_{pp} ± 0.5 V
Check for TTL level at V151/1.

6.2.5 Testing the Frequency Divider

Connect signal generator to X1:
P = + 5 dBm, f = 50/100 MHz.
Connect frequency counter to X183.
Test frequency according to following table (depending on divider factor and transmitter frequency), vary centre frequency (span = 0 Hz).

Nominal frequency ± 1 digit.

N	f = 50 MHz	f = 100 MHz	Centre frequency [MHz]
6.25	8	16	4980
6.5	7.6923	15.3846	10
6.75	7.4405	14.8809	190
7	7.1428	14.2857	390
8	6.25	13	1190
17	2.9412	5.8823	1530

6.2.6 Testing the Settling Time, Lock-in Indication, Interrupt LEFNO

Preliminary adjustment: Rotate R15 to centre position.
Rotate R226 fully clockwise.

Close PLL; switch centre frequency back and forth between 40 and 50 MHz.

LED H140 should light up briefly at each new frequency setting.

It should light permanently:
- without a signal at X1
- without an oscillator signal (e.g. remove X82).

Check signals according to following timing diagram using storage oscilloscope (TTL level).

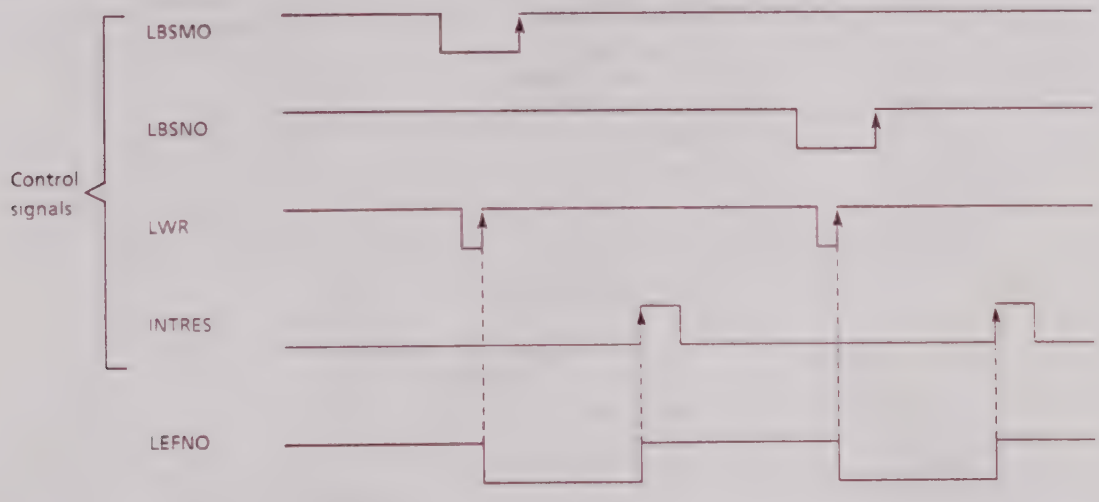

6.2.7 Testing the Tuning Voltage STFNO

Set f = 211.538 MHz (centre frequency 90 MHz, span = 0 Hz).

Nominal voltage at X20: 17.5 V ± 0.5 V.
Nominal voltage at X21/A17: (V_{X20}/10) = 1.75 V ± 50 mV

6.2.8 Final Test

Screw on covers, connect analyzer to output X8. Test the output frequency, spurious and level at the following centre frequencies (span = 0 Hz):

Centre frequency [MHz]	N synthesizer frequency [MHz]	Level	Spurious (fm = 10 kHz to 5 MHz)
90	211.538	*)	**)
200	207.777	*)	**)
600	207.241	*)	**)
5190	203.846	*)	**)
3390	204.651	*)	**)

*) +8 dBm ± 1.5 dB
**) >80 dB

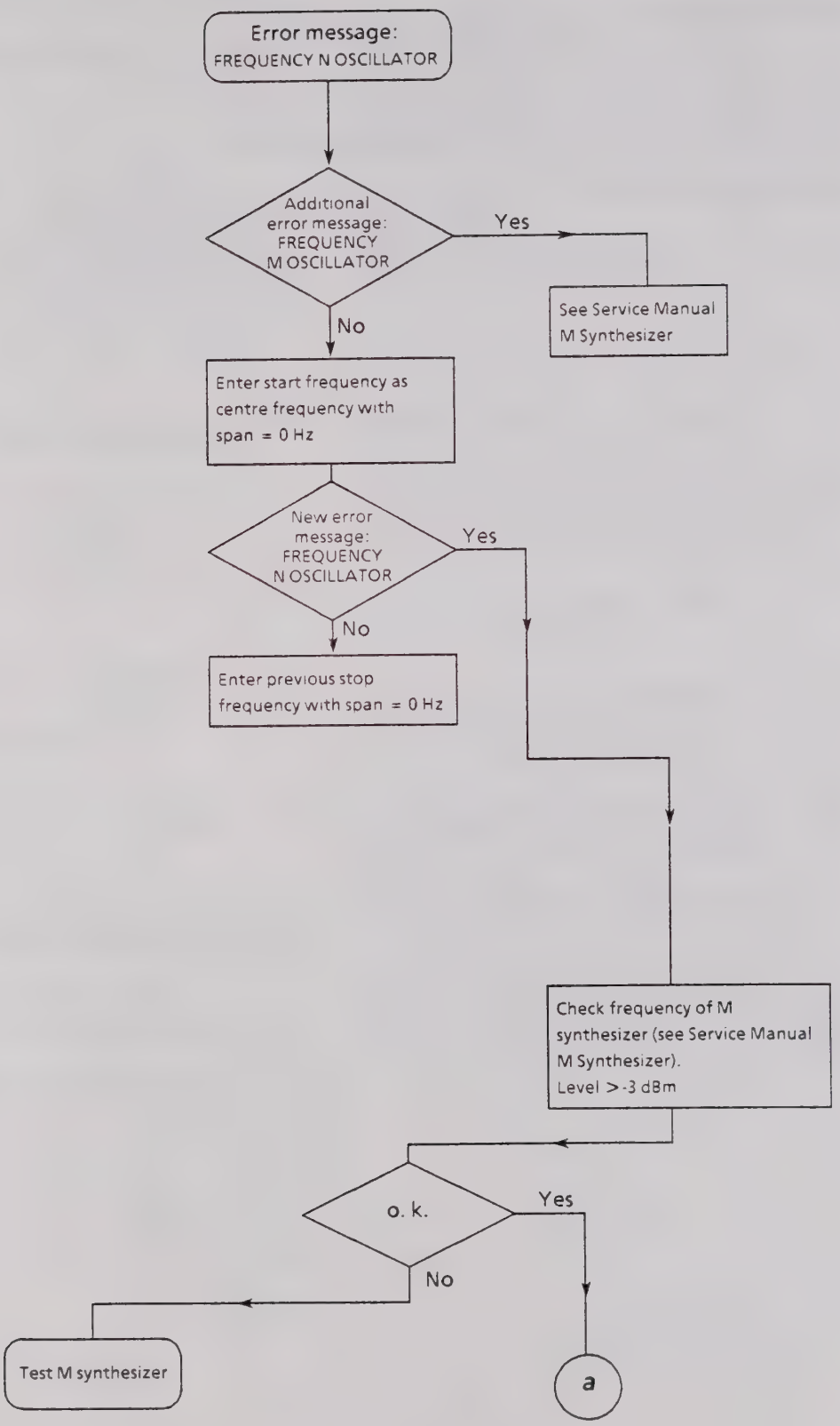
Error message:
FREQUENCY N OSCILLATOR
Additional error message: FREQUENCY M OSCILLATOR
Yes
See Service Manual M Synthesizer
No
Enter start frequency as centre frequency with span = 0 Hz
New error message: FREQUENCY N OSCILLATOR
Yes
No
Enter previous stop frequency with span = 0 Hz
Check frequency of M synthesizer (see Service Manual M Synthesizer).
Level > -3 dBm
o. k.
Yes
No
Test M synthesizer
a

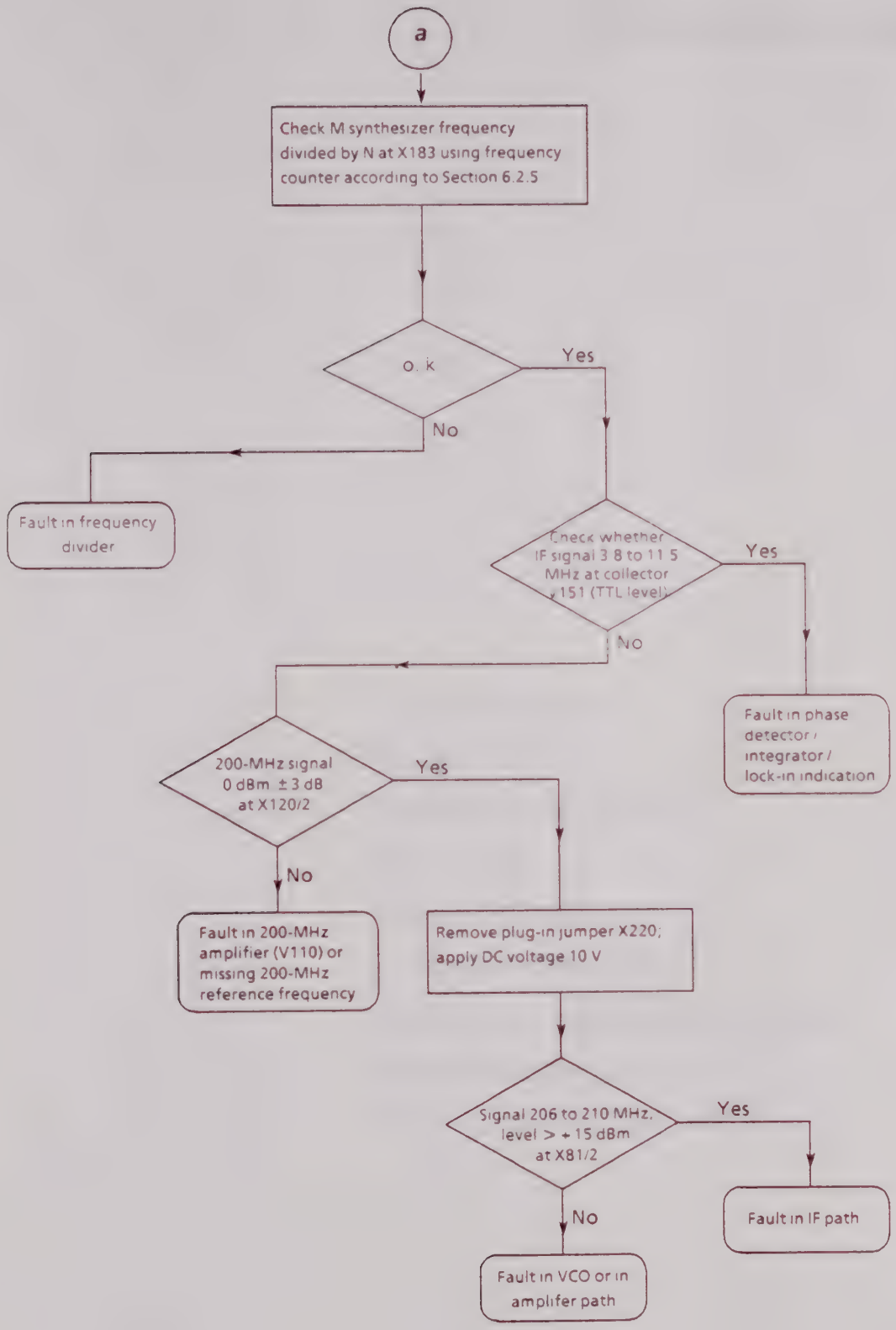
a
Check M synthesizer frequency divided by N at X183 using frequency counter according to Section 6.2.5
o. k
Yes
No
Fault in frequency divider
Check whether IF signal 3 8 to 11 5 MHz at collector v151 (TTL level)
Yes
No
Fault in phase detector / integrator / lock-in indication
200-MHz signal 0 dBm ±3 dB at X120/2
Yes
No
Fault in 200-MHz amplifier (V110) or missing 200-MHz reference frequency
Remove plug-in jumper X220; apply DC voltage 10 V
Signal 206 to 210 MHz, level > + 15 dBm at X81/2
Yes
No
Fault in IF path
Fault in VCO or in amplifer path

ROHDE&SCHWARZ

Schaltteillisten
Stromläufe
Bestückungspläne

Part lists
Circuit diagrams
Components plans

Listes des pièces détachées
Schémas de Circuit
Plans des composants

(R 29500 Bl 2)
895.1000 BL 2

Kennz. Comp.No.	Benennung Designation	Sachnummer Stock No.	Hersteller Manufacturer	Bezeichnung Designation	enthalten in contained in
C1	CE 47UF-10+50% 40V 9X13 ELECTROLYTIC CAPACITOR	CE 006.7142	ROEDERST	EK 00 CB 247 G	
C3	CC 1NF+-10%63V K2000 CERAMIC CAPACITOR	CC 022.0784	VALVO	2222 63051 102	
C4	CC 22PF+- 5%100V NPO VIEL CERAMIC CAPACITOR	CC 060.0694	UNIONCARB	C052C220J2G1CA	
C5	CC 15PF+- 5%100V NPO VIEL CERAMIC CAPACITOR	CC 060.0671	UNIONCARB	C052C150J2G1CA	
C6	CC 5 PF 5% N033/IB RD5 CERAMIC CAPACITOR	022.0378	DRALORIC	N033/IB5/0,25SP5	
C7	CT 9,2PF TAUCHTR.RD 7X12 AIR-TYPE TRIMMER	CT 025.7367	TEKELEC	LUFTTRAT5200	
C8	CC 5 PF 5% N033/IB PD5 CERAMIC CAPACITOR NUR VAR/ONLY MOD: 03	022.0378	DRALORIC	N033/IB5/0,25SP5	
C8	CC 4,7PF+-0,25PFNPO/IBRD5 CAPACITOR NUR VAR/ONLY MOD: 02	450.6935	STETTNER	SDPL5:4,7PF/0,25NPO	
C9	CC 470PF+-10%3X4R2000 CAPACITOR	CC 087.6993	VALVO	2222 63051 471	
C11	CC 1NF+-10%63V K2000 CERAMIC CAPACITOR NUR VAR/ONLY MOD: 03	CC 022.0784	VALVO	2222 63051 102	
C12	CC 22PF+- 5%100V NPO VIEL CERAMIC CAPACITOR NUR VAR/ONLY MOD: 03	CC 060.0694	UNIONCARB	C052C220J2G1CA	
C13	CC 15PF+- 5%100V NPO VIEL CERAMIC CAPACITOR NUR VAR/ONLY MOD: 03	CC 060.0671	UNIONCARB	C052C150J2G1CA	
C14	CC 5 PF 5% N033/IB RD5 CERAMIC CAPACITOR NUR VAR/ONLY MOD: 03	022.0378	DRALORIC	N033/IB5/0,25SP5	
C15	CT 9,2PF TAUCHTR.RD 7X12 AIR-TYPE TRIMMER NUR VAR/ONLY MOD: 03	CT 025.7367	TEKELEC	LUFTTRAT5200	
C16	CC 4,7PF+-0,25PFNPO/IBRD5 CAPACITOR NUR VAR/ONLY MOD: 03	450.6935	STETTNER	SDPL5:4,7PF/0,25NPO	
C17	CC 470PF+-10%3X4R2000 CAPACITOR NUR VAR/ONLY MOD: 03	CC 087.6993	VALVO	2222 63051 471	
C18	CE 4,7UF+-20%35V 7X 5X11 ELECTROLYTIC CAPACITOR	CE 022.8204	ROEDERSTEI	ETR 3 4,7/40 20%	
C19	CC 1NF+-10%63V K2000 CERAMIC CAPACITOR	CC 022.0784	VALVO	2222 63051 102	
C20	CC 10NF-20+50%7X8R4000 CAPACITOR	CC 087.7525	VALVO	2222 63051 64051103	
C21	CC 10NF-20+50%7X8R4000 CAPACITOR	CC 087.7525	VALVO	2222 63051 64051103	
C22	CC 10NF-20+50%7X8R4000 CAPACITOR	CC 087.7525	VALVO	2222 63051 64051103	
C23	CC 10NF-20+50%7X8R4000 CAPACITOR NUR VAR/ONLY MOD: 03	CC 087.7525	VALVO	2222 63051 64051103	
C24	CC 10NF-20+50%7X8R4000 CAPACITOR	CC 087.7525	VALVO	2222 63051 64051103	
C25	CC 10NF-20+50%7X8R4000 CAPACITOR NUR VAR/ONLY MOD: 03	CC 087.7525	VALVO	2222 63051 64051103	
C26	CE 47UF-10+50% 40V 9X13 ELECTROLYTIC CAPACITOR	CE 006.7142	ROEDERST	EK 00 CB 247 G	
C27	CC 180PF+-2%6X7N750 CAPACITOR NUR VAR/ONLY MOD: 02	CC 087.6935	VALVO	2222 678 58181	
C30	CC 2,2NF+-10%5X6R2000 CAPACITOR	CC 087.7060	VALVO	2222 63051 222	
C32	CC 470PF+-10%3X4R2000 CAPACITOR	CC 087.6993	VALVO	2222 63051 471	
C33	CC 12PF+-2%3X4NPO CAPACITOR	CC 087.6435	VALVO	2222 678 10129	
C40	CC 10NF-20+50%7X8R4000 CAPACITOR	CC 087.7525	VALVO	2222 63051 64051103	
C41	CC 220PF+-2%63V6,5X8 N750 CAPACITOR	CC 092.7771	STETTNER	EGPZ2.5 220PF2%N750	
C42	CC 27PF+-2%4X5NPO CAPACITOR	CC 087.6470	VALVO	2222 678 10279	
C43	CC 82PF+-2%6X7NPO CAPACITOR	CC 087.6535	VALVO	2222 678 10829	

Fü... Unterlage enthalten wir ... alle Rechte vor

Kennz. Comp.No.	Benennung Designation	Sachnummer Stock No.	Hersteller Manufacturer	Bezeichnung Designation	enthalten in contained in
C44	CC 470PF+-10%3X4R2000 CAPACITOR	CC 087.6993	VALVO	2222 63051 471	
C50	CC 220PF+-2%6X7N750 CAPACITOR	CC 087.6941	VALVO	2222 678 58221	
C51	CC 220PF+-2%6X7N750 CAPACITOR	CC 087.6941	VALVO	2222 678 58221	
C57	CC 10NF-20+50%7X8R4000 CAPACITOR	CC 087.7525	VALVO	2222 63051 64051103	
C59	CC 18PF+-2%3X4NP0 CAPACITOR	CC 087.6458	VALVO	2222 678 10189	
C60	CC 470PF+-10%3X4R2000 CAPACITOR	CC 087.6993	VALVO	2222 63051 471	
C61	CC 2,2NF+-10%5X6R2000 CAPACITOR	CC 087.7060	VALVO	2222 63051 222	
C63	CC 470PF+-10%3X4R2000 CAPACITOR	CC 087.6993	VALVO	2222 63051 471	
C64	CC 27PF+-2%4X5NP0 CAPACITOR	CC 087.6470	VALVO	2222 678 10279	
C65	CC 10NF-20+50%7X8R4000 CAPACITOR	CC 087.7525	VALVO	2222 63051 64051103	
C70	CC 470PF+-10%3X4R2000 CAPACITOR	CC 087.6993	VALVO	2222 63051 471	
C71	CC 220PF+-2%63V6.5X8 N750 CAPACITOR	CC 092.7771	STETTNER	EGPZ2.5 220PF2%N750	
C72	CC 18PF+-2%3X4NP0 CAPACITOR	CC 087.6458	VALVO	2222 678 10189	
C73	CC 10NF-20+50%7X8R4000 CAPACITOR	CC 087.7525	VALVO	2222 63051 64051103	
C74	CC 10NF-20+50%7X8R4000 CAPACITOR	CC 087.7525	VALVO	2222 63051 64051103	
C80	CE 2,2UF+-20%20V 5X 4X 7 ELECTROLYTIC CAPACITOR	CE 022.8104	ROEDERSTEI	ETR 1 2,2/20 20%	
C81	CC 220PF+-2%6X7N750 CAPACITOR	CC 087.6941	VALVO	2222 678 58221	
C82	CC 10NF-20+50%7X8R4000 CAPACITOR	CC 087.7525	VALVO	2222 63051 64051103	
C83	CC 10NF-20+50%7X8R4000 CAPACITOR	CC 087.7525	VALVO	2222 63051 64051103	
C84	CC 2,2NF+-10%5X6R2000 CAPACITOR	CC 087.7060	VALVO	2222 63051 222	
C85	CC 220PF+-2%6X7N750 CAPACITOR	CC 087.6941	VALVO	2222 678 58221	
C86	CC 33PF+-2%4X5NP0 CAPACITOR	CC 087.6487	VALVO	2222 678 10339	
C87	CC 10NF-20+50%7X8R4000 CAPACITOR	CC 087.7525	VALVO	2222 63051 64051103	
C88	CC 10NF-20+50%7X8R4000 CAPACITOR	CC 087.7525	VALVO	2222 63051 64051103	
C90	CC 18PF+-2%3X4NP0 CAPACITOR	CC 087.6458	VALVO	2222 678 10189	
C112	CC 220PF+-2%63V6,5X8 N750 CAPACITOR	CC 092.7771	STETTNER	EGPZ2,5 220PF2%N750	
C115	CC 18PF+-2%3X4NP0 CAPACITOR	CC 087.6458	VALVO	2222 678 10189	
C116	CC 220PF+-2%6X7N750 CAPACITOR	CC 087.6941	VALVO	2222 678 58221	
C117	CC 4,7NF+-20%63V7X8 K2000 CAPACITOR	CC 092.7907	STETTNER	EGPZ 6X9 4.7NF D2000	
C118	CC 10NF-20+50%7X8R4000 CAPACITOR	CC 087.7525	VALVO	2222 63051 64051103	
C120	CC 56PF+-2%5X6NP0 CAPACITOR	CC 087.6512	VALVO	2222 678 10569	
C121	CC 33PF+-2%4X5NP0 CAPACITOR	CC 087.6487	VALVO	2222 678 10339	
C122	CC 100PF+-2%6X9NP0 CAPACITOR	CC 087.6541	VALVO	2222 678 10101	
C123	CC 270PF+-2%6X9N750 CAPACITOR	CC 087.6958	DRALORIC	EDPU6X9/270/2%N750	
C125	CC 27PF+-2%4X5NP0 CAPACITOR	CC 087.6470	VALVO	2222 678 10279	
C126	CC 39PF+-2%4X5NP0 CAPACITOR	CC 087.6493	VALVO	2222 678 10399	
C130	CC 33PF+-2%4X5NP0 CAPACITOR	CC 087.6487	VALVO	2222 678 10339	
C131	CC 47NF+-10%50V5K1200VIEL CAPACITOR	CC 082.7810	UNION CARB	CK05BX473K	
C132	CC 6,8PF+-0,25PF50V NP0 CERAMIC CHIP CAPACITOR	CC 007.8236	VITRAMON	VJ1206 A 6R8 C FAT	

Kennz. Comp.No.	Benennung Designation	Sachnummer Stock No.	Hersteller Manufacturer	Bezeichnung Designation	enthalten in contained in
C133	CC 10NF-20+50%7X8R4000 CAPACITOR	CC 087.7525	VALVO	2222 63051 64051103	
C134	CC 10NF-20+50%7X8R4000 CAPACITOR	CC 087.7525	VALVO	2222 63051 64051103	
C136	CC 47NF+-10%50V5K1200VIEL CAPACITOR	CC 082.7810	UNION CARB	CKO5BX473K	
C137	CC 68PF+-2%6X7NP0 CAPACITOR	CC 087.6529	VALVO	2222 678 10689	
C139	CC 68PF+-2%6X7NP0 CAPACITOR	CC 087.6529	VALVO	2222 678 10689	
C140	CC 39PF+-2%4X5NP0 CAPACITOR	CC 087.6493	VALVO	2222 678 10399	
C143 ..146	CC 10NF-20+50%7X8R4000 CAPACITOR	CC 087.7525	VALVO	2222 63051 64051103	
C147	CK 220NF+-5%63V5RM MKT CAPACITOR	CK 099.2952	WIMA	MKS2/63/0,22UF/5%	
C150	CC 47NF+-10%50V5K1200VIEL CAPACITOR	CC 082.7810	UNION CARB	CKO5BX473K	
C151	CC 56PF+-2%5X6NP0 CAPACITOR	CC 087.6512	VALVO	2222 678 10569	
C152	CC 10NF-20+50%7X8R4000 CAPACITOR	CC 087.7525	VALVO	2222 63051 64051103	
C153	CC 47NF+-10%50V5K1200VIEL CAPACITOR	CC 082.7810	UNION CARB	CKO5BX473K	
C154	CC 47NF+-10%50V5K1200VIEL CAPACITOR	CC 082.7810	UNION CARB	CKO5BX473K	
C159	CC 22PF+-2%4X5NP0 CAPACITOR NUR VAR/ONLY MOD: 03	CC 087.6464	VALVO	2222 678 10229	
C160	CC 10NF-20+50%7X8R4000 CAPACITOR	CC 087.7525	VALVO	2222 63051 64051103	
C161	CC 10NF-20+50%7X8R4000 CAPACITOR	CC 087.7525	VALVO	2222 63051 64051103	
C162	CC 22PF+-2%4X5NP0 CAPACITOR NUR VAR/ONLY MOD: 03	CC 087.6464	VALVO	2222 678 10229	
C163	CC 33PF+-2%4X5NP0 CAPACITOR NUR VAR/ONLY MOD: 03	CC 087.6487	VALVO	2222 678 10339	
C168	CC 10NF-20+50%7X8R4000 CAPACITOR	CC 087.7525	VALVO	2222 63051 64051103	
C169	CC 10NF-20+50%7X8R4000 CAPACITOR	CC 087.7525	VALVO	2222 63051 64051103	
C170	CC 10NF-20+50%7X8R4000 CAPACITOR	CC 087.7525	VALVO	2222 63051 64051103	
C171	CC 10NF-20+50%7X8R4000 CAPACITOR	CC 087.7525	VALVO	2222 63051 64051103	
C172	CC 1UF+-10%50V7K1200VIEL CAPACITOR	084.5538	UNION CARB	CKO6BX105K	
C180 ..185	CC 10NF-20+50%7X8R4000 CAPACITOR	CC 087.7525	VALVO	2222 63051 64051103	
C187	CC 10NF-20+50%7X8R4000 CAPACITOR	CC 087.7525	VALVO	2222 63051 64051103	
C188	CC 10NF-20+50%7X8R4000 CAPACITOR	CC 087.7525	VALVO	2222 63051 64051103	
C189	CC 10NF-20+50%7X8R4000 CAPACITOR	CC 087.7525	VALVO	2222 63051 64051103	
C190	CC 2,2NF+-10%5X6R2000 CAPACITOR	CC 087.7060	VALVO	2222 63051 222	
C191	CC 1NF+-10%63V K2000 CERAMIC CAPACITOR	CC 022.0784	VALVO	2222 63051 102	
C192	CC 1NF+-10%63V K2000 CERAMIC CAPACITOR	CC 022.0784	VALVO	2222 63051 102	
C193	CC 2,2NF+-10%5X6R2000 CAPACITOR	CC 087.7060	VALVO	2222 63051 222	
C195	CC 10NF-20+50%7X8R4000 CAPACITOR	CC 087.7525	VALVO	2222 63051 64051103	
C196	CC 10NF-20+50%7X8R4000 CAPACITOR	CC 087.7525	VALVO	2222 63051 64051103	
C220	CC 100PF+-2%6X9NP0 CAPACITOR	CC 087.6541	VALVO	2222 678 10101	
C221	CC 1,8NF+-10%4X5R2000 CAPACITOR	CC 087.7054	VALVO	2222 63051 182	
C222	CC 1NF+-10%63V K2000 CERAMIC CAPACITOR	CC 022.0784	VALVO	2222 63051 102	
C223	CK 220NF+-5%63V5RM MKT CAPACITOR	CK 099.2952	WIMA	MKS2/63/0,22UF/5%	

Für ... Unterlage behalten wir ... alle Rechte vor

Kennz. Comp.No.	Benennung Designation	Sachnummer Stock No.	Hersteller Manufacturer	Bezeichnung Designation	enthalten in contained in
C224	CC 100NF+-10%50V5K1200VIE CAPACITOR	CC 084.5350	UNION CARB	CKO5BX104K	
C225	CC 2,7PF+-0,25PF3X4P100 CAPACITOR	CC 087.6229	VALVO	2222 678 03278	
C226	CC 100NF+-10%50V5K1200VIE CAPACITOR	CC 084.5350	UNION CARB	CKO5BX104K	
C227	CC 1,5NF+-10%4X5R2000 CAPACITOR	CC 087.7048	VALVO	2222 63051 152	
C228	CC 1,5NF+-10%4X5R2000 CAPACITOR	CC 087.7048	VALVO	2222 63051 152	
C229	CK 220NF+-5%63V5RM MKT CAPACITOR	CK 099.2952	WIMA	MKS2/63/0,22UF/5%	
C230	CE 47UF-10+50% 40V 9X13 ELECTROLYTIC CAPACITOR	CE 006.7142	ROEDERST	EK 00 CB 247 G	
C231	CC 5,6NF+-10%100V5K1200VI CERAMIC CAPACITOR	082.7427	UNION CARB	CKO5BX562K	
C232	CC 5,6NF+-10%100V5K1200VI CERAMIC CAPACITOR	082.7427	UNION CARB	CKO5BX562K	
C239	CC 100NF+-10%50V5K1200VIE CAPACITOR	CC 084.5350	UNION CARB	CKO5BX104K	
C240	CC 10NF-20+50%7X8R4000 CAPACITOR	CC 087.7525	VALVO	2222 63051 64051103	
C241	CC 220PF+-2%6X7N750 CAPACITOR	CC 087.6941	VALVO	2222 678 58221	
C242	CC 220PF+-2%6X7N750 CAPACITOR	CC 087.6941	VALVO	2222 678 58221	
C243	CC 100NF+-10%50V5K1200VIE CAPACITOR	CC 084.5350	UNION CARB	CKO5BX104K	
C244	CE 100UF-10+50% 16V 9X13 ELECTROLYTIC CAPACITOR	CE 006.7165	ROEDERST	EK 00CB 310 D	
C245	CC 100NF+-10%50V5K1200VIE CAPACITOR	CC 084.5350	UNION CARB	CKO5BX104K	
C246	CC 10NF-20+50%7X8R4000 CAPACITOR	CC 087.7525	VALVO	2222 63051 64051103	
C247	CE 100UF-10+50% 16V 9X13 ELECTROLYTIC CAPACITOR	CE 006.7165	ROEDERST	EK 00CB 310 D	
C248	CC 10NF-20+50%7X8R4000 CAPACITOR	CC 087.7525	VALVO	2222 63051 64051103	
C249	CE 47UF-10+50% 40V 9X13 ELECTROLYTIC CAPACITOR	CE 006.7142	ROEDERST	EK 00 CB 247 G	
C250	CC 10NF-20+50%7X8R4000 CAPACITOR	CC 087.7525	VALVO	2222 63051 64051103	
C251	CE 47UF-10+50% 40V 9X13 ELECTROLYTIC CAPACITOR	CE 006.7142	ROEDERST	EK 00 CB 247 G	
C252	CC 10NF-20+50%7X8R4000 CAPACITOR	CC 087.7525	VALVO	2222 63051 64051103	
C253	CE 47UF-10+50% 40V 9X13 ELECTROLYTIC CAPACITOR	CE 006.7142	ROEDERST	EK 00 CB 247 G	
C254	CC 10NF-20+50%7X8R4000 CAPACITOR	CC 087.7525	VALVO	2222 63051 64051103	
C255	CC 4,7NF+-20%63V7X8 K2000 CAPACITOR	CC 092.7907	STETTNER	EGPZ 6X9 4.7NF D2000	
C256 ..263	CC 10NF-20+50%7X8R4000 CAPACITOR	CC 087.7525	VALVO	2222 63051 64051103	
C264	CE 100UF-10+50% 16V 9X13 ELECTROLYTIC CAPACITOR	CE 006.7165	ROEDERST	EK 00CB 310 D	
C265 ..268	CC 10NF-20+50%7X8R4000 CAPACITOR	CC 087.7525	VALVO	2222 63051 64051103	
C270	CC 10NF-20+50%7X8R4000 CAPACITOR	CC 087.7525	VALVO	2222 63051 64051103	
C271	CC 10NF-20+50%7X8R4000 CAPACITOR	CC 087.7525	VALVO	2222 63051 64051103	
C274	CC 10NF-20+50%7X8R4000 CAPACITOR	CC 087.7525	VALVO	2222 63051 64051103	
C275	CC 10NF-20+50%7X8R4000 CAPACITOR	CC 087.7525	VALVO	2222 63051 64051103	
C276	CC 10NF-20+50%7X8R4000 CAPACITOR	CC 087.7525	VALVO	2222 63051 64051103	
C277	CC 10NF-20+50%7X8R4000 CAPACITOR	CC 087.7525	VALVO	2222 63051 64051103	
C280 ..284	CC 10NF-20+50%7X8R4000 CAPACITOR	CC 087.7525	VALVO	2222 63051 64051103	
C285	CC 10NF-20+50%7X8R4000 CAPACITOR	CC 087.7525	VALVO	2222 63051 64051103	
C286 ..294	CC 10NF-20+50%7X8R4000 CAPACITOR	CC 087.7525	VALVO	2222 63051 64051103	
C298	CC 100PF+-2%63V4,5X6 N750 CAPACITOR	CC 092.7736	STETTNER	EGPZ2,5 100PF2%N750	

Kennz. Comp.No.	Benennung Designation	Sachnummer Stock No.	Hersteller Manufacturer	Bezeichnung Designation	enthalten in contained in
C299	CC 10NF-20+50%7X8R4000 CAPACITOR	CC 087.7525	VALVO	2222 63051 64051103	
D160	BL 74AC00SC 4X2IN NAND QUAD NAND GATTER	820.3477	NSC	74AC00SC	
D161	BL 74AC74SC 2XD-FLIPFL DUAL D-TYPE FLIPF	820.3602	NSC	74AC74SC	
D180	BL 74AC74SC 2XD-FLIPFL DUAL D-TYPE FLIPF	820.3602	NSC	74AC74SC	
D181	BL MC10131L 2XD FLIPFL FLIP FLOP	BL 475.1166	MOTOROLA	MC10131L	
D182	BL MC10102L 4X2INP.NORG NOR GATE	BL 350.0007	MOTOROLA	MC10102L	
D183	BL F10016DC 4B. COUNTER COUNTER	BL 344.7049	FAIRCHILD	10016DC	
D184	BL 74F283PC 4BIT-BIN.ADD 4BIT BINARY FULL ADDER	BL 373.6482	FAIRCHILD	74F283PC	
D185	BL 74F175PC 4XD-FLIPF. QUAD D FLIP-FLOP	BL 344.7355	FAIRCHILD	74F175PC	
D265	BL MM74HC10N 3X3IN.NAND TRIPLE 3-INPUT NAND GATE	BL 571.3294	MOTOROLA	MC74HC10N	
D266	BL TC74HC123P 2XMULTIVIB DUAL MONOST.MULTIVIBRATOR	379.7145	TOSHIBA	TC74HC123P	
D267	BL TC74HC123P 2XMULTIVIB DUAL MONOST.MULTIVIBRATOR	379.7145	TOSHIBA	TC74HC123P	
D268	BL PC74HCT74P 2XD-FF DUAL D-FLIP-FLOP	BL 571.3436	VALVO	PC74HCT74P	
D269	BL 74AC74SC 2XD-FLIPFL DUAL D-TYPE FLIPF	820.3602	NSC	74AC74SC	
D271	BL MM74HC74N 2XD-FLIPFL DUAL D FLIP-FLOP	BL 571.3171	NSC	MM74HC74N	
D272	BL PC74HC377P 8XD-FF EN OCTAL D-FLIP-FLOP	BL 806 0045	VALVO	PC74HC377P	
H140	AF QLMP1379 LED RT RCG LED	AF 257 4736	HEWLETT	QLMP1379	
L1	LD UKW-DR.Z=750 OHM 50MHZ CHOKE	LD 026.4578	VALVO	431202036641	
L2	LD 1,50UH10%Q,220HMO,560A CHOKE	LD 067.2886	DELEVAN	DROSSEL 1025-24	
L3	LD 1,50UH10%Q,220HMO,560A CHOKE	LD 067.2886	DELEVAN	DROSSEL 1025-24	
L4	LD 1,50UH10%Q,220HMO,560A CHOKE	LD 067.2886	DELEVAN	DROSSEL 1025-24	
L5	LD UKW-DR.Z=750 OHM 50MHZ CHOKE	LD 026.4578	VALVO	431202036641	
L6	LD SPULE	807.2135			
L7	LD SPULE	807.2129			
L8	LD UKW-DR.Z=750 OHM 50MHZ CHOKE	LD 026.4578	VALVO	431202036641	
L9	NUR VAR/ONLY MOD: 03 LD 1,50UH10%Q,220HMO,560A CHOKE	LD 067.2886	DELEVAN	DROSSEL 1025-24	
L10	NUR VAR/ONLY MOD: 03 LD 1,50UH10%Q,220HMO,560A CHOKE	LD 067.2886	DELEVAN	DROSSEL 1025-24	
L11	NUR VAR/ONLY MOD: 03 LD 1,50UH10%Q,220HMO,560A CHOKE	LD 067.2886	DELEVAN	DROSSEL 1025-24	
L12	NUR VAR/ONLY MOD: 03 LD 1,50UH10%Q,220HMO,560A CHOKE	LD 067.2886	DELEVAN	DROSSEL 1025-24	
L13	NUR VAR/ONLY MOD: 03 LD UKW-DR.Z=750 OHM 50MHZ CHOKE	LD 026.4578	VALVO	431202036641	
L14	NUR VAR/ONLY MOD: 03 LD SPULE	807.2135			
L15	NUR VAR/ONLY MOD: 03 LD SPULE	807.2129			
L16	NUR VAR/ONLY MOD: 03 LD 1,50UH10%Q,220HMO,560A CHOKE	LD 067.2886	DELEVAN	DROSSEL 1025-24	
L17	LD 150 UH10%15,00HMO,061A CHOKE	LD 067.3124	DELEVAN	DROSSEL1025-72	
L18	LD 1,20UH10%Q,180HMO,620A CHOKE	LD 067.2870	DELEVAN	DROSSEL1025-22	

Für [illegible] Unterlagen behalten wir [illegible] alle Rechte vor

Kennz. Comp.No.	Benennung Designation	Sachnummer Stock No.	Hersteller Manufacturer	Bezeichnung Designation	enthalten in contained in
L19	LD 1,20UH10%0,180HMO,620A CHOKE	LD 067.2870	DELEVAN	DROSSEL1025-22	
L20	LD 10 UH 10% 3R3 144 MA CHOKE	LD 026.4184	DELEVAN	DROSSEL1025-44	
L21	LD 10 UH 10% 3R3 144 MA CHOKE NUR VAR/ONLY MOD: 03	LD 026.4184	DELEVAN	DROSSEL1025-44	
L30	LD 2,20UH10%0,400HMO,415A CHOKE	LD 067.2905	DELEVAN	DROSSEL1025-28	
L32	LD 2,20UH10%0,400HMO,415A CHOKE	LD 067.2905	DELEVAN	DROSSEL1025-28	
L40	LD 2,20UH10%0,400HMO,415A CHOKE	LD 067.2905	DELEVAN	DROSSEL1025-28	
L41	LD 2,20UH10%0,400HMO,415A CHOKE	LD 067.2905	DELEVAN	DROSSEL1025-28	
L43	LD 1,20UH10%0,180HMO,620A CHOKE	LD 067.2870	DELEVAN	DROSSEL1025-22	
L50	LD SPULE 53NH 2,5W FE-K CHOKE	300.6653	COMPONEX	E521HN-020023	
L51	LD 0,15UH10%0,100HM1,230A CHOKE	LD 067.2763	DELEVAN	DROSSEL1025-00	
L60	LD 2,20UH10%0,400HMO,415A CHOKE	LD 067.2905	DELEVAN	DROSSEL1025-28	
L61	LD 2,20UH10%0,400HMO,415A CHOKE	LD 067.2905	DELEVAN	DROSSEL1025-28	
L62	LD 1,20UH10%0,180HMO,620A CHOKE	LD 067.2870	DELEVAN	DROSSEL1025-22	
L70	LD 0,15UH10%0,100HM1,230A CHOKE	LD 067.2763	DELEVAN	DROSSEL1025-00	
L71	LD SPULE 53NH 2,5W FE-K CHOKE	300.6653	COMPONEX	E521HN-020023	
L79	LD 100NH 10% 0,080HM 1,4A CHOKE	LD 067.2740	DELEVAN	DROSSEL1025-94	
L80	LD 2,20UH10%0,400HMO,415A CHOKE	LD 067.2905	DELEVAN	DROSSEL1025-28	
L81	LD 1,20UH10%0,180HMO,620A CHOKE	LD 067.2870	DELEVAN	DROSSEL1025-22	
L82	LD 1,20UH10%0,180HMO,620A CHOKE	LD 067.2870	DELEVAN	DROSSEL1025-22	
L111	LD SPULE 53NH 2,5W FE-K CHOKE	300.6653	COMPONEX	E521HN-020023	
L112	LD 0,15UH10%0,100HM1,230A CHOKE	LD 067.2763	DELEVAN	DROSSEL1025-00	
L113	LD 1,20UH10%0,180HMO,620A CHOKE	LD 067.2870	DELEVAN	DROSSEL1025-22	
L120	LD 0,12UH10%0,090HM1,300A CHOKE	LD 067.2757	DELEVAN	DROSSEL1025-96	
L121	LD 0,22UH10%0,140HM1,045A CHOKE	LD 067.2786	DELEVAN	DROSSEL1025-04	
L122	LD 0,33UH10%0,220HMO,830A CHOKE	LD 067.2805	DELEVAN	DROSSEL1025--08	
L131	LD 0,22UH10%0,140HM1,045A CHOKE	LD 067.2786	DELEVAN	DROSSEL1025-04	
L132	LD 0,12UH10%0,090HM1,300A CHOKE	LD 067.2757	DELEVAN	DROSSEL1025-96	
L133	LD 0,12UH10%0,090HM1,300A CHOKE	LD 067.2757	DELEVAN	DROSSEL1025-96	
L134	LD 33,0UH10%3,400HMO,130A CHOKE	LD 067.3047	DELEVAN	DROSSEL 1025-56	
L135	LD 1,20UH10%0,180HMO,620A CHOKE	LD 067.2870	DELEVAN	DROSSEL1025-22	
L136	LD 0,27UH10%0,160HMO,975A CHOKE	LD 067.2792	DELEVAN	DROSSEL1025-06	
L137	LD 1,20UH10%0,180HMO,620A CHOKE	LD 067.2870	DELEVAN	DROSSEL1025-22	
L138	LF ROHRK.RD3,6XRD1,2XL3,3 TUBULAR CORE	LF 026.9286			
L152	LD 1,20UH10%0,180HMO,620A CHOKE	LD 067.2870	DELEVAN	DROSSEL1025-22	
L153	LD 1,20UH10%0,180HMO,620A CHOKE	LD 067.2870	DELEVAN	DROSSEL1025-22	
L160	LD 39,0UH10%3,600HMO,125A CHOKE	LD 067.3053	DELEVAN	DROSSEL1025-58	
L161	LD 39,0UH10%3,600HMO,125A CHOKE	LD 067.3053	DELEVAN	DROSSEL1025-58	
L180	LD 1,20UH10%0,180HMO,620A CHOKE	LD 067.2870	DELEVAN	DROSSEL1025-22	

Kennz. Comp.No.	Benennung Designation	Sachnummer Stock No.	Hersteller Manufacturer	Bezeichnung Designation	enthalten in contained in
L220	LD 150 UH10%15,00HMO,061A CHOKE	LD 067.3124	DELEVAN	DROSSEL1025-72	
L240	LD 1,20UH10%0,180HMO,620A CHOKE	LD 067.2870	DELEVAN	DROSSEL1025-22	
L241	LD 1,20UH10%0,180HMO,620A CHOKE	LD 067.2870	DELEVAN	DROSSEL1025-22	
L280	LD UKW-DR.Z=750 OHM 50MHZ CHOKE	LD 026.4578	VALVO	431202036641	
L281	LD 1,20UH10%0,180HMO,620A CHOKE	LD 067.2870	DELEVAN	DROSSEL1025-22	
L282	LD 1,20UH10%0,180HMO,620A CHOKE	LD 067.2870	DELEVAN	DROSSEL1025-22	
L283	LD 1,20UH10%0,180HMO,620A CHOKE	LD 067.2870	DELEVAN	DROSSEL1025-22	
L284	LD 1,20UH10%0,180HMO,620A CHOKE	LD 067.2870	DELEVAN	DROSSEL1025-22	
N220	BO SE5534AFE LOW N.OPAMP OPERATIONAL AMPLIFIER	BO 301.3335	SIGNETICS	SE5534AFE	
N240	BO LM124J 4XL.P.OPAMP OPERATIONAL AMPLIFIER	300.6353	NSC	LM124J	
R1	RL 0,35W 100 OHM+-1%TK50 METALFILM-RESISTOR	RL 082.6543	DRALORIC	SMA0207/100/HM-F-D	
R2	RL 0,35W 1KOHM+-1%TK50 RESISTOR	RL 082.2160	DRALORIC	SMA0207/1K-F-C	
R3	RL 0,35W 5,62KOHM+-1%TK50 RESISTOR	RL 082.2190	DRALORIC	SMA0207/5,62K-F-C	
R4	RL 0,35W 47,5 OHM+-1%TK50 RESISTOR	RL 082.9507	DRALORIC	SMA0207/47,5OHM-F-D	
R5	RL 0,35W 221 OHM+-1%TK50 RESISTOR TRIMMWERT	RL 083.0084	DRALORIC	SMA0207/221OHM-F-D	
R6	RL 0,35W 10,0 OHM+-1%TK50 RESISTOR	RL 082.8852	DRALORIC	SMA0207/10OHM-F-D	
R7	RL 0,35W 1KOHM+-1%TK50 RESISTOR NUR VAR/ONLY MOD: 03	RL 082.2160	DRALORIC	SMA0207/1K-F-C	
R8	RL 0,35W 1KOHM+-1%TK50 RESISTOR NUR VAR/ONLY MOD: 03	RL 082.2160	DRALORIC	SMA0207/1K-F-C	
R9	RL 0,35W 5,62KOHM+-1%TK50 RESISTOR NUR VAR/ONLY MOD: 03	RL 082.2190	DRALORIC	SMA0207/5,62K-F-C	
R10	RL 0,35W 47,5 OHM+-1%TK50 RESISTOR NUR VAR/ONLY MOD: 03	RL 082.9507	DRALORIC	SMA0207/47,5OHM-F-D	
R11	RL 0,35W 221 OHM+-1%TK50 RESISTOR NUR VAR/ONLY MOD: 03 TRIMMWERT	RL 083.0084	DRALORIC	SMA0207/221OHM-F-D	
R12	RL 0,35W 1,50KOHM+-1%TK50 RESISTOR NUR VAR/ONLY MOD: 03	RL 083.0732	DRALORIC	SMA0207/1,50K-F-D	
R13	RL 0,35W 10,0 OHM+-1%TK50 RESISTOR NUR VAR/ONLY MOD: 03	RL 082.8852	DRALORIC	SMA0207/10OHM-F-D	
R14	RL 0,35W 33,2 OHM+-1%TK50 RESISTOR	RL 082.9359	DRALORIC	SMA0207/33,2OHM-F-D	
R15	RS 0,5W100 OHM+-20%KURVE1 DEPOS.-CARBON POTENTIOMET	RS 069.8081	BOURNS	3329H-1-101	
R16	RL 0,35W5,62 OHM+-1% TK50 METALFILMRESISTOR	RL 099.8044	RESISTA	MK2 5,62 OHM 1% TK50	
R17	RL 0,35W 200 OHM+-1%TK50 RESISTOR	RL 083.0049	DRALORIC	SMA0207/200OHM-F-D	
R18	RL 0-OHM-WIDERST. 0204 0-OHM RESISTOR NUR VAR/ONLY MOD: 02	RL 069.0000	DRALORIC	OMA 0204	
R30	RL 0,35W 182 OHM+-1%TK50 RESISTOR	RL 083.0010	DRALORIC	SMA0207/182OHM-F-D	
R31	RL 0,35W 1,21KOHM+-1%TK50 RESISTOR	RL 083.0655	DRALORIC	SMA0207/1,21K-F-D	
R32	RL 0,35W 267 OHM+-1%TK50 RESISTOR	RL 083.0161	DRALORIC	SMA0207/267OHM-F-D	
R33	RL 0,35W 267 OHM+-1%TK50 RESISTOR	RL 083.0161	DRALORIC	SMA0207/267OHM-F-D	
R34	RG 16,2 OHM+-1%TK100 1206 CHIP RESISTOR	RG 006.8690	DALE	CRCW1206-10 16R2 F-T	

Für diese Unterlage behalten wir uns alle Rechte vor

Kennz. Comp.No.	Benennung Designation	Sachnummer Stock No.	Hersteller Manufacturer	Bezeichnung Designation	enthalten in contained in
R35	RG 16,2 OHM+-1%TK100 1206 CHIP RESISTOR	RG 006.8690	DALE	CRCW1206-10 16R2 F-T	
R40	RL 0,35W 267 OHM+-1%TK50 RESISTOR	RL 083.0161	DRALORIC	SMA0207/267OHM-F-D	
R41	RL 0,35W 1,21KOHM+-1%TK50 RESISTOR	RL 083.0655	DRALORIC	SMA0207/1,21K-F-D	
R42	RL 0,35W 200 OHM+-1%TK50 RESISTOR	RL 083.0049	DRALORIC	SMA0207/200OHM-F-D	
R43	RL 0,35W 357 OHM+-1%TK50 RESISTOR	RL 083.0284	DRALORIC	SMA0207/357OHM-F-D	
R44	RG 12,1 OHM+-1%TK100 1206 CHIP RESISTOR	RG 006.8661	DALE	CRCW1206-10 12R1 F-T	
R50	RG 14,7 OHM+-2%TK200 1206 CHIP RESISTOR	006.8684	DRALORIC	CGB3216 14,7OHM2% TK	
R51	RG 75,0 OHM+-1%TK100 1206 CHIP RESISTOR	RG 006.8855	DALE	CRCW1206-10 75R F-T	
R52	RG 14,7 OHM+-2%TK200 1206 CHIP RESISTOR	006.8684	DRALORIC	CGB3216 14,7OHM2% TK	
R53	RL 0,35W 150 OHM+-1%TK50 RESISTOR	RL 082.9942	DRALORIC	SMA0207/150OHM-F-D	
R54	RL 0,35W 3,57KOHM+-1%TK50 RESISTOR	RL 083.1022	DRALORIC	SMA0207/3,57K-F-D	
R55	RG 464 OHM+-2%TK200 1206 CHIP RESISTOR	006.9045	DRALORIC	CGB3216 464OHM2% TK	
R56	RG 11,0 OHM+-1%TK100 1206 CHIP RESISTOR	RG 006.8655	DALE	CRCW1206-10 11R F-T	
R57	RG 464 OHM+-2%TK200 1206 CHIP RESISTOR	006.9045	DRALORIC	CGB3216 464OHM2% TK	
R58	RL 0,35W 47,5 OHM+-1%TK50 RESISTOR	RL 082.9507	DRALORIC	SMA0207/47,5OHM-F-D	
R60	RG 13,3 OHM+-2%TK200 1206 CHIP RESISTOR	006.8678	DRALORIC	CGB3216 13,3OHM2% TK	
R61	RG 90,9 OHM+-1%TK100 1206 CHIP RESISTOR	RG 006.8878	DALE	CRCW1206-10 90R9 F-T	
R62	RG 13,3 OHM+-2%TK200 1206 CHIP RESISTOR	006.8678	DRALORIC	CGB3216 13,3OHM2% TK	
R63	RL 0,35W 221 OHM+-1%TK50 RESISTOR	RL 083.0084	DRALORIC	SMA0207/221OHM-F-D	
R64	RL 0,35W 200 OHM+-1%TK50 RESISTOR	RL 083.0049	DRALORIC	SMA0207/200OHM-F-D	
R65	RL 0,35W 1,21KOHM+-1%TK50 RESISTOR	RL 083.0655	DRALORIC	SMA0207/1,21K-F-D	
R66	RL 0,35W 357 OHM+-1%TK50 RESISTOR	RL 083.0284	DRALORIC	SMA0207/357OHM-F-D	
R67	RL 0,35W 267 OHM+-1%TK50 RESISTOR	RL 083.0161	DRALORIC	SMA0207/267OHM-F-D	
R68	RG 12,1 OHM+-1%TK100 1206 CHIP RESISTOR	RG 006.8661	DALE	CRCW1206-10 12R1 F-T	
R70	RG 14,7 OHM+-2%TK200 1206 CHIP RESISTOR	006.8684	DRALORIC	CGB3216 14,7OHM2% TK	
R71	RG 75,0 OHM+-1%TK100 1206 CHIP RESISTOR	RG 006.8855	DALE	CRCW1206-10 75R F-T	
R72	RG 14,7 OHM+-2%TK200 1206 CHIP RESISTOR	006.8684	DRALORIC	CGB3216 14,7OHM2% TK	
R73	RL 0,35W 150 OHM+-1%TK50 RESISTOR	RL 082.9942	DRALORIC	SMA0207/150OHM-F-D	
R74	RL 0,35W 3,57KOHM+-1%TK50 RESISTOR	RL 083.1022	DRALORIC	SMA0207/3,57K-F-D	
R75	RL 0,35W 47,5 OHM+-1%TK50 RESISTOR	RL 082.9507	DRALORIC	SMA0207/47,5OHM-F-D	
R80	RG 287 OHM+-2%TK200 1206 CHIP RESISTOR	006.8990	DRALORIC	CGB3216 287OHM2% TK	
R81	RG 17,8 OHM+-2%TK200 1206 CHIP RESISTOR	006.8703	DRALORIC	CGB3216 17,8OHM2% TK	
R82	RG 287 OHM+-2%TK200 1206 CHIP RESISTOR	006.8990	DRALORIC	CGB3216 287OHM2% TK	
R83	RL 0,35W 10,0KOHM+-1%TK50 RESISTOR	RL 083.1297	DRALORIC	SMA0207/10K-F-D	
R84	RL 0,35W 3,32KOHM+-1%TK50 RESISTOR	RL 083.0990	DRALORIC	SMA0207/3,32K-F-D	
R85	RL 0,35W 43,2 OHM+-1%TK50 RESISTOR	RL 082.9465	DRALORIC	SMA0207/43,2OHM-F-D	
R86	RL 0,35W 68,1 OHM+-1%TK50 RESISTOR	RL 082.9636	DRALORIC	SMA0207/68,1OHM-F-D	
R87	RL 0,35W 200 OHM+-1%TK50 RESISTOR	RL 083.0049	DRALORIC	SMA0207/200OHM-F-D	
R88	RL 0,35W 2,74KOHM+-1%TK50 RESISTOR	RL 083.0926	DRALORIC	SMA0207/2,74K-F-D	

Kennz. Comp.No.	Benennung Designation	Sachnummer Stock No.	Hersteller Manufacturer	Bezeichnung Designation	enthalten in contained in
R89	RG 12,1 OHM+-1%TK100 1206 CHIP RESISTOR	RG 006.8661	DALE	CRCW1206-10 12R1 F-T	
R90	RG 422 OHM+-2%TK200 1206 CHIP RESISTOR	006.9039	DRALORIC	CGB3216 422OHM2% TK	
R91	RG 12,1 OHM+-1%TK100 1206 CHIP RESISTOR	RG 006.8661	DALE	CRCW1206-10 12R1 F-T	
R92	RG 422 OHM+-2%TK200 1206 CHIP RESISTOR	006.9039	DRALORIC	CGB3216 422OHM2% TK	
R93	RG 14,7 OHM+-2%TK200 1206 CHIP RESISTOR	006.8684	DRALORIC	CGB3216 14,7OHM2% TK	
R110	RG 21,5 OHM+-2%TK200 1206 CHIP RESISTOR	006.8726	DRALORIC	CGB3216 21,5OHM2% TK	
R111	RG 46,4 OHM+-2%TK200 1206 CHIP RESISTOR	006.8803	DRALORIC	CGB3216 46,4OHM2% TK	
R112	RG 21,5 OHM+-2%TK200 1206 CHIP RESISTOR	006.8726	DRALORIC	CGB3216 21,5OHM2% TK	
R113	RL 0,35W 47,5 OHM+-1%TK50 RESISTOR	RL 082.9507	DRALORIC	SMA0207/47,5OHM-F-D	
R114	RL 0,35W 3,57KOHM+-1%TK50 RESISTOR	RL 083.1022	DRALORIC	SMA0207/3,57K-F-D	
R115	RL 0,35W 150 OHM+-1%TK50 RESISTOR	RL 082.9942	DRALORIC	SMA0207/150OHM-F-D	
R116	RG 21,5 OHM+-2%TK200 1206 CHIP RESISTOR	006.8726	DRALORIC	CGB3216 21,5OHM2% TK	
R117	RG 46,4 OHM+-2%TK200 1206 CHIP RESISTOR	006.8803	DRALORIC	CGB3216 46,4OHM2% TK	
R118	RG 21,5 OHM+-2%TK200 1206 CHIP RESISTOR	006.8726	DRALORIC	CGB3216 21,5OHM2% TK	
R120	RL 0,35W 49,9 OHM+-1%TK50 RESISTOR	RL 082.9520	RESISTA	MK2	
R130	RG 4,75KOHM+-1%TK100 1206 RESISTOR CHIP	RG 007.5820	DALE	CRCW1206-10 4K75 F-T	
R132	RL 0,35W 182 OHM+-1%TK50 RESISTOR	RL 083.0010	DRALORIC	SMA0207/182OHM-F-D	
R133	RG 5,62KOHM+-1%TK100 1206 CHIP RESISTOR	RG 007.0735	DALE	CRCW1206-10 5K62 F-T	
R134	RG 22,1KOHM+-1%TK100 1206 RESISTOR CHIP	RG 007.5872	DALE	CRCW1206-10 22K1 F-T	
R135	RL 0,35W 47,5 OHM+-1%TK50 RESISTOR	RL 082.9507	DRALORIC	SMA0207 47,5OHM-F-D	
R136	RG 47,5 OHM+-1%TK100 1206 RESISTOR CHIP	RG 007.5566	DALE	CRCW1206-10 47R5 F-T	
R150	RL 0,35W 619 OHM+-1%TK50 RESISTOR	RL 083.0478	DRALORIC	SMA0207/619OHM-F-D	
R151	RL 0,35W 90,9 OHM+-1%TK50 RESISTOR	RL 082.9742	DRALORIC	SMA0207/90,9OHM-F-D	
R152	RL 0,35W 61,9 OHM+-1%TK50 RESISTOR	RL 082.9607	DRALORIC	SMA0207/61,9OHM-F-D	
R153	RL 0,35W6,81 OHM+-1%TK50 METALFILMRESISTOR	RL 099.8067	RESISTA	MK2 6,81 OHM 1% TK50	
R154	RL 0,35W 1,50KOHM+-1%TK50 RESISTOR	RL 083.0732	DRALORIC	SMA0207/1,50K-F-D	
R155	RL 0,35W 274 OHM+-1%TK50 RESISTOR	RL 083.0178	DRALORIC	SMA0207/274OHM-F-D	
R156	RL 0,35W 100 OHM+-1%TK50 METALFILM-RESISTOR	RL 082.6543	DRALORIC	SMA0207/100/HM-F-D	
R157	RL 0,35W 200 OHM+-1%TK50 RESISTOR	RL 083.0049	DRALORIC	SMA0207/200OHM-F-D	
R158	RL 0,35W 475 OHM+-1%TK50 RESISTOR	RL 083.0390	DRALORIC	SMA0207/475OHM-F-D	
R159	NUR VAR/ONLY MOD: 02 RL 0-OHM-WIDERST. 0204 0-OHM RESISTOR	RL 069.0000	DRALORIC	OMA 0204	
R160	NUR VAR/ONLY MOD: 03 RL 0,35W 221 OHM+-1%TK50 RESISTOR	RL 083.0084	DRALORIC	SMA0207/221OHM-F-D	
R161	NUR VAR/ONLY MOD: 03 RL 0,35W 1MOHM+-1%TK50 RESISTOR	RL 082.7862	DRALORIC	SMA0207/1M-F-D	
R162	NUR VAR/ONLY MOD: 03 RL 0,35W 221 OHM+-1%TK50 RESISTOR	RL 083.0084	DRALORIC	SMA0207/221OHM-F-D	
R163	NUR VAR/ONLY MOD: 03 RL 0,35W 475 OHM+-1%TK50 RESISTOR	RL 083.0390	DRALORIC	SMA0207/475OHM-F-D	
R164	RL 0,35W 475 OHM+-1%TK50 RESISTOR NUR VAR/ONLY MOD: 03	RL 083.0390	DRALORIC	SMA0207/475OHM-F-D	

Für [illegible] Unterlage behalten wir uns alle Rechte vor

Kennz. Comp.No.	Benennung Designation	Sachnummer Stock No.	Hersteller Manufacturer	Bezeichnung Designation	enthalten in contained in
R165	RL 0,35W 221 OHM+-1%TK50 RESISTOR	RL 083.0084	DRALORIC	SMA0207/221OHM-F-D	
R166	RL 0,35W 221 OHM+-1%TK50 RESISTOR	RL 083.0084	DRALORIC	SMA0207/221OHM-F-D	
R167	RL 0-OHM-WIDERST. 0204 O-OHM RESISTOR NUR VAR/ONLY MOD: 03	RL 069.0000	DRALORIC	OMA 0204	
R168	RL 0-OHM-WIDERST. 0204 O-OHM RESISTOR	RL 069.0000	DRALORIC	OMA 0204	
R169	RL 0,35W 475 OHM+-1%TK50 RESISTOR	RL 083.0390	DRALORIC	SMA0207/475OHM-F-D	
R171	RL 0,35W 1MOHM+-1%TK50 RESISTOR NUR VAR/ONLY MOD: 03	RL 082.7862	DRALORIC	SMA0207/1M-F-D	
R172	RL 0,35W 475 OHM+-1%TK50 RESISTOR	RL 083.0390	DRALORIC	SMA0207/475OHM-F-D	
R173	RL 0-OHM-WIDERST. 0204 O-OHM RESISTOR NUR VAR/ONLY MOD: 03	RL 069.0000	DRALORIC	OMA 0204	
R174	RL 0-OHM-WIDERST. 0204 O-OHM RESISTOR	RL 069.0000	DRALORIC	OMA 0204	
R175	RL 0-OHM-WIDERST. 0204 O-OHM RESISTOR NUR VAR/ONLY MOD: 03	RL 069.0000	DRALORIC	OMA 0204	
R176	RL 0-OHM-WIDERST. 0204 O-OHM RESISTOR	RL 069.0000	DRALORIC	OMA 0204	
R179	RL 0,35W 10,0 OHM+-1%TK50 RESISTOR	RL 082.8852	DRALORIC	SMA0207/10OHM-F-D	
R180	RL 0,35W 1KOHM+-1%TK50 RESISTOR	RL 082.2160	DRALORIC	SMA0207/1K-F-C	
R181	RL 0,35W 1KOHM+-1%TK50 RESISTOR	RL 082.2160	DRALORIC	SMA0207/1K-F-C	
R182	RL 0,35W 100 OHM+-1%TK50 METALFILM-RESISTOR	RL 082.6543	DRALORIC	SMA0207/100/HM-F-D	
R183	RL 0,35W 1,50KOHM+-1%TK50 RESISTOR	RL 083.0732	DRALORIC	SMA0207/1,50K-F-D	
R184	RL 0,35W 274 OHM+-1%TK50 RESISTOR	RL 083.0178	DRALORIC	SMA0207/274OHM-F-D	
R185	RL 0,35W 100 OHM+-1%TK50 METALFILM-RESISTOR	RL 082.6543	DRALORIC	SMA0207/100/HM-F-D	
R186	RL 0,35W 1,50KOHM+-1%TK50 RESISTOR	RL 083.0732	DRALORIC	SMA0207/1,50K-F-D	
R187	RL 0,35W 47,5 OHM+-1%TK50 RESISTOR	RL 082.9507	DRALORIC	SMA0207/47,50HM-F-D	
R188	RL 0,35W 274 OHM+-1%TK50 RESISTOR	RL 083.0178	DRALORIC	SMA0207/274OHM-F-D	
R189	RL 0,35W 100 OHM+-1%TK50 METALFILM-RESISTOR	RL 082.6543	DRALORIC	SMA0207/100/HM-F-D	
R190	RL 0,35W 1,50KOHM+-1%TK50 RESISTOR	RL 083.0732	DRALORIC	SMA0207/1,50K-F-D	
R191	RL 0,35W 274 OHM+-1%TK50 RESISTOR	RL 083.0178	DRALORIC	SMA0207/274OHM-F-D	
R192	RL 0,35W11,00 OHM+-1%TK50 RESISTOR	RL 082.8898	DRALORIC	SMA0207/11OHM-F-D	
R193	RL 0,35W 110 OHM+-1%TK50 RESISTOR	RL 082.9813	DRALORIC	SMA0207/110OHM-F-D	
R194	RL 0,35W11,00 OHM+-1%TK50 RESISTOR	RL 082.8898	DRALORIC	SMA0207/11OHM-F-D	
R195	RL 0,35W 47,5 OHM+-1%TK50 RESISTOR	RL 082.9507	DRALORIC	SMA0207/47,50HM-F-D	
R196	RL 0,35W 162 OHM+-1%TK50 RESISTOR	RL 082.9971	DRALORIC	SMA0207/162OHM-F-D	
R197	RL 0,35W 261 OHM+-1%TK50 RESISTOR	RL 083.0155	DRALORIC	SMA0207/261OHM-F-D	
R198	RL 0,35W 243 OHM+-1%TK50 DEPOS.-CARBON RESISTOR	RL 083.0126	DRALORIC	SMA0207/243OHM-F-D	
R199	RL 0,35W 82,5 OHM+-1%TK50 RESISTOR	RL 082.9707	DRALORIC	SMA0207/82,50HM-F-D	
R204	RL 0,35W22,10 OHM+-1%TK50 RESISTOR	RL 082.9188	DRALORIC	SMA0207/22,10HM-F-D	
R205	RL 0,35W 121 OHM+-1%TK50 RESISTOR	RL 082.9859	DRALORIC	SMA0207/121OHM-F-D	
R206	RL 0,35W 681 OHM+-1%TK50 RESISTOR	RL 083.0490	DRALORIC	SMA0207/681OHM-F-D	
R207	RL 0,35W 162 OHM+-1%TK50 RESISTOR	RL 082.9971	DRALORIC	SMA0207/162OHM-F-D	
R208	RL 0,35W 261 OHM+-1%TK50 RESISTOR	RL 083.0155	DRALORIC	SMA0207/261OHM-F-D	

Kennz. Comp.No.	Benennung Designation	Sachnummer Stock No.	Hersteller Manufacturer	Bezeichnung Designation	enthalten in contained in
R209	RL 0,35W 162 OHM+-1%TK50 RESISTOR	RL 082.9971	DRALORIC	SMA0207/162OHM-F-D	
R210	RL 0,35W 261 OHM+-1%TK50 RESISTOR	RL 083.0155	DRALORIC	SMA0207/261OHM-F-D	
R211	RL 0,35W 1KOHM+-1%TK50 RESISTOR	RL 082.2160	DRALORIC	SMA0207/1K-F-C	
R212	RL 0,35W 475 OHM+-1%TK50 RESISTOR	RL 083.0390	DRALORIC	SMA0207/475OHM-F-D	
R213	RL 0,35W 1KOHM+-1%TK50 RESISTOR	RL 082.2160	DRALORIC	SMA0207/1K-F-C	
R214	RL 0,35W 1KOHM+-1%TK50 RESISTOR	RL 082.2160	DRALORIC	SMA0207/1K-F-C	
R219	RL 0,35W 511 OHM+-1%TK50 RESISTOR	RL 083.0426	DRALORIC	SMA0207/511OHM-F-D	
R220	RL 0,35W 332 OHM+-1%TK50 RESISTOR	RL 083.0255	DRALORIC	SMA0207/332OHM-F-D	
R221	RL 0,35W 332 OHM+-1%TK50 RESISTOR	RL 083.0255	DRALORIC	SMA0207/332OHM-F-D	
R222	RL 0,35W 47,5 OHM+-1%TK50 RESISTOR	RL 082.9507	DRALORIC	SMA0207/47,5OHM-F-D	
R223	RL 0,35W 47,5 OHM+-1%TK50 RESISTOR	RL 082.9507	DRALORIC	SMA0207/47,5OHM-F-D	
R224	RL 0,35W 332 OHM+-1%TK50 RESISTOR	RL 083.0255	DRALORIC	SMA0207/332OHM-F-D	
R225	RL 0,35W 10,0KOHM+-1%TK50 RESISTOR	RL 083.1297	DRALORIC	SMA0207/10K-F-D	
R226	RL 0,35W 33,2KOHM+-1%TK50 RESISTOR	RL 083.1674	DRALORIC	SMA0207/33,2K-F-C	
R227	RL 0,35W 10,0KOHM+-1%TK50 RESISTOR	RL 083.1297	DRALORIC	SMA0207/10K-F-D	
R228	RL 0,35W 10,0KOHM+-1%TK50 RESISTOR	RL 083.1297	DRALORIC	SMA0207/10K-F-D	
R238	RL 0,35W 82,5KOHM+-1%TK50 RESISTOR	RL 082.2302	DRALORIC	SMA0207/82,5K-F-C	
R239	RL 0,35W 1KOHM+-1%TK50 RESISTOR	RL 082.2160	DRALORIC	SMA0207/1K-F-C	
R240	RL 0,35W 221 OHM+-1%TK50 RESISTOR NUR VAR/ONLY MOD: 03	RL 083.0084	DRALORIC	SMA0207/221OHM-F-D	
R241	RL 0,35W 4,75KOHM+-1%TK50 RESISTOR	RL 083.1097	DRALORIC	SMA0207/4,75K-F-D	
R242	RL 0,35W 47,5 OHM+-1%TK50 RESISTOR	RL 082.9507	DRALORIC	SMA0207/47,5OHM-F-D	
R243	RL 0,35W 1KOHM+-1%TK50 RESISTOR	RL 082.2160	DRALORIC	SMA0207/1K-F-C	
R244	RL 0,35W 10,0KOHM+-1%TK50 RESISTOR	RL 083.1297	DRALORIC	SMA0207/10K-F-D	
R247	RL 0,35W 22,1KOHM+-1%TK50 RESISTOR	RL 083.1545	DRALORIC	SMA/207/22,1K-F-C	
R248	RL 0,35W 10,0KOHM+-1%TK50 RESISTOR	RL 083.1297	DRALORIC	SMA0207/10k-F-D	
R250	RL 0,35W 2,00KOHM+-1%TK50 RESISTOR	RL 083.0826	DRALORIC	SMA0207/2,00K-F-D	
R251	RL 0,35W 4,75KOHM+-1%TK50 RESISTOR	RL 083.1097	DRALORIC	SMA0207/4,75K-F-D	
R252	RL 0,35W 562 OHM+-1%TK50 RESISTOR	RL 083.0461	DRALORIC	SMA0207/562OHM-F-D	
R253	RL 0,35W 9,09KOHM+-1%TK50 RESISTOR	RL 082.2177	DRALORIC	SMA0207/9,09K-F-C	
R254	RL 0,35W 4,75KOHM+-1%TK50 RESISTOR	RL 083.1097	DRALORIC	SMA0207/4,75K-F-D	
R255	RL 0,35W 1KOHM+-1%TK50 RESISTOR	RL 082.2160	DRALORIC	SMA0207/1K-F-C	
R256	RL 0,35W 1KOHM+-1%TK50 RESISTOR	RL 082.2160	DRALORIC	SMA0207/1K-F-C	
R278	RL 0,35W 10,0KOHM+-1%TK50 RESISTOR	RL 083.1297	DRALORIC	SMA0207/10K-F-D	
R279	RL 0,35W 3,32KOHM+-1%TK50 RESISTOR	RL 083.0990	DRALORIC	SMA0207/3,32K-F-D	
R280	RL 0,35W 1KOHM+-1%TK50 RESISTOR	RL 082.2160	DRALORIC	SMA0207/1K-F-C	
R281	RL 0,35W 1KOHM+-1%TK50 RESISTOR	RL 082.2160	DRALORIC	SMA0207/1K-F-C	
R282	RL 0,35W 1KOHM+-1%TK50 RESISTOR	RL 082.2160	DRALORIC	SMA0207/1K-F-C	
R283	RL 0,35W 10,0 OHM+-1%TK50 RESISTOR	RL 082.8852	DRALORIC	SMA0207/10OHM-F-D	

Für diese Unterlage behalten wir uns alle Rechte vor

Kennz. Comp.No.	Benennung Designation	Sachnummer Stock No.	Hersteller Manufacturer	Bezeichnung Designation	enthalten in contained in
R287	RL 0,35W 1,50KOHM+-1%TK50 RESISTOR	RL 083.0732	DRALORIC	SMA0207/1,50K-F-D	
R288	RL 0,35W 332 OHM+-1%TK50 RESISTOR	RL 083.0255	DRALORIC	SMA0207/332OHM-F-D	
R289	RL 0,35W 332 OHM+-1%TK50 RESISTOR	RL 083.0255	DRALORIC	SMA0207/332OHM-F-D	
R290	RL 0,35W 100 OHM+-1%TK50 METALFILM-RESISTOR	RL 082.6543	DRALORIC	SMA0207/100/HM-F-D	
R291	RL 0,35W 100 OHM+-1%TK50 METALFILM-RESISTOR	RL 082.6543	DRALORIC	SMA0207/100/HM-F-D	
R292	RL 0,35W 100 OHM+-1%TK50 METALFILM-RESISTOR	RL 082.6543	DRALORIC	SMA0207/100/HM-F-D	
R293	RL 0,35W 332 OHM+-1%TK50 RESISTOR	RL 083.0255	DRALORIC	SMA0207/332OHM-F-D	
R294	RL 0,35W 332 OHM+-1%TK50 RESISTOR	RL 083.0255	DRALORIC	SMA0207/332OHM-F-D	
R298	RL 0,35W 475 OHM+-1%TK50 RESISTOR	RL 083.0390	DRALORIC	SMA0207/475OHM-F-D	
R299	RL 0,35W 475 OHM+-1%TK50 RESISTOR	RL 083.0390	DRALORIC	SMA0207/475OHM-F-D	
T60	LU UEBERTRAGER TRANSFORMER	807.4067			
T130	LU UEBERTRAGER TRANSFORMER	808.0113			
U120	BM TAK1H MIXER 0.5GHZ MIXER	BM 568.2284	MCL	TAK1H	
V1	AK BCY79IX P 45V 200MA TRANSISTOR	AK 010.3777	VALVO	BCY79IX	
V2	AM U310 N-D 25V JFET FET	AM 454.6217	SILICONIX	U310	
V3 ..10	AE BB809 26/ 6PF CDI TUNING DIODE	AE 092.9616	VALVO	BB809	
V11	AE BA244 BER.SCH.DI.UHF DIODE NUR VAR/ONLY MOD: 03	AE 439.6310	INTERMETAL	BA244	
V12	AE BA244 BER.SCH.DI.UHF DIODE NUR VAR/ONLY MOD: 03	AE 439.6310	INTERMETAL	BA244	
V13	AK BCY79IX P 45V 200MA TRANSISTOR NUR VAR/ONLY MOD: 03	AK 010.3777	VALVO	BCY79IX	
V14	AM U310 N-D 25V JFET FET NUR VAR/ONLY MOD: 03	AM 454.6217	SILICONIX	U310	
V15 ..22	AE BB809 26/ 6PF CDI TUNING DIODE NUR VAR/ONLY MOD: 03	AE 092.9616	VALVO	BB809	
V25 ..28	AD 1N4448 75V 0A15 UDI DIODE	AD 012.0700	TEXAS INST	1N4448 GEGURTET	
V30	AK BFR91 N 15V 35MA TRANSISTOR	AK 210.6049	VALVO	BFR91	
V40	AK BFR91 N 15V 35MA TRANSISTOR	AK 210.6049	VALVO	BFR91	
V50	AM U310 N-D 25V JFET FET	AM 454.6217	SILICONIX	U310	
V60	AK BFR91 N 15V 35MA TRANSISTOR	AK 210.6049	VALVO	BFR91	
V70	AM U310 N-D 25V JFET FET	AM 454.6217	SILICONIX	U310	
V80	AK BCY79IX P 45V 200MA TRANSISTOR	AK 010.3777	VALVO	BCY79IX	
V81	AK BFR96 N 15V 75MA TRANSISTOR	AK 093.2738	VALVO	BFR96	
V110	AM U310 N-D 25V JFET FET	AM 454.6217	SILICONIX	U310	
V130	AK BC560B P 45V 100MA TRANSISTOR	AK 007.2044	SIEMENS	BC560B GURT,POL.CBE	
V131	AK NE85632 N 12V 100MA TRANSISTOR	354.6839	NEC	NE85632	
V140	AL BDX77 N 80V 8A0 TRANSISTOR	AL 300.6318	VALVO	BDX77	
V150	AK 2N2369A N 15V 200MA TRANSISTOR	AK 010.4680	VALVO	2N2369A	

Kennz. Comp.No.	Benennung Designation	Sachnummer Stock No.	Hersteller Manufacturer	Bezeichnung Designation	enthalten in contained in
V151	AK BFR96 N 15V 75MA TRANSISTOR	AK 093.2738	VALVO	BFR96	
V152	AE 5082-2800 SCHOTTKY DIODE	AE 012.9066	HEWLETT-P.	5082-2800	
V160	AM J111A N-D 35V JFET FET NUR VAR/ONLY MOD: 03	AM 214.7685	SILICONIX	J111A	
V161	AM J111A N-D 35V JFET FET NUR VAR/ONLY MOD: 03	AM 214.7685	SILICONIX	J111A	
V180	AK BFR96 N 15V 75MA TRANSISTOR	AK 093.2738	VALVO	BFR96	
V181	AE 5082-2800 SCHOTTKY DIODE	AE 012.9066	HEWLETT-P.	5082-2800	
V182	AK BFR96 N 15V 75MA TRANSISTOR	AK 093.2738	VALVO	BFR96	
V183	AE 5082-2800 SCHOTTKY DIODE	AE 012.9066	HEWLETT-P.	5082-2800	
V184	AE 5082-2800 SCHOTTKY DIODE	AE 012.9066	HEWLETT-P.	5082-2800	
V185	AK BFR96 N 15V 75MA TRANSISTOR	AK 093.2738	VALVO	BFR96	
V186	AE 5082-2800 SCHOTTKY DIODE	AE 012.9066	HEWLETT-P.	5082-2800	
V187	AK BFQ24 P 12V 35MA TRANSISTOR	252.2635	VALVO	BFQ24	
V188	AD 1N4448 75V 0A15 UDI DIODE	AD 012.0700	TEXAS INST	1N4448 GEGURTET	
V220	AE BZX79/C12 0,5W ZDI ZENER DIODE	AE 012.2532	VALVO	BZX55/C12 BZX79	
X5	FJ EINBAUWINKELST. SMC ANGLE CONNECTOR	FJ 249.9684	RADIALL	R 112 669	
X6	FJ EINBAUWINKELST. SMC ANGLE CONNECTOR	FJ 249.9684	RADIALL	R 112 669	
X8	FJ EINBAUWINKELST. SMC ANGLE CONNECTOR	FJ 249.9684	RADIALL	R 112 669	
X20	FP INDIREKT.STECKERL.36P. PIN CONNECTOR 2-POLIG/2 PINS	FP 242.3600	BINDER	742-5-11-0178-00-36	
X21	FP IND.STECKERLEISTE 64 P MALE MULTIPOINT CONNECTOR	FP 273.0490	PANDUIT	100-964-033/999	
X30	FP INDIREKT.STECKERL.36P. PIN CONNECTOR 4-POLIG/4 PINS	FP 242.3600	BINDER	742-5-11-0178-00-36	
X31	FP KURZSCHLUSSBUCHSE SHORTING PLUG	FP 491.7042	PK	452-70302	
X40	FP INDIREKT.STECKERL.36P. PIN CONNECTOR 1-POLIG/1 PIN	FP 242.3600	BINDER	742-5-11-0178-00-36	
X41	FP INDIREKT.STECKERL.36P. PIN CONNECTOR 4-POLIG/4 PINS	FP 242.3600	BINDER	742-5-11-0178-00-36	
X42	FP KURZSCHLUSSBUCHSE SHORTING PLUG	FP 491.7042	PK	452-70302	
X60	FP INDIREKT.STECKERL.36P. PIN CONNECTOR 4-POLIG/4 PINS	FP 242.3600	BINDER	742-5-11-0178-00-36	
X61	FP KURZSCHLUSSBUCHSE SHORTING PLUG	FP 491.7042	PK	452-70302	
X62	FP INDIREKT.STECKERL.36P. PIN CONNECTOR 1-POLIG/1 PIN	FP 242.3600	BINDER	742-5-11-0178-00-36	
X70	FP INDIREKT.STECKERL.36P. PIN CONNECTOR 4-POLIG/4 PINS	FP 242.3600	BINDER	742-5-11-0178-00-36	
X71	FP KURZSCHLUSSBUCHSE SHORTING PLUG	FP 491.7042	PK	452-70302	
X80	FP INDIREKT.STECKERL.36P. PIN CONNECTOR 1-POLIG/1 PIN	FP 242.3600	BINDER	742-5-11-0178-00-36	
X81	FP INDIREKT.STECKERL.36P. PIN CONNECTOR 4-POLIG/4 PINS	FP 242.3600	BINDER	742-5-11-0178-00-36	
X82	FP KURZSCHLUSSBUCHSE SHORTING PLUG	FP 491.7042	PK	452-70302	
X120	FP INDIREKT.STECKERL.36P. PIN CONNECTOR	FP 242.3600	BINDER	742-5-11-0178-00-36	

Für diese Unterlage behalten wir uns alle Rechte vor

Kennz. Comp.No.	Benennung Designation	Sachnummer Stock No.	Hersteller Manufacturer	Bezeichnung Designation	enthalten in contained in
	4-POLIG/4 PINS				
X121	FP KURZSCHLUSSBUCHSE SHORTING PLUG	FP 491.7042	PK	452-70302	
X130	FP INDIREKT.STECKERL.36P. PIN CONNECTOR 1-POLIG/1 PIN	FP 242.3600	BINDER	742-5-11-0178-00-36	
X131	FP INDIREKT.STECKERL.36P. PIN CONNECTOR 4-POLIG/4 PINS	FP 242.3600	BINDER	742-5-11-0178-00-36	
X132	FP KURZSCHLUSSBUCHSE SHORTING PLUG	FP 491.7042	PK	452-70302	
X150	FP INDIREKT.STECKERL.36P. PIN CONNECTOR 1-POLIG/1 PIN	FP 242.3600	BINDER	742-5-11-0178-00-36	
X160	FP INDIREKT.STECKERL.36P. PIN CONNECTOR NUR VAR/ONLY MOD: 03 2-POLIG/2 PINS	FP 242.3600	BINDER	742-5-11-0178-00-36	
X161	FP KURZSCHLUSSBUCHSE SHORTING PLUG NUR VAR/ONLY MOD: 03	FP 491.7042	PK	452-70302	
X162	FP INDIREKT.STECKERL.36P. PIN CONNECTOR NUR VAR/ONLY MOD: 03 2-POLIG/2 PINS	FP 242.3600	BINDER	742-5-11-0178-00-36	
X163	FP KURZSCHLUSSBUCHSE SHORTING PLUG NUR VAR/ONLY MOD: 03	FP 491.7042	PK	452-70302	
X180	FP INDIREKT.STECKERL.36P. PIN CONNECTOR 2-POLIG/2 PINS	FP 242.3600	BINDER	742-5-11-0178-00-36	
X181	FP KURZSCHLUSSBUCHSE SHORTING PLUG	FP 491.7042	PK	452-70302	
X182	FP INDIREKT.STECKERL.36P. PIN CONNECTOR 1-POLIG/1 PIN	FP 242.3600	BINDER	742-5-11-0178-00-36	
X183	FP INDIREKT.STECKERL.36P. PIN CONNECTOR 1-POLIG/1 PIN	FP 242.3600	BINDER	742-5-11-0178-00-36	
X220	FP INDIREKT.STECKERL.36P. PIN CONNECTOR 2-POLIG/2 PINS	FP 242.3600	BINDER	742-5-11-0178-00-36	
X221	FP KURZSCHLUSSBUCHSE SHORTING PLUG	FP 491.7042	PK	452-70302	
					- ENDE -

ZF-VERSTÄRKER II

MISCHER

N-TEILER

FANGANZEIGE

ANSTEUERUNG

VERKLEINERUNG

VAR 02 = FSB-AUSFÜHRUNG

ROHDE & SCHWARZ

A			06.88	Gn	IKEF	tag	Name
B	37 074 (29)		12.88	Gn	Bearb	04.88	GN

Benennung: N-SYNTHESIZER

FSB

849. 1014 S

848 0020 V

ersetzt 848 1004

V1 BCY 79 IX OSZ. I 203,5....211,5MHz

V2 U310

V40 BFR 91

AUSGANGSVERSTARKER I

V50 U310

V60 BFR 91

V70 U310

LO-VERST I

LO-VERST. II

V30 BFR 91 OSZ-VERST

PHASENDETECTOR

INTEGRATOR

N220 SES534AFE

N240C LM 124

D265A D265B D265C 74 HC 10

D266 74 HC 123

D267 74 HC 123

D269B 74 AC 74

* LD 826.4578

205 -225MHz
X8 1 2,3,4,5

V1 BCY 79 IX OSZ. I 205-214,5MHz

V2 U310

V13 BCY 79 IX OSZ II 214,5-225MHz

V14 U310

V50 U310

V40 BFR 91

AUSGANGSVERSTÄRKER

V60 BFR 91

V70 U310

LO-VERST I

V80 BCY 79 IX

V81 BFR 96

LO-VERST II

V30

V160 J111A

V161 J111A

PHASENDETECTOR

N220

INTEGRATOR

N240C

D265C

D265A

D265B

D266 74 HC 123

D267

D269B 74 AC 74

* LD 026 4578

200MHz
X6
2,3,4,5

ZF-VERSTÄRKER II

MISCHER

FANGANZEIGE

ANSTEUERUNG

VAR 03 = FSA-AUSFÜHRUNG

0 1 2 3
ZENTIMETER

ROHDE & SCHWARZ	B	37 062(30)	12.88	Gn				1KEF	04.88	GN	N-SYNTHESIZER
											FSB

849. 1014 S		2
848. 0020 V	848. 1004	2

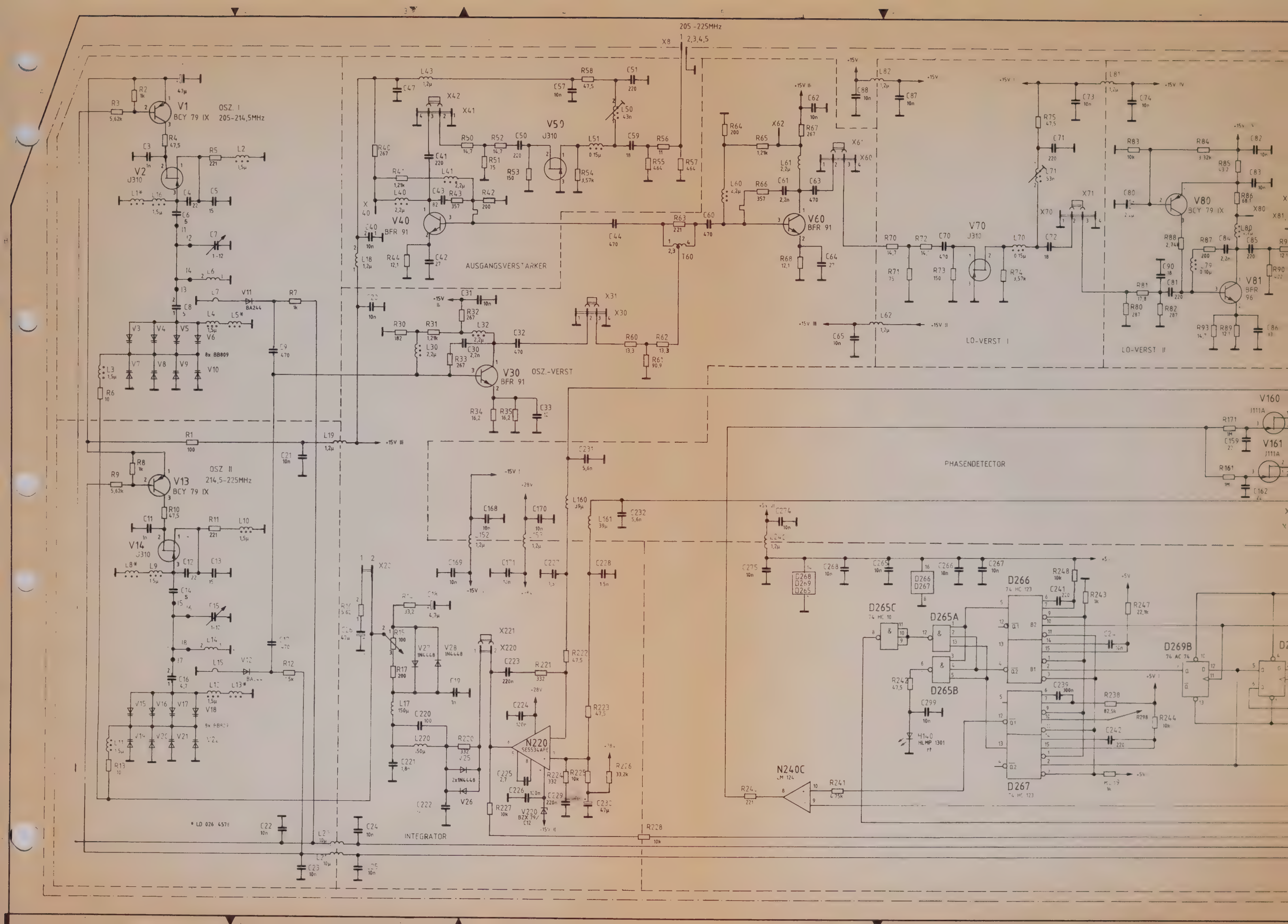

205-225MHz
OSZ. I
205-214,5MHz
V1
BCY 79 IX
V2
J310
V50
J310
V40
BFR 91
AUSGANGSVERSTÄRKER
V60
BFR 91
V70
J310
V80
BCY 79 IX
V81
BFR 96
LO-VERST I
LO-VERST II
V30
BFR 91
OSZ.-VERST
OSZ II
214,5-225MHz
V13
BCY 79 IX
V14
J310
PHASENDETECTOR
V160
J111A
V161
J111A
D266
74 HC 123
D265C
74 HC 10
D265A
D265B
D267
74 HC 123
D269B
74 AC 74
N240C
LM 124
N220
SE5534AFE
V220
BZX 79/C12
INTEGRATOR
* LD 026 4578

Für diese Unterlage behalten
wir uns alle Rechte vor

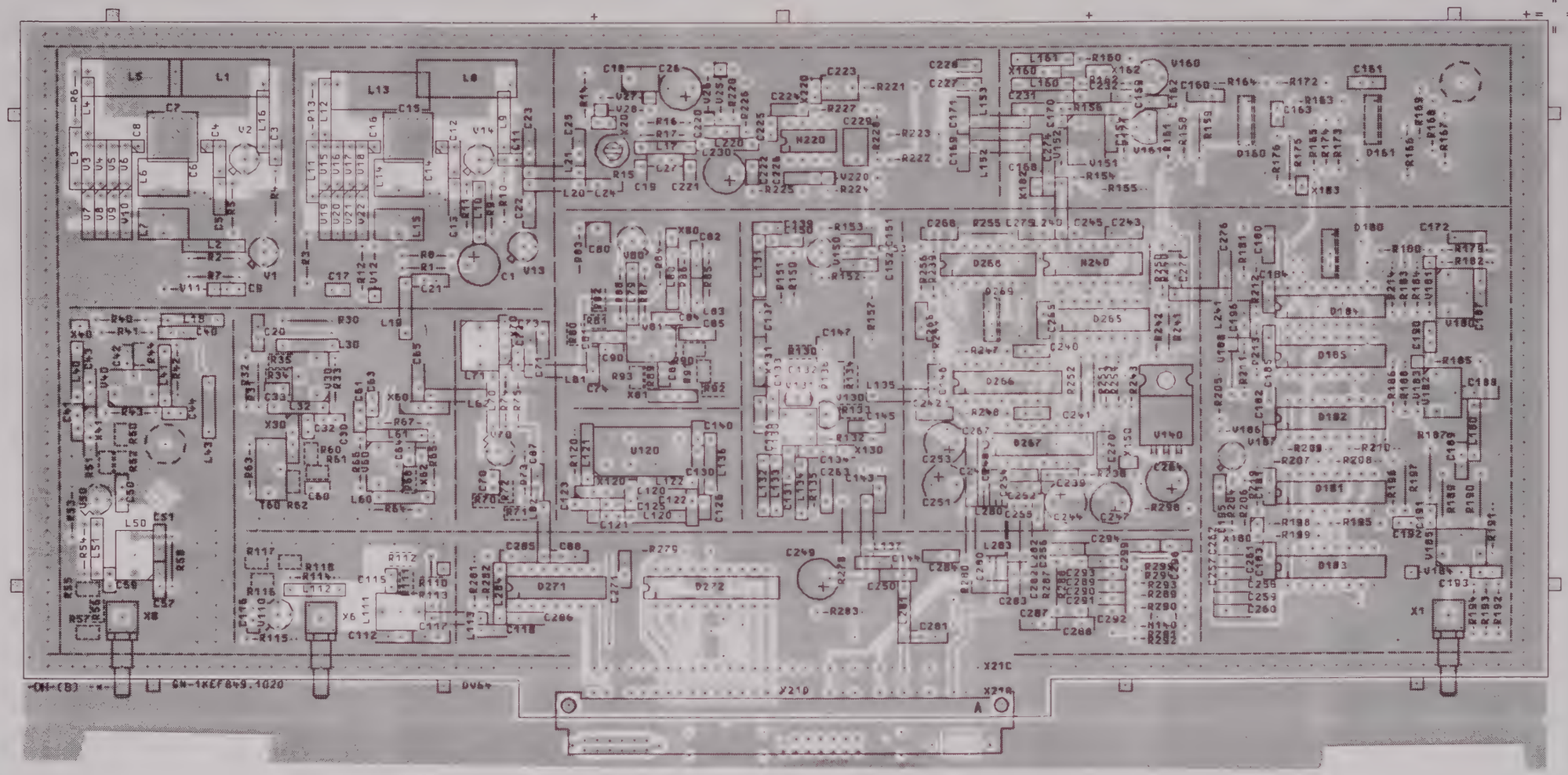

Ansicht und Leitungsführung Bauteilseite
View of tracks on component side

VARIANTENERKLAERUNG / VERSION
VAR02 - FSB-AUSFUEHRUNG / BASIC MODEL
VAR03 = FSA-AUSFUEHRUNG / BASIC MODEL

ACHTUNG EGB!
Elektrostatisch gefährdete Bauelemente erfordern eine besondere Handhabung
ATTENTION ESD!
Electrostatic sensitive devices require a special handling

	Maße ohne Toleranzangabe		Maßstab 1 : 1	
			Holzzeug. Werkstoff	
	1KEF	Tag Name	Benennung	
	Bearb	04.88 GN	N-SYNTHESIZER	Z
	Gepr			
	Norm			
And Zust Anderungs Mitteilung Tag Name	ROHDE&SCHWARZ		Zeichn-Nr 849.1014.01 EE	Blatt-Nr 3
	zu Gerat FSB		reg i V 848.0020V erste Z	

Für diese Unterlage behalten
wir alle Rechte vor

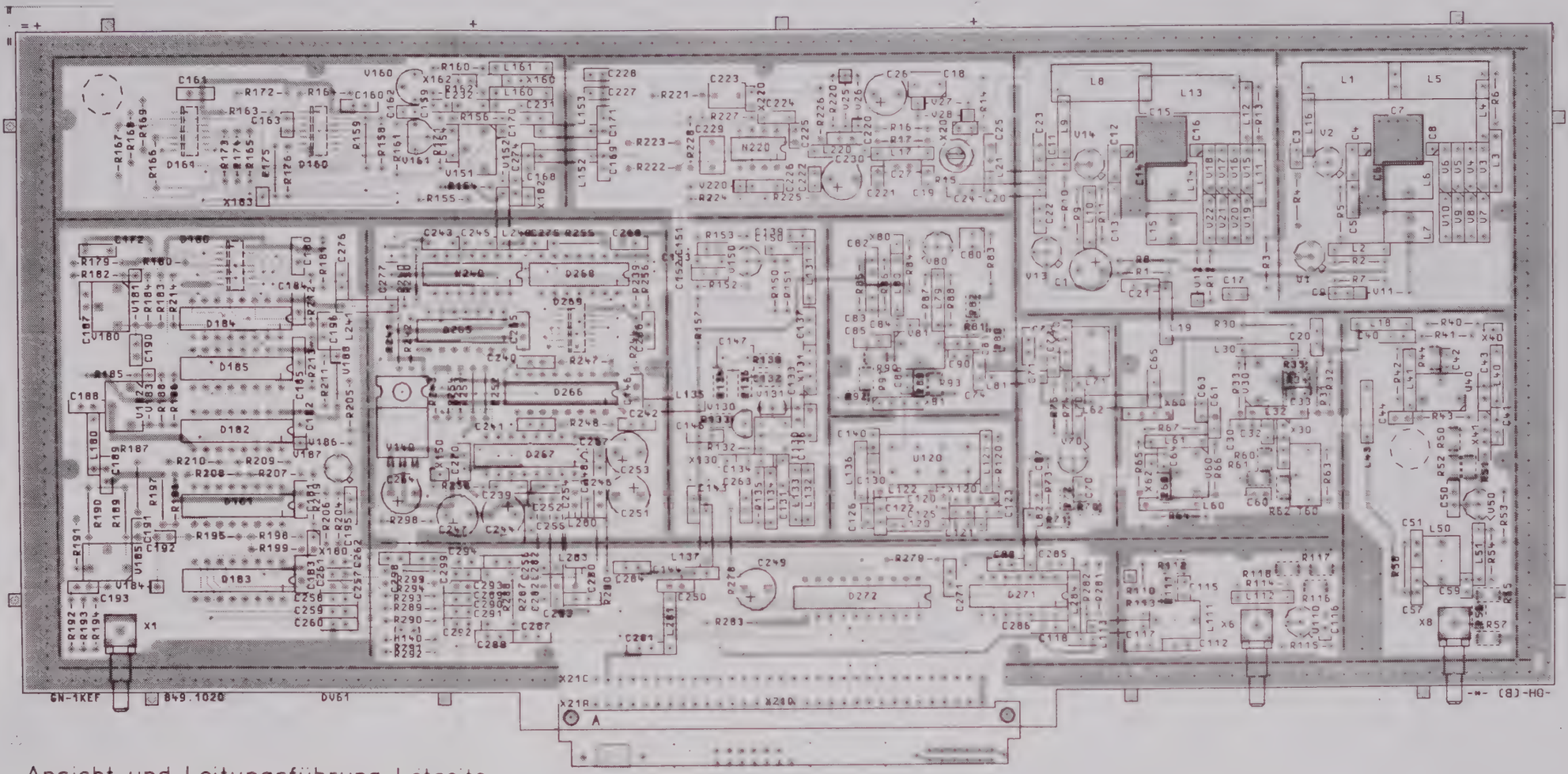

Ansicht und Leitungsführung Lötseite
View of tracks on solder side

VARIANTENERKLAERUNG / VERSION
VAR02 = FSB-AUSFUEHRUNG / BASIC MODEL
VAR03 = FSA-AUSFUEHRUNG / BASIC MODEL

ACHTUNG: EGB!
Elektrostatisch gefährdete Bauelemente erfordern eine besondere Handhabung
ATTENTION ESD!
Electrostatic sensitive devices require a special handling

Thereza HVC 250

	Maße ohne Toleranzangabe	Maßstab 1 : 1	
		Halbzeug, Werkstoff	
	1KEF Tag Name	Benennung	
	Bearb 04.88 GN	N-SYNTHESIZER	Z
	Gepr		
	Norm		
	ROHDE & SCHWARZ	Zeichn.-Nr 849.1014.01 EE	Blatt-Nr 4
And. Zust. Anderungs-Mitteilung Tag Name	zu Gerat FSB	reg. Nr 848.0020V erste Z	v Bl

ROHDE&SCHWARZ

SERVICE DOCUMENTATION

Summing Loop

807.4015.02

Contents

		Page
6	**Service Instructions Summing Loop**	6 1
6.1	**Function Description**	6 1
6.1.1	Detailed Description	6 1
6.1.2	Parallel Interface	6 3
6.2	**Testing and Adjustment**	6 7
6.2.1	Oscillator Level	6 7
6.2.2	Oscillator Frequencies	6 7
6.2.3	Testing the RF Amplifier, Testing the Oscillator Frequency Ranges	6 7
6.2.4	Final Test	6 9
6.3	**Troubleshooting**	6 10

Parts lists
Circuit diagrams
Component location plans

6 Service Instructions Summing Loop

(See circuit diagram 807.4015 S)

6.1 Function Description

The summing loop module is used to improve the S/N ratio and nonharmonic suppression (resulting from the principle used) of the sweep synthesizer module if required.

The output signal of the sweep synthesizer of 10 to 20 MHz is therefore divided down by 1:8 in the multi-loop sweep mode, i.e. to 1.25 to 2.5 MHz. Together with the 1.25-MHz step oscillator, which is used to down-convert the summing oscillator, the latter is synchronized to this signal.

The 1.25-MHz step oscillator - as the name already implies - can be adjusted in steps of 1.25 MHz from 38.75 to 77.5 MHz. It is thus possible to convert the summing oscillator in the frequency range 40 to 80 MHz to an intermediate frequency of 1.25 to 2.5 MHz. The frequency of the 1.25-MHz step oscillator is always below the summing oscillator frequency. The correction signal for the summing oscillator is obtained on the phase detector by comparison with the sweep synthesizer frequency divided by 8. The tuning voltage of the 1.25-MHz step oscillator and that of the sweep synthesizer are used as additional voltages. By continuously varying the sweep synthesizer frequency from 10 to 20 MHz, is is then possible to continuously vary the summing oscillator frequency by 1.25 MHz which corresponds to a change in the output frequency of the summing synthesizer of 1.25 MHz/4 = 312.5 kHz. By switching over the 1.25-MHz step oscillator, it is possible to string together such 312.5-kHz intervals.

The summing oscillator signal divided by a factor of 4 is the output signal of the summing synthesizer in the frequency range 10 to 20 MHz again. The phase noise and nonharmonic suppression of the sweep synthesizer are then improved by a factor of 8 x 4 = 32 corresponding to 30.1 dB. The smallest step of the sweep synthesizer is also reduced from 0.1 Hz by a factor of 1/32.

In single-loop sweep mode, the signal of the sweep synthesizer is directly applied to the output of the summing loop module; the summing oscillator and the 1.25-MHz step oscillator are switched off in this case.

6.1.1 Detailed Description

The 1.25-MHz step oscillator and the summing oscillator are of identical design to obtain the best possible synchronism.

L600 and L500 are used to adjust the oscillators such that the frequency of the 1.25-MHz step oscillator is 1.25 MHz below the frequency of the summing oscillator with the same tuning voltage.

The oscillators have a field effect transistor as the active element and are designed using a Hartley circuit.

The oscillation level of the oscillators can be adjusted by changing a DC voltage using R309 and R7 and limitation by the diodes V308 and V9

The oscillators can be switched on and off using transistors V311 and V12 (on for multi-loop sweep mode, off for single-loop sweep mode).

Each oscillator signal is coupled out by a source follower stage (V310, V11).

1.25-MHz step oscillator PLL

The oscillator signal is divided by the power divider T320.

The amplifier IC N300 provides the RF signal for the mixer N40; the limiting amplifiers N310A,B control the frequency divider.

The frequency divider is designed as a fractional divider. It can be programmed in 1/8 steps from 3.875 to 7.75 which, together with the reference frequency of 10 MHz ($f_{ref}/8$) results in the 1.25-MHz frequency steps of the 1.25-MHz step oscillator.

The integral divider settings (3, 4, 5, 6, 7) are set via the programming inputs P0, P1, P2 of the ECL frequency divider component D340, and the additional fractional divider factors (1/2, 1/4, 1/8) via the inputs A1, A2, A3 of the 4-bit binary adder D347 (see Table 6-1 for setting code).

The output signal from the frequency divider (D340/4) is delayed by one VCO period each time the adder overflows. It is thus possible to change the total divider factor in steps of 1/8. (The LSB A0 is hard-wired to logical "0".)

The divider output signal converted to TTL level is again synchronized to the VCO signal by the D flip-flop D345 and compared in phase detector I (D370A, B, D371A) with the 10-MHz reference frequency.

The pulse output signals of the phase detector are integrated in the following differential integrator into the oscillator tuning voltage. The lowpass with L380, L381 with poles at 1.25 and 2.5 MHz is used to suppress the secondary lines of $n * f_{ref}$ generated by the fractional divider, where $n = 1, 2, 3, \ldots$. The tuning voltage for the 1.25-MHz step oscillator is tapped at the wiper of R385 and applied via L300, L301 to the two diode quartets V300 to V307 arranged antiparallel.

Summing oscillator PLL

The summing oscillator signal is routed from the power divider T20 to the two buffer amplifier ICs N20, N30. It is then converted by V21 to TTL level, divided by the two D flip-flops D20A, B in a ratio of 4:1 and applied via gate D220B and the emitter follower V220 to the YIG synchronization module (in the case of a multi-loop sweep).

V30 amplifies the summing oscillator signal to approx. +7 dBm and drives th LO gate of mixer N40.

The resulting IF signal of 1.25 to 2.5 MHz is freed from interfering high-frequency mixture products in the lowpass filter with L40, L41, L42. The resistor R50 coupled via C40 provides matching for high-frequency mixture products.

The IF signal is amplified by approx. 20 dB by the amplifier stage V40, V41 and applied to the phase detector D70, D72A via the TTL converter stage.

The second input frequency of the phase detector, the reference frequency, comes from frequency divider D71. This frequency divider divides the signal of 10 to 20 MHz from the sweep synthesizer module in a ratio of 1:8 down to 1.25 MHz to 2.5 MHz (in the case of the multi-loop sweep).

D71 is blocked by the clear input with a single-loop sweep, and the sweep synthesizer signal 5 to 20 MHz is directly applied to output X1 of the module via the gates D210A, B and D220A, B.

In the case of the multi-loop sweep, correction signals are generated by phase detector D70 and integrated by differential integrator N82 into a DC control voltage. The lowpass L80, L81 with a pole at 1.25 MHz is used to suppress the reference frequency of 1.25 to 2.5 MHz and its harmonics. The voltage at P80 is present with the same magnitude at the output of N80 but in inverted form (adjustable using R91).

The tuning voltage of the 1.25-MHz step oscillator and the tuning voltage of the sweep oscillator are added to this control voltage as shown in Fig. 6-2.

The DC control voltage of the summing oscillator (at X94A) compensates synchronization errors in the summation and 1.25-MHz step oscillators. At the same time, the tolerances of the tuning voltage gradient of the sweep synthesizer, and the curvature of the tuning characteristic of the summing loop module and the associated, variable feedthrough of the sweep synthesizer tuning voltage are also compensated.

The comparators N120/A, B and N110/B, C are connected as window discriminators and are used to monitor the tuning voltage of the 1.25-MHz step oscillator and the control voltage of the summing oscillator.

N120/1, 2 deliver a logical 0 signal (TTL level) if the tuning voltage falls below +2 V or rises above +20 V; this leads to the interrupt signal FREQUENCY STEP OSCILLATOR at D150A/6, and the LED H2 then lights up.

An interrupt signal FREQUENCY SUMMING LOOP is also output if the control voltage of the summing oscillator (at P80) rises above a value of ± 10 V. This causes LED H1 to light up.

The interrupt signals FREQUENCY STEP OSCILLATOR and FREQUENCY SUMMING LOOP are stored in D150A, B until a positive INTRES pulse resets the D flip-flops.

The tuning voltage of the 1.25-MHz step oscillator divided by a ratio of 11:1 is present at X10/A17 (signal STFSTO). The tuning voltage of the summing oscillator, also divided by a ratio of 11:1, is present at X10/A16 (X95A; signal STFSU01).

The voltage (signal STFSU02) present at X18A is related to the summing oscillator control voltage (at test point P80) as follows:

$$V_{STFSU02} = \frac{V_{P80}[V] + 15\,[V]}{22}$$

The signals STFSTO, STFSU01, STFSU02 are used for instrument selftests.

N81A and V140 generate a low-noise voltage of + 5.1 V for the ECL and TTL components from the + 5 V* (approx. 5.5 V).

The control data for the summing loop module are latched in D151.

6.1.2 Parallel Interface

Data transfer

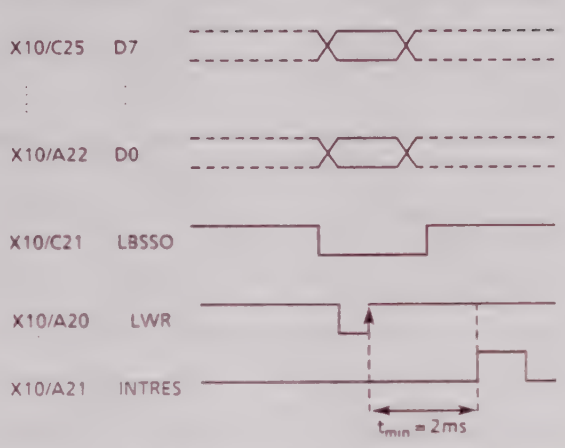

Note: the data are transferred with the rising edge of the LWR signal if LBSSO is Low at this time.

Mathematical relationship of synthesizer frequencies

Multi-loop sweep

$f_{\Sigma Osc.} = f_{Step\ osc.} + f_{Sweep\ synth\ /8}$

where $f_{Sweep\ synth}$ = 10 to 20 MHz

$f_{Step\ osc}$ = s x 10 MHz,

where s = 3.875, 4, 4.125, ...7.75

$f_{\Sigma\ synth.}$ = 1/4 ($f_{\Sigma Osc}$) = output frequency of summing loop module

Single-loop sweep

$f_{\Sigma\ Synth.} = f_{Sweep\ synth}$

Table 6-1 Setting code

Multi-loop sweep .

$f_{\Sigma\ Osc.}$ [MHz]	$f_{Step\ osc.}$ [MHz]	Divider factor s	Data word								Decimal equivalent
			DP7	DP6	DP5	DP4	DP3	DP2	DP1	DP0	
40 to 41.25	38.75	3.875	1	0	1	0	1	0	0	1	169
41 25 to 42 5	40	4	1	0	1	0	1	0	0	0	168
42.5 to 43.75	41.25	4.125	1	0	1	0	0	1	1	1	167
	:										.
	:										:
77.5 to 78.75	76.25	7.625	1	0	0	0	1	0	1	1	139
78.75 to 80	77.5	7.75	1	0	0	0	1	0	1	0	138

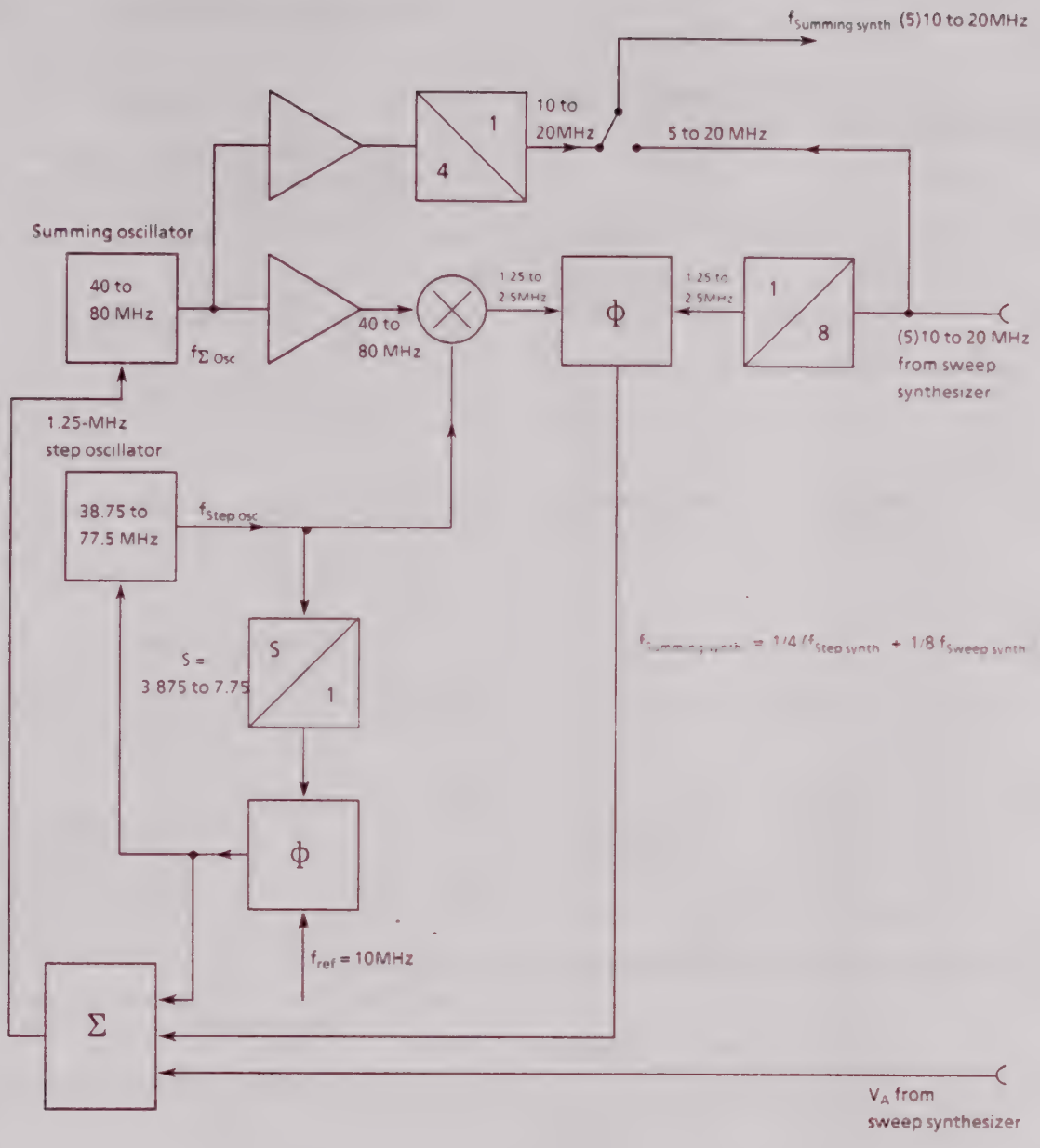

Fig. 6-1 Block diagram of summing loop module

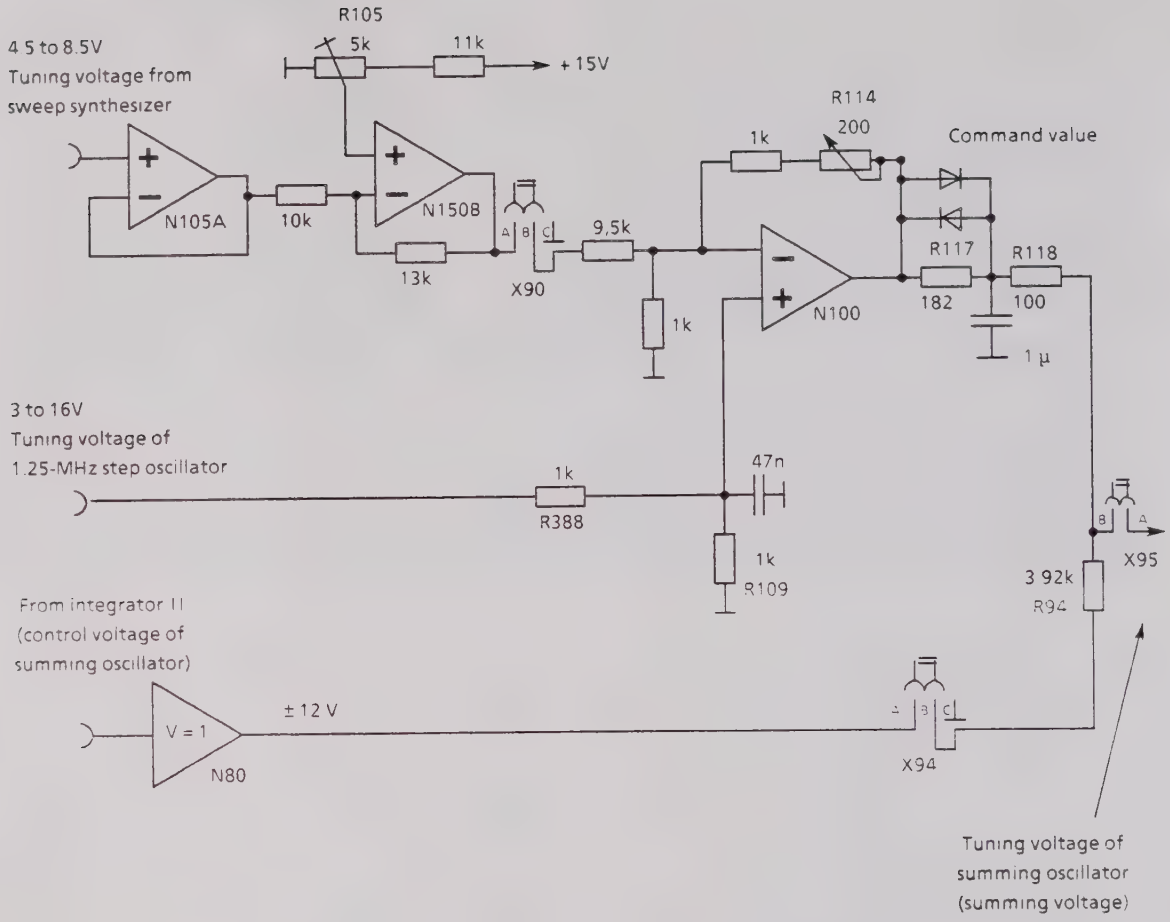

Fig. 6-2 Block diagram of tuning voltage generation of summing oscillator

6.2 Testing and Adjustment

6.2.1 Oscillator Level

Set the centre frequency to 100 MHz, span = 0 Hz on the instrument. Remove jumper X39. Apply voltage of +10 V ±10 mV to X38B, connect spectrum analyzer to X130/3 using adapter cable.

- Adjust oscillator level to +1 dBm ±0.3 dB using R309.

Remove jumper X97, apply DC voltage of +10 V ±10 mV to X95A, connect spectrum analyzer to X310/3 using adapter cable.

- Adjust oscillator to +1 dBm ±0.3 dB using R7.

6.2.2 Oscillator Frequencies

Apply DC voltage of +16.5 V ±10 mV to X38B Connect frequency counter (or spectrum analyzer) to X310/3 using adapter cable

- Adjust frequency of 1.25-MHz step oscillator to 77.5 MHz ±20 kHz using L600

Apply DC voltage of +16.5 V ±10 mV to X95A. Connect frequency counter (or spectrum analyzer) to X310/3 using adapter cable.

- Adjust frequency of summing oscillator to 78.75 MHz ±20 kHz using L500.

Subsequently connect jumpers X110, X310.

6.2.3 Testing the RF Amplifier, Testing the Oscillator Frequency Ranges

Step oscillator branch

Connect spectrum analyzer to X32A, vary DC voltage at X38B from +2.5 V to +17 V:

- Nominal level at X32A: 0 dBm +3 dB/–2 dB
- Nominal frequency at X32A: 38 MHz to 78 MHz
- Test for ECL level at N310 pins 3, 6, 7 and for TTL level at D345/3 using oscilloscope

Summing oscillator branch

Connect X33
Connect spectrum analyzer to X30A. Vary DC voltage at X15A from +2.5 to +17.5 V.

- Nominal level at X30A: +7 dBm +3 dB/–2 dB
- Nominal frequency at X30A: 39.5 MHz to 40.5 MHz
- Test for TTL level at V21/1 using oscilloscope

Subsequently connect X31.

Testing the IF branch

Vary the DC voltage at X38B and X95A from +2.5 V to +17.5 V.

- Test for TTL level at V21/1 using oscilloscope (f = 0.5 to 2 MHz).

Subsequently connect jumpers X97 and X39.

Testing the step oscillator PLL

Connect analyzer to X32, connect cable W33 to X8 (reference frequency 10 MHz).

Temporarily remove jumper X21.

Set the following centre frequencies (span = 0 Hz) on the instrument:

- Check the level, frequency and spurious at:

Centre frequency [MHz]	f_{X32A} [MHz]	$Level_{X32A}$ [dBm]	Spurious [dB]
98.600	38.75	>–2	>60
99.5375	42.5	>–2	>60
100.1625	45	>–2	>60
100.7875	47.5	>–2	>60
101.4125	50	>–2	>60
104.5375	60	>–2	>60
106.4125	77.5	>–2	>60

Subsequently insert jumper X33.

Adjusting and testing the tuning voltage tracking

Connect jumper X91 to X90B, C
Connect jumper X93 to X94B, C
Connect jumper X97 to X95A, B

Enter a centre frequency of 104.5375 MHz (span = 0 Hz) on the instrument.

- Adjust the differential DC voltage between X95A and X38B to 0 V ± 5 mV using R114.

- With a centre frequency of 98.6 MHz and 106.4125 MHz (span = 0 Hz) check the differential voltage at X95A and X38B:

  Nominal differential voltage: ± 30 mV.

Testing the summing oscillator PLL

Enter a centre frequency of 104.5375 MHz (nominal frequency at cable W77: 100 MHz).

- Nominal DC voltage at X10/C15:
  + 4 V ± 300 mV.
  Connect cable W77 to X3.

- Adjust DC voltage at X90A to 0 V ± 50 mV.

Insert jumpers as follows:

X91 at X90A, B
X93 at X94A, B
X97 at X95A, B
X33 at X32A, B
X81 at X80

Connect spectrum analyzer to X1.

- Nominal frequency at X1: 15.0 MHz (level: > + 3 dBm).

- Adjust the magnitude of the voltage at X94A to the same as that at P80 using R91:
  Nominal value ± 50 mV.

Enter start frequency 98.6 MHz, stop frequency 103.599 MHz, RBW = 100 Hz on the instrument.

- Test the voltage range at X94A for ± 8 V using an oscilloscope (not counting switching peaks).

Enter start frequency 103.6 MHz, stop frequency 108.599 MHz, RBW = 100 Hz on the instrument.

- Also test voltage range at X94A for ± 8 V (not counting switching peaks).

Testing the selftest voltages, testing the lock-in circuit

Adjust centre frequency to 104.5375 MHz, span = 0 Hz on instrument

- Nominal voltage at
  X38A: 16.5 V ± 100 mV
  X96A: 16.5 V ± 100 mV
  P80: 0 V ± 100 mV
  X10/A17: $U_{X38A}/11$ ± 20 mV
  X10/A16: $U_{X96A}/11$ ± 20 mV
  X10/A18: 0.682 V ± 30 mV

Testing the lock-in of the summing oscillator

Clamp oscilloscope probe to N81 pin 8.

Adjust a centre frequency of 106.599 MHz, span = 0 Hz on instrument.

- Nominal voltage at N81 pin 8: –13 V to –15 V

Adjust a centre frequency of 98.600 MHz, span = 0 Hz on the instrument and switch back and forth between the two settings.

- Nominal voltage at N81 pin 8:

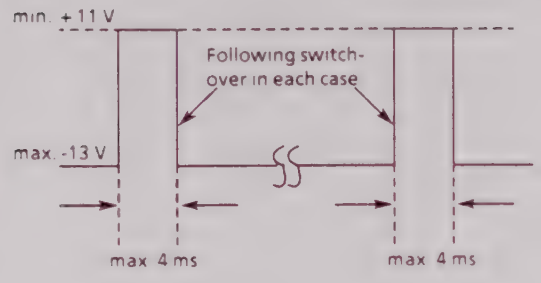

- The error messages FREQUENCY STEP OSCILLATOR or FREQUENCY SUMMING LOOP must not appear on the instrument screen.

6.2.4 Final Test

(Cover screwed onto module, cables W33 and W77 connected.)

Single-loop sweep
(Residual bandwidth >3 kHz)

Enter RBW 10 kHz and sweep time 100 s on the instrument.

Enter start frequency of 98.6 MHz, span = 100 Hz.

Connect spectrum analyzer to output X1

- Check signals LEFSTO (X10/C20), LEFSUO (X10/C19) for logical 0.
- With the instrument settings otherwise the same, check the frequency, level and spurious:

Start frequency	Output X1		
	Frequency [MHz]	Level [dBm]	Spurious (f_m>10kHz)
98.6 MHz	10 000 to 10 0001	> + 3	>90 dBc
103 6 MHz	15.0000 to 15.0001	> + 3	>90 dBc
108.599 MHz	19.999 to 19 9991	> + 3	>90 dBc

Multi-loop sweep
(Residual bandwidth ≤3 kHz)

Connect spectrum analyzer to output X1.

Enter RBW 3 kHz, sweep time 100 s, span 0 Hz on the instrument.

- Test the output frequency, level and spurious at:

Start frequency	Output X1			
	Frequency [MHz]	Level [dBm]	Spurious	
			(f_m>200Hz)	(f_m>1kHz)
98.6 MHz	10 000	> + 3	>80 dBc	>90 dBc
103.6 MHz	15 000	> + 3	>80 dBc	>90 dBc
108 599 MHz	19 999	> + 3	>80 dBc	>90 dBc

Enter span = 5 MHz and test with the instrument settings otherwise the same:

Start frequency	Output X1 frequency
98 6 MHz	10 000 to 15 000 MHz

Span = 4,999 MHz eingeben, bei ansonsten gleicher Geräteeinstellung prüfen:

Start frequency	Output X1 frequency
103 6 MHz	15 000 to 19 999 MHz

The error messages FREQUENCY STEP OSCILLATOR or FREQUENCY SUMMING LOOP must not appear on the instrument screen.

6.3 Troubleshooting

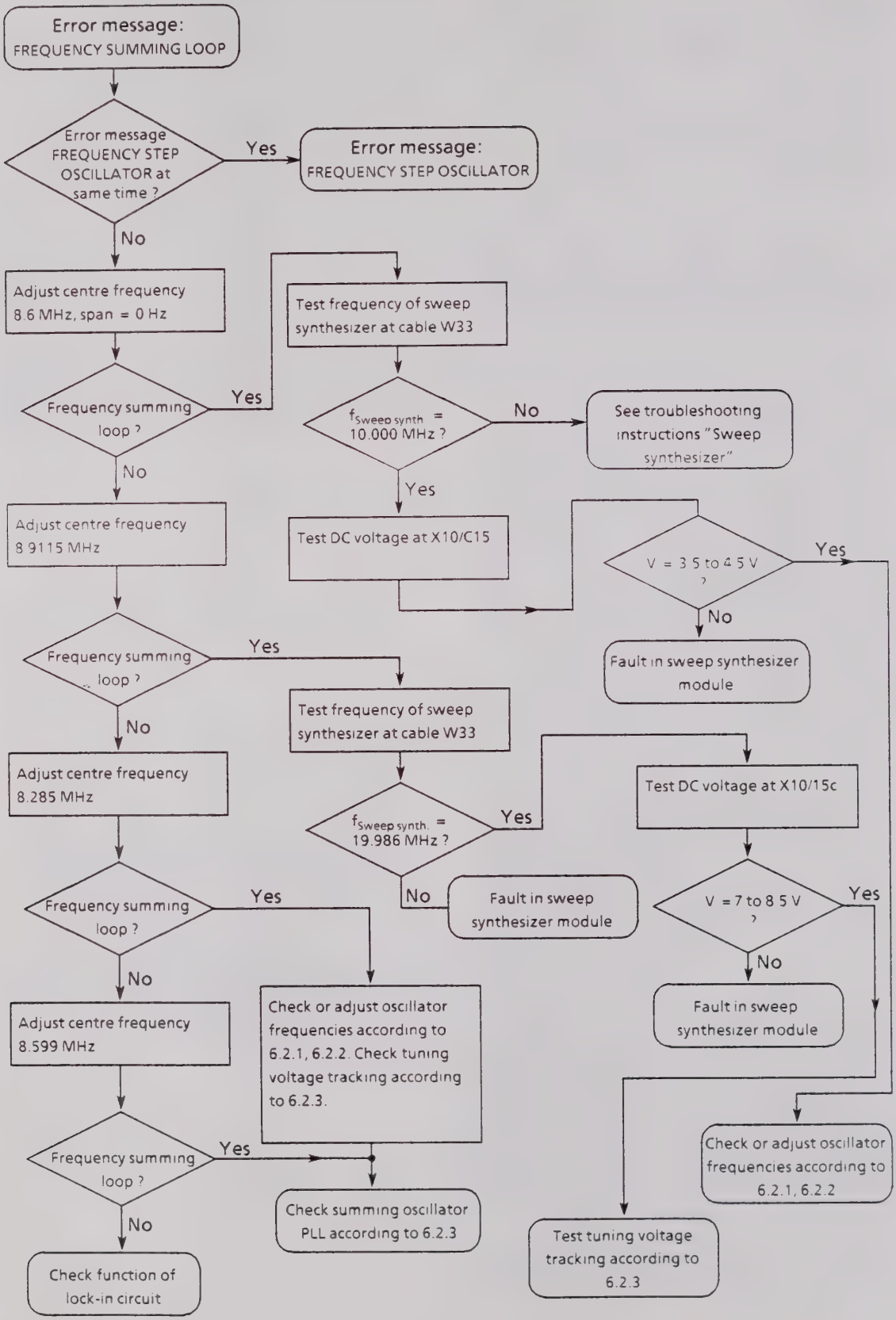

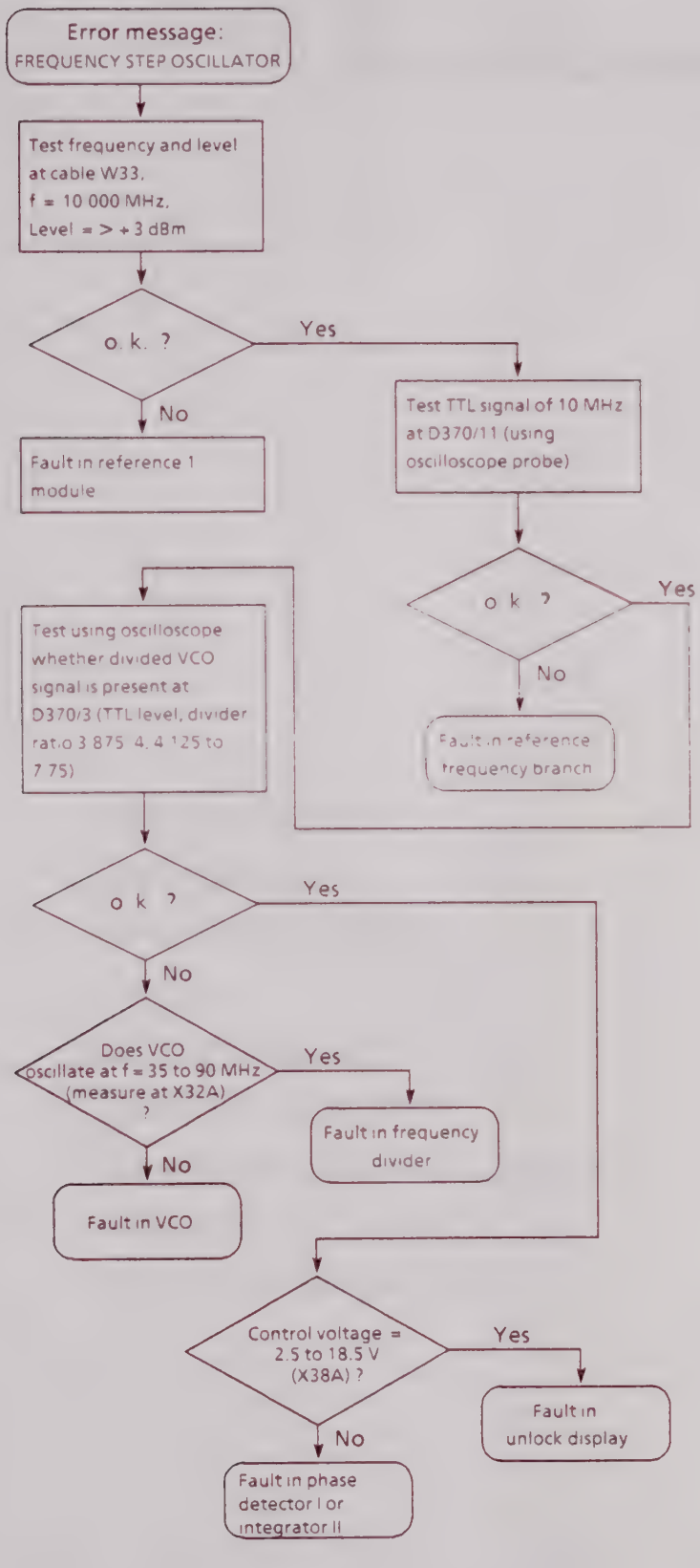
Error message:
FREQUENCY STEP OSCILLATOR
Test frequency and level at cable W33, f = 10 000 MHz, Level = > + 3 dBm
o. k. ?
Yes
No
Fault in reference 1 module
Test TTL signal of 10 MHz at D370/11 (using oscilloscope probe)
o k ?
Yes
No
Fault in reference frequency branch
Test using oscilloscope whether divided VCO signal is present at D370/3 (TTL level, divider ratio 3 875 4, 4 125 to 7 75)
o k ?
Yes
No
Does VCO oscillate at f = 35 to 90 MHz (measure at X32A) ?
Yes
Fault in frequency divider
No
Fault in VCO
Control voltage = 2.5 to 18.5 V (X38A) ?
Yes
Fault in unlock display
No
Fault in phase detector I or integrator II

ROHDE&SCHWARZ

Schaltteillisten
Stromläufe
Bestückungspläne

Part lists
Circuit diagrams
Components plans

Listes des pièces détachées
Schémas de Circuit
Plans des composants

(R 29500 Bl 2)
095.1000 Bl. 2

Kennz. Comp.No.	Benennung Designation	Sachnummer Stock No.	Hersteller Manufacturer	Bezeichnung Designation	enthalten in contained in
.	ZUGEH.STROML./CIRC.DIAGR. 807.4015 S				
C1	CC 1NF+-10%63V K2000 CERAMIC CAPACITOR	CC 022.0784	VALVO	2222 63051 102	
C2	CC 1NF+-10%63V K2000 CERAMIC CAPACITOR	CC 022.0784	VALVO	2222 63051 102	
C3	CE 1,0UF+-20%35V 5X 4X 7 ELECTROLYTIC CAPACITOR	CE 022.8185	ROEDERSTEI	ETR 1 1/40 20%	
C4	CC 2,2NF+-10%5X6R2000 CAPACITOR	CC 087.7060	VALVO	2222 63051 222	
C5	CC 4,7NF+-10%6X9R2000 CAPACITOR	CC 087.7102	VALVO	2222 63051 472	
C6	CE 47UF-10+50% 40V 9X13 ELECTROLYTIC CAPACITOR	CE 006.7142	ROEDERST	EK 00 CB 247 G	
C7	CC 10NF-20+50%7X8R4000 CAPACITOR	CC 087.7525	VALVO	2222 63051 64051103	
C8	CC 10NF-20+50%7X8R4000 CAPACITOR	CC 087.7525	VALVO	2222 63051 64051103	
C9	CC 27PF+-2%4X5NP0 CAPACITOR	CC 087.6470	VALVO	2222 678 10279	
C20	CC 4,7NF+-10%6X9R2000 CAPACITOR	CC 087.7102	VALVO	2222 63051 472	
C21	CC 4,7NF+-10%6X9R2000 CAPACITOR	CC 087.7102	VALVO	2222 63051 472	
C22	CC 10NF-20+50%7X8R4000 CAPACITOR	CC 087.7525	VALVO	2222 63051 64051103	
C23	CC 10NF-20+50%7X8R4000 CAPACITOR	CC 087.7525	VALVO	2222 63051 64051103	
C30	CC 4,7NF+-10%6X9R2000 CAPACITOR	CC 087.7102	VALVO	2222 63051 472	
C31	CC 10NF-20+50%7X8R4000 CAPACITOR	CC 087.7525	VALVO	2222 63051 64051103	
C32	CC 10NF-20+50%7X8R4000 CAPACITOR	CC 087.7525	VALVO	2222 63051 64051103	
C33	CC 10NF-20+50%7X8R4000 CAPACITOR	CC 087.7525	VALVO	2222 63051 64051103	
C34	CC 2,2NF+-10%5X6R2000 CAPACITOR	CC 087.7060	VALVO	2222 63051 222	
C35	CC 330PF+-10%3X4R2000 CAPACITOR	CC 087.6970	VALVO	2222 63051 331	
C36	CC 2,2NF+-10%5X6R2000 CAPACITOR	CC 087.7060	VALVO	2222 63051 222	
C37	CC 8,2PF+-0,25PF3X4NP0 CAPACITOR	CC 087.6412	VALVO	2222 678 09828	
C38	CC 10NF-20+50%7X8R4000 CAPACITOR	CC 087.7525	VALVO	2222 63051 64051103	
C40	CC 47PF+-2%5X6NP0 CAPACITOR	CC 087.6506	VALVO	2222 678 10479	
C41 ..44	CC 220PF+-2%6X7N750 CAPACITOR	CC 087.6941	VALVO	2222 678 58221	
C45	CC 10PF+-0,25PF3X4NP0 CAPACITOR	CC 087.6429	VALVO	2222 678 09109	
C46	CK 470NF+-5%63V5RM MKT CAPACITOR	CK 099.2975	WIMA	MKS2/63/0,47UF/5%	
C47	CC 10NF-20+50%7X8R4000 CAPACITOR	CC 087.7525	VALVO	2222 63051 64051103	
C48	CC 10NF-20+50%7X8R4000 CAPACITOR	CC 087.7525	VALVO	2222 63051 64051103	
C49	CC 47NF+-10%50V5K1200VIEL CAPACITOR	CC 082.7810	UNION CARB	CK05BX473K	
C50	CC 10NF-20+50%7X8R4000 CAPACITOR	CC 087.7525	VALVO	2222 63051 64051103	
C51	CC 10NF-20+50%7X8R4000 CAPACITOR	CC 087.7525	VALVO	2222 63051 64051103	
C52	CK 470NF+-5%63V5RM MKT CAPACITOR	CK 099.2975	WIMA	MKS2/63/0,47UF/5%	
C70	CC 10NF-20+50%7X8R4000 CAPACITOR	CC 087.7525	VALVO	2222 63051 64051103	
C71	CC 10NF-20+50%7X8R4000 CAPACITOR	CC 087.7525	VALVO	2222 63051 64051103	
C72	CC 10NF-20+50%7X8R4000 CAPACITOR	CC 087.7525	VALVO	2222 63051 64051103	
C73	CC 680PF+-10%4X5R2000 CAPACITOR	CC 087.7019	VALVO	2222 63051 681	
C74	CC 680PF+-10%4X5R2000 CAPACITOR	CC 087.7019	VALVO	2222 63051 681	

Für diese Unterlage behalten wir uns alle Rechte vor

Kennz. Comp.No.	Benennung Designation	Sachnummer Stock No.	Hersteller Manufacturer	Bezeichnung Designation	enthalten in contained in
C80	CC 680PF+-10%4X5R2000 CAPACITOR	CC 087.7019	VALVO	2222 63051 681	
C81	CC 1UF+-10%50V7K1200VIEL CAPACITOR	084.5538	UNION CARB	CKO6BX105K	
C82	CC 680PF+-10%4X5R2000 CAPACITOR	CC 087.7019	VALVO	2222 63051 681	
C83	CC 1UF+-10%50V7K1200VIEL CAPACITOR	084.5538	UNION CARB	CKO6BX105K	
C84	CC 100NF+-10%50V5K1200VIE CAPACITOR	CC 084.5350	UNION CARB	CKO5BX104K	
C85	CC 100NF+-10%50V5K1200VIE CAPACITOR	CC 084.5350	UNION CARB	CKO5BX104K	
C86	CC 2,7PF+-0,25PF3X4NP0 CERAMIC CAPACITOR	CC 087.6358	VALVO	2222 678 09278	
C87	CC 1NF+-10%63V K2000 CERAMIC CAPACITOR	CC 022.0784	VALVO	2222 63051 102	
C88	CC 120PF+-2%6X9NP0 CAPACITOR	CC 087.6558	VALVO	2222 678 10121	
C89	CC 1,8NF+-10%4X5R2000 CAPACITOR	CC 087.7054	VALVO	2222 63051 182	
C90	CC 1NF+-10%63V K2000 CERAMIC CAPACITOR	CC 022.0784	VALVO	2222 63051 102	
C91	CK 470NF+-5%63V5RM MKT CAPACITOR	CK 099.2975	WIMA	MKS2/63/0,47UF/5%	
C92	CC 2,7PF+-0,25PF3X4NP0 CERAMIC CAPACITOR	CC 087.6358	VALVO	2222 678 09278	
C93	CC 100NF+-10%50V5K1200VIE CAPACITOR	CC 084.5350	UNION CARB	CKO5BX104K	
C94	CC 100NF+-10%50V5K1200VIE CAPACITOR	CC 084.5350	UNION CARB	CKO5BX104K	
C100	CC 10NF-20+50%7X8R4000 CAPACITOR	CC 087.7525	VALVO	2222 63051 64051103	
C101	CC 100NF+-10%50V5K1200VIE CAPACITOR	CC 084.5350	UNION CARB	CKO5BX104K	
C102	CC 10NF-20+50%7X8R4000 CAPACITOR	CC 087.7525	VALVO	2222 63051 64051103	
C104	CC 100NF+-10%50V5K1200VIE CAPACITOR	CC 084.5350	UNION CARB	CKO5BX104K	
C105	CC 1UF+-10%50V7K1200VIEL CAPACITOR	084.5538	UNION CARB	CKO6BX105K	
C106	CC 10NF-20+50%7X8R4000 CAPACITOR	CC 087.7525	VALVO	2222 63051 64051103	
C109	CK 47NF+-5%63V5RM MKT CAPACITOR	CK 099.2917	WIMA	MKS2/63/0,047UF/5%	
C120 ..124	CC 10NF-20+50%7X8R4000 CAPACITOR	CC 087.7525	VALVO	2222 63051 64051103	
C126 ..131	CC 10NF-20+50%7X8R4000 CAPACITOR	CC 087.7525	VALVO	2222 63051 64051103	
C140	CC 10NF-20+50%7X8R4000 CAPACITOR	CC 087.7525	VALVO	2222 63051 64051103	
C141	CE 47UF-10+50% 40V 9X13 ELECTROLYTIC CAPACITOR	CE 006.7142	ROEDERST	EK 00 CB 247 G	
C142	CC 10NF-20+50%7X8R4000 CAPACITOR	CC 087.7525	VALVO	2222 63051 64051103	
C143	CC 10NF-20+50%7X8R4000 CAPACITOR	CC 087.7525	VALVO	2222 63051 64051103	
C144	CE 100UF-10+50% 16V 9X13 ELECTROLYTIC CAPACITOR	CE 006.7165	ROEDERST	EK 00CB 310 D	
C145	CE 47UF-10+50% 40V 9X13 ELECTROLYTIC CAPACITOR	CE 006.7142	ROEDERST	EK 00 CB 247 G	
C146	CC 10NF-20+50%7X8R4000 CAPACITOR	CC 087.7525	VALVO	2222 63051 64051103	
C147	CE 47UF-10+50% 40V 9X13 ELECTROLYTIC CAPACITOR	CE 006.7142	ROEDERST	EK 00 CB 247 G	
C148	CC 10NF-20+50%7X8R4000 CAPACITOR	CC 087.7525	VALVO	2222 63051 64051103	
C149	CC 10NF-20+50%7X8R4000 CAPACITOR	CC 087.7525	VALVO	2222 63051 64051103	
C150	CE 47UF-10+50% 40V 9X13 ELECTROLYTIC CAPACITOR	CE 006.7142	ROEDERST	EK 00 CB 247 G	
C151	CC 10NF-20+50%7X8R4000 CAPACITOR	CC 087.7525	VALVO	2222 63051 64051103	
C152	CC 10NF-20+50%7X8R4000 CAPACITOR	CC 087.7525	VALVO	2222 63051 64051103	
C155	CE 100UF-10+50% 16V 9X13 ELECTROLYTIC CAPACITOR	CE 006.7165	ROEDERST	EK 00CB 310 D	
C160 ..163	CC 10NF-20+50%7X8R4000 CAPACITOR	CC 087.7525	VALVO	2222 63051 64051103	

Kennz. Comp.No.	Benennung Designation	Sachnummer Stock No.	Hersteller Manufacturer	Bezeichnung Designation	enthalten in contained in
C165 ..175	CC 10NF-20+50%7X8R4000 CAPACITOR	CC 087.7525	VALVO	2222 63051 64051103	
C200 ..204	CC 10NF-20+50%7X8R4000 CAPACITOR	CC 087.7525	VALVO	2222 63051 64051103	
C207	CC 100NF+-10%50V5K 1200VIE CAPACITOR	CC 084.5350	UNION CARB	CK05BX104K	
C208	CC 100NF+-10%50V5K 1200VIE CAPACITOR	CC 084.5350	UNION CARB	CK05BX104K	
C210	CC 10NF-20+50%7X8R4000 CAPACITOR	CC 087.7525	VALVO	2222 63051 64051103	
C220	CC 10NF-20+50%7X8R4000 CAPACITOR	CC 087.7525	VALVO	2222 63051 64051103	
C221	CC 100NF+-10%50V5K 1200VIE CAPACITOR	CC 084.5350	UNION CARB	CK05BX104K	
C222	CC 10NF-20+50%7X8R4000 CAPACITOR	CC 087.7525	VALVO	2222 63051 64051103	
C223	CC 10NF-20+50%7X8R4000 CAPACITOR	CC 087.7525	VALVO	2222 63051 64051103	
C224	CC 22PF+-1%50V NP0 1206 CERAMIC CHIP CAPACITOR	CC 099.8396	VITRAMON	VJ1206A220JFA	
C301	CC 1NF+-10%63V K2000 CERAMIC CAPACITOR	CC 022.0784	VALVO	2222 63051 102	
C302	CC 1NF+-10%63V K2000 CERAMIC CAPACITOR	CC 022.0784	VALVO	2222 63051 102	
C303	CE 1,0UF+-20%35V 5X 4X 7 ELECTROLYTIC CAPACITOR	CE 022.8185	ROEDERSTEI	ETR 1 1/40 20%	
C304	CC 2,2NF+-10%5X6R2000 CAPACITOR	CC 087.7060	VALVO	2222 63051 222	
C305	CC 4,7NF+-10%6X9R2000 CAPACITOR	CC 087.7102	VALVO	2222 63051 472	
C306	CE 47UF-10+50% 40V 9X13 ELECTROLYTIC CAPACITOR	CE 006.7142	ROEDERST	EK 00 CB 247 G	
C307	CC 10NF-20+50%7X8R4000 CAPACITOR	CC 087.7525	VALVO	2222 63051 64051103	
C308	CC 10NF-20+50%7X8R4000 CAPACITOR	CC 087.7525	VALVO	2222 63051 64051103	
C309	CC 27PF+-2%4X5NP0 CAPACITOR	CC 087.6470	VALVO	2222 678 10279	
C311	CC 4,7NF+-10%6X9R2000 CAPACITOR	CC 087.7102	VALVO	2222 63051 472	
C312	CC 4,7NF+-10%6X9R2000 CAPACITOR	CC 087.7102	VALVO	2222 63051 472	
C313	CC 10NF-20+50%7X8R4000 CAPACITOR	CC 087.7525	VALVO	2222 63051 64051103	
C315	CC 4,7NF+-10%6X9R2000 CAPACITOR	CC 087.7102	VALVO	2222 63051 472	
C316	CC 10NF-20+50%7X8R4000 CAPACITOR	CC 087.7525	VALVO	2222 63051 64051103	
C340	CC 10NF-20+50%7X8R4000 CAPACITOR	CC 087.7525	VALVO	2222 63051 64051103	
C341	CE 2,2UF+-20%20V 5X 4X 7 ELECTROLYTIC CAPACITOR	CE 022.8104	ROEDERSTEI	ETR 1 2,2/20 20%	
C344	CC 10NF-20+50%7X8R4000 CAPACITOR	CC 087.7525	VALVO	2222 63051 64051103	
C350	CC 10NF-20+50%7X8R4000 CAPACITOR	CC 087.7525	VALVO	2222 63051 64051103	
C351	CC 10NF-20+50%7X8R4000 CAPACITOR	CC 087.7525	VALVO	2222 63051 64051103	
C370 ..373	CC 470PF+-10%3X4R2000 CAPACITOR	CC 087.6993	VALVO	2222 63051 471	
C375	CC 10NF-20+50%7X8R4000 CAPACITOR	CC 087.7525	VALVO	2222 63051 64051103	
C380	CC 1UF+-10%50V7K 1200VIEL CAPACITOR	084.5538	UNION CARB	CK06BX105K	
C381	CC 2,7PF+-0,25PF3X4NP0 CERAMIC CAPACITOR	CC 087.6358	VALVO	2222 678 09278	
C382	CC 1UF+-10%50V7K 1200VIEL CAPACITOR	084.5538	UNION CARB	CK06BX105K	
C383	CC 1NF+-10%63V K2000 CERAMIC CAPACITOR	CC 022.0784	VALVO	2222 63051 102	
C384	CC 120PF+-2%6X9NP0 CAPACITOR	CC 087.6558	VALVO	2222 678 10121	
C385	CC 1,8NF+-10%4X5R2000 CAPACITOR	CC 087.7054	VALVO	2222 63051 182	
C386	CC 27PF+-2%4X5NP0 CAPACITOR	CC 087.6470	VALVO	2222 678 10279	
C387	CC 1NF+-10%63V K2000 CERAMIC CAPACITOR	CC 022.0784	VALVO	2222 63051 102	

Für diese Unterlagen behalten wir uns alle Rechte vor

Kennz. Comp.No.	Benennung Designation	Sachnummer Stock No.	Hersteller Manufacturer	Bezeichnung Designation	enthalten in contained in
C388	CE 2,2UF+-20%40V SAL ELECTR.CAPACITOR	CE 007.3911	VALVO	2222 122 37228	
C390	CC 10NF-20+50%7X8R4000 CAPACITOR	CC 087.7525	VALVO	2222 63051 64051103	
C391	CC 10NF-20+50%7X8R4000 CAPACITOR	CC 087.7525	VALVO	2222 63051 64051103	
C394	CC 100NF+-10%50V5K 1200VIE CAPACITOR	CC 084.5350	UNION CARB	CK05BX104K	
C395	CC 1UF+-10%50V7K 1200VIEL CAPACITOR	084.5538	UNION CARB	CK06BX105K	
C400 ..403	CC 10NF-20+50%7X8R4000 CAPACITOR	CC 087.7525	VALVO	2222 63051 64051103	
C405	CC 10NF-20+50%7X8R4000 CAPACITOR	CC 087.7525	VALVO	2222 63051 64051103	
C406	CC 10NF-20+50%7X8R4000 CAPACITOR	CC 087.7525	VALVO	2222 63051 64051103	
C550	CC 10NF-20+50%7X8R4000 CAPACITOR	CC 087.7525	VALVO	2222 63051 64051103	
C560	CC 10NF-20+50%7X8R4000 CAPACITOR	CC 087.7525	VALVO	2222 63051 64051103	
C570	CC 10NF-20+50%7X8R4000 CAPACITOR	CC 087.7525	VALVO	2222 63051 64051103	
C580 ..585	CC 10NF-20+50%7X8R4000 CAPACITOR	CC 087.7525	VALVO	2222 63051 64051103	
C590	CC 10NF-20+50%7X8R4000 CAPACITOR	CC 087.7525	VALVO	2222 63051 64051103	
C595	CC 10NF-20+50%7X8R4000 CAPACITOR	CC 087.7525	VALVO	2222 63051 64051103	
C700	CC 10NF-20+50%7X8R4000 CAPACITOR	CC 087.7525	VALVO	2222 63051 64051103	
C701	CC 10NF-20+50%7X8R4000 CAPACITOR	CC 087.7525	VALVO	2222 63051 64051103	
C702	CC 10NF-20+50%7X8R4000 CAPACITOR	CC 087.7525	VALVO	2222 63051 64051103	
C703	CC 10NF-20+50%7X8R4000 CAPACITOR	CC 087.7525	VALVO	2222 63051 64051103	
C710 ..713	CC 10NF-20+50%7X8R4000 CAPACITOR	CC 087.7525	VALVO	2222 63051 64051103	
C730	CC 10NF-20+50%7X8R4000 CAPACITOR	CC 087.7525	VALVO	2222 63051 64051103	
C740	CC 10NF-20+50%7X8R4000 CAPACITOR	CC 087.7525	VALVO	2222 63051 64051103	
C750	CC 10NF-20+50%7X8R4000 CAPACITOR	CC 087.7525	VALVO	2222 63051 64051103	
C751	CC 10NF-20+50%7X8R4000 CAPACITOR	CC 087.7525	VALVO	2222 63051 64051103	
C770	CC 10NF-20+50%7X8R4000 CAPACITOR	CC 087.7525	VALVO	2222 63051 64051103	
C780	CC 10NF-20+50%7X8R4000 CAPACITOR	CC 087.7525	VALVO	2222 63051 64051103	
C800	CC 10NF-20+50%7X8R4000 CAPACITOR	CC 087.7525	VALVO	2222 63051 64051103	
C801	CC 10NF-20+50%7X8R4000 CAPACITOR	CC 087.7525	VALVO	2222 63051 64051103	
C805	CC 10NF-20+50%7X8R4000 CAPACITOR	CC 087.7525	VALVO	2222 63051 64051103	
C806	CC 10NF-20+50%7X8R4000 CAPACITOR	CC 087.7525	VALVO	2222 63051 64051103	
D20	BL 74F74PC 2XD-FLIPFLOP DUAL D-FLIPFLOP	BL 344.6694	FAIRCHILD	74F74PC	
D70	BL MM74HC74N 2XD-FLIPFL DUAL D FLIP-FLOP	BL 571.3171	NSC	MM74HC74N	
D71	BL MM74HC161N BIN.COUNT. SYNC.BIN.COUNTER	BL 641.7111	MOTOROLA	MC74HC161N	
D72	BL MM74HC00N 4X2IN.NAND QUAD 2-INPUT NAND GATE	BL 571.3194	MOTOROLA	MC74HC00N	
D150	BL MM74HC74N 2XD-FLIPFL DUAL D FLIP-FLOP	BL 571.3171	NSC	MM74HC74N	
D151	BL PC74HC377P 8XD-FF EN OCTAL D-FLIP-FLOP	BL 806.0045	VALVO	PC74HC377P	
D210	BL 74F00PC 4X2IN.NANDG QUAD-NAND-GATE	BL 344.6659	FAIRCHILD	74F00PC	
D220	BL 74F00PC 4X2IN.NANDG QUAD-NAND-GATE	BL 344.6659	FAIRCHILD	74F00PC	
D340	BL F10016DC 4B. COUNTER COUNTER	BL 344.7049	FAIRCHILD	10016DC	

Kennz. Comp.No.	Benennung Designation	Sachnummer Stock No.	Hersteller Manufacturer	Bezeichnung Designation	enthalten in contained in
D341	BL MC10131L 2XD FLIPFL FLIP FLOP	BL 475.1166	MOTOROLA	MC10131L	
D344	BL MC10102L 4X2INP.NORG NOR GATE	BL 350.0007	MOTOROLA	MC10102L	
D345	BL 74F74PC 2XD-FLIPFLOP DUAL D-FLIPFLOP	BL 344.6694	FAIRCHILD	74F74PC	
D346	BL 74F175PC 4XD-FLIPF. QUAD D FLIP-FLOP	BL 344.7355	FAIRCHILD	74F175PC	
D347	BL 74F283PC 4BIT-BIN.ADD 4BIT BINARY FULL ADDER	BL 373.6482	FAIRCHILD	74F283PC	
D370	BL 74F74PC 2XD-FLIPFLOP DUAL D-FLIPFLOP	BL 344.6694	FAIRCHILD	74F74PC	
D371	BL 74F00PC 4X2IN.NANDG QUAD-NAND-GATE	BL 344.6659	FAIRCHILD	74F00PC	
H1	AF QLMP1379 LED RT RD3 LED	AF 257.4736	HEWLETT	QLMP1379	
H2	AF QLMP1379 LED RT RD3 LED	AF 257.4736	HEWLETT	QLMP1379	
L1	LD UKW-DR.Z=750 OHM 50MHZ CHOKE	LD 026.4578	VALVO	431202036641	
L2	LD 3,90UH10%1,000HMO,263A CHOKE	LD 067.2934	DELEVAN	DROSSEL1025-34	
L3	LD 4,70UH10%1,200HMO,239A CHOKE	LD 067.2940	DELEVAN	DROSSEL1025-36	
L4	LD 10 UH 10% 3R3 144 MA CHOKE	LD 026.4184	DELEVAN	DROSSEL1025-44	
L5	LD 10 UH 10% 3R3 144 MA CHOKE	LD 026.4184	DELEVAN	DROSSEL1025-44	
L10	LF ROHRK.RD3,6XRD1,2XL3,3 TUBULAR CORE	LF 026.9286			
L20	LD 10 UH 10% 3R3 144 MA CHOKE	LD 026.4184	DELEVAN	DROSSEL1025-44	
L21	LD 4,70UH10%1,200HMO,239A CHOKE	LD 067.2940	DELEVAN	DROSSEL1025-36	
L40	LD 0,82UH10%0,850HMO,420A CHOKE	LD 067.2857	DELEVAN	DROSSEL 1025-18	
L41	LD 1,50UH10%0,220HMO,560A CHOKE	LD 067.2886	DELEVAN	DROSSEL 1025-24	
L42	LD 0,82UH10%0,850HMO,420A CHOKE	LD 067.2857	DELEVAN	DROSSEL1025-18	
L43	LD 10 UH 10% 3R3 144 MA CHOKE	LD 026.4184	DELEVAN	DROSSEL1025-44	
L44	LD 10 UH 10% 3R3 144 MA CHOKE	LD 026.4184	DELEVAN	DROSSEL1025-44	
L45	LD 10 UH 10% 3R3 144 MA CHOKE	LD 026.4184	DELEVAN	DROSSEL1025-44	
L70	LD 150 UH10%15,00HMO,061A CHOKE	LD 067.3124	DELEVAN	DROSSEL1025-72	
L71	LD 150 UH10%15,00HMO,061A CHOKE	LD 067.3124	DELEVAN	DROSSEL1025-72	
L72	LD 10 UH 10% 3R3 144 MA CHOKE	LD 026.4184	DELEVAN	DROSSEL1025-44	
L80	LD 150 UH10%15,00HMO,061A CHOKE	LD 067.3124	DELEVAN	DROSSEL1025-72	
L81	LD 150 UH10%15,00HMO,061A CHOKE	LD 067.3124	DELEVAN	DROSSEL1025-72	
L90	LD 10 UH 10% 3R3 144 MA CHOKE	LD 026.4184	DELEVAN	DROSSEL1025-44	
L91	LD 10 UH 10% 3R3 144 MA CHOKE	LD 026.4184	DELEVAN	DROSSEL1025-44	
L100	LD 10 UH 10% 3R3 144 MA CHOKE	LD 026.4184	DELEVAN	DROSSEL1025-44	
L101	LD 10 UH 10% 3R3 144 MA CHOKE	LD 026.4184	DELEVAN	DROSSEL1025-44	
L150	LD 10 UH 10% 3R3 144 MA CHOKE	LD 026.4184	DELEVAN	DROSSEL1025-44	
L151	LD 10 UH 10% 3R3 144 MA CHOKE	LD 026.4184	DELEVAN	DROSSEL1025-44	
L152	LD 10 UH 10% 3R3 144 MA CHOKE	LD 026.4184	DELEVAN	DROSSEL1025-44	
L153	LD 10 UH 10% 3R3 144 MA CHOKE	LD 026.4184	DELEVAN	DROSSEL1025-44	
L155	LD 10 UH 10% 3R3 144 MA CHOKE	LD 026.4184	DELEVAN	DROSSEL1025-44	
L156	LD UKW-DR.Z=750 OHM 50MHZ CHOKE	LD 026.4578	VALVO	431202036641	

Für diese Unterlage behalten wir uns alle Rechte vor

Kennz. Comp.No.	Benennung Designation	Sachnummer Stock No.	Hersteller Manufacturer	Bezeichnung Designation	enthalten in contained in
L157	LD 1,20UH10%0,180HM0,620A CHOKE	LD 067.2870	DELEVAN	DROSSEL1025-22	
L158	LD 10 UH 10% 3R3 144 MA CHOKE	LD 026.4184	DELEVAN	DROSSEL1025-44	
L159	LD 10 UH 10% 3R3 144 MA CHOKE	LD 026.4184	DELEVAN	DROSSEL1025-44	
L200	LD 10 UH 10% 3R3 144 MA CHOKE	LD 026.4184	DELEVAN	DROSSEL1025-44	
L201	LD 10 UH 10% 3R3 144 MA CHOKE	LD 026.4184	DELEVAN	DROSSEL1025-44	
L210	LD 100 UH10%8,000HM0,084A CHOKE	LD 067.3101	DELEVAN	DROSSEL1025-68	
L220	LD 10 UH 10% 3R3 144 MA CHOKE	LD 026.4184	DELEVAN	DROSSEL1025-44	
L300	LD UKW-DR.Z=750 OHM 50MHZ CHOKE	LD 026.4578	VALVO	431202036641	
L301	LD 3,90UH10%1,000HM0,263A CHOKE	LD 067.2934	DELEVAN	DROSSEL1025-34	
L302	LD 4,70UH10%1,200HM0,239A CHOKE	LD 067.2940	DELEVAN	DROSSEL1025-36	
L304	LD 10 UH 10% 3R3 144 MA CHOKE	LD 026.4184	DELEVAN	DROSSEL1025-44	
L305	LD 10 UH 10% 3R3 144 MA CHOKE	LD 026.4184	DELEVAN	DROSSEL1025-44	
L310	LF ROHRK.RD3,6XRD1,2XL3,3 TUBULAR CORE	LF 026.9286			
L330	LD 1,20UH10%0,180HM0,620A CHOKE	LD 067.2870	DELEVAN	DROSSEL1025-22	
L345	LD 10 UH 10% 3R3 144 MA CHOKE	LD 026.4184	DELEVAN	DROSSEL1025-44	
L370	LD 33,0UH10%3,400HM0,130A CHOKE	LD 067.3047	DELEVAN	DROSSEL 1025-56	
L371	LD 33,0UH10%3,400HM0,130A CHOKE	LD 067.3047	DELEVAN	DROSSEL 1025-56	
L375	LD 1,20UH10%0,180HM0,620A CHOKE	LD 067.2870	DELEVAN	DROSSEL1025-22	
L380	LD 150 UH10%15,00HM0,061A CHOKE	LD 067.3124	DELEVAN	DROSSEL1025-72	
L381	LD 150 UH10%15,00HM0,061A CHOKE	LD 067.3124	DELEVAN	DROSSEL1025-72	
L400	LD 100 UH10%8,000HM0,084A CHOKE	LD 067.3101	DELEVAN	DROSSEL1025-68	
L401	LD 10 UH 10% 3R3 144 MA CHOKE	LD 026.4184	DELEVAN	DROSSEL1025-44	
L500	OSZILLATORSPULE COIL	807.4215			
L600	OSZILLATORSPULE COIL	807.4215			
L800	LD 10 UH 10% 3R3 144 MA CHOKE	LD 026.4184	DELEVAN	DROSSEL1025-44	
L805	LD 10 UH 10% 3R3 144 MA CHOKE	LD 026.4184	DELEVAN	DROSSEL1025-44	
N20	BM OM345 ANTENNENVERST ANTENNA AMPLIFIER	BM 285.1596	VALVO	OM345	
N30	BM OM345 ANTENNENVERST ANTENNA AMPLIFIER	BM 285.1596	VALVO	OM345	
N40	BM SRA1 MIXER 0.5GHZ MIXER	BM 207.3465	MINICIRCUI	SRA1	
N80	BO SE5534AFE LOW N.OPAMP OPERATIONAL AMPLIFIER	BO 301.3335	SIGNETICS	SE5534AFE	
N81	BO LM124J 4XL.P.OPAMP OPERATIONAL AMPLIFIER	300.6353	NSC	LM124J	
N82	BO SE5534AFE LOW N.OPAMP OPERATIONAL AMPLIFIER	BO 301.3335	SIGNETICS	SE5534AFE	
N100	BO OP07CZ PREC. OPAMP OPERATIONAL AMPLIFIER	BO 303.6960	PMI	OP07CZ	
N105	BO MC1558JG 2X OPAMP OPERATIONAL AMPLIFIER	275.0816	NSC	LM1558J	
N110	BO LM339N 4X COMPAR COMPARATOR	BO 342.2062	NSC	LM339N	
N120	BO LM339N 4X COMPAR COMPARATOR	BO 342.2062	NSC	LM339N	
N300	BM OM345 ANTENNENVERST ANTENNA AMPLIFIER	BM 285.1596	VALVO	OM345	
N310	BL MC10116L 3XL. RECEIV LINE RECEIVER	BL 282.3275	MOTOROLA	MC10116L	

Kennz. Comp.No.	Benennung Designation	Sachnummer Stock No.	Hersteller Manufacturer	Bezeichnung Designation	enthalten in contained in
N380	BO SE5534AFE LOW N.OPAMP OPERATIONAL AMPLIFIER	BO 301.3335	SIGNETICS	SE5534AFE	
P40	VL WIRE-WRAP PIN WIRE-WRAP PIN	VL 088.4507	BERG	NR. 75 403-001	
P80	VL WIRE-WRAP PIN WIRE-WRAP PIN	VL 088.4507	BERG	NR. 75 403-001	
R1	RL 0,35W 243 OHM+-1%TK50 DEPOS.-CARBON RESISTOR	RL 083.0126	DRALORIC	SMA0207/243OHM-F-D	
R3	RL 0,35W16,20 OHM+-1%TK50 RESISTOR	RL 082.9059	DRALORIC	SMA0207/16,20HM-F-D	
R4	RL 0,35W16,20 OHM+-1%TK50 RESISTOR	RL 082.9059	DRALORIC	SMA0207/16,20HM-F-D	
R5	RL 0,35W 68,1 OHM+-1%TK50 RESISTOR	RL 082.9636	DRALORIC	SMA0207/68,10HM-F-D	
R6	RL 0,35W 287 OHM+-1% TK50 RESISTOR	RL 083.0190	DRALORIC	SMA0207/287OHM-F-D	
R7	RS 0,5W 2KOHM+-20%KURVE1 DEPOS.-CARBON POTENTIOMET	RS 069.8046	BOURNS	3329H-1-202	
R8	RL 0,35W 47,5 OHM+-1%TK50 RESISTOR	RL 082.9507	DRALORIC	SMA0207/47,50HM-F-D	
R9	RL 0,35W 100 OHM+-1%TK50 METALFILM-RESISTOR	RL 082.6543	DRALORIC	SMA0207/100/HM-F-D	
R10	RL 0,35W 1KOHM+-1%TK50 RESISTOR	RL 082.2160	DRALORIC	SMA0207/1K-F-C	
R11	RL 0,35W 5,62KOHM+-1%TK50 RESISTOR	RL 082.2190	DRALORIC	SMA0207/5,62K-F-C	
R15	RL 0,35W 10,0KOHM+-1%TK50 RESISTOR	RL 083.1297	DRALORIC	SMA0207/10K-F-D	
R16	RL 0,35W 4,75KOHM+-1%TK50 RESISTOR	RL 083.1097	DRALORIC	SMA0207/4,75K-F-D	
R17	RL 0,35W 475 OHM+-1%TK50 RESISTOR	RL 083.0390	DRALORIC	SMA0207/475OHM-F-D	
R20	RL 0,35W 221 OHM+-1%TK50 RESISTOR	RL 083.0084	DRALORIC	SMA0207/221OHM-F-D	
R21	RL 0,35W 49,9 OHM+-1%TK50 RESISTOR	RL 082.9520	RESISTA	MK2	
R23	RL 0,35W 221 OHM+-1%TK50 RESISTOR	RL 083.0084	DRALORIC	SMA0207/221OHM-F-D	
R24	RL 0,35W 49,9 OHM+-1%TK50 RESISTOR	RL 082.9520	RESISTA	MK2	
R25	RL 0,35W 1,50KOHM+-1%TK50 RESISTOR	RL 083.0732	DRALORIC	SMA0207/1,50K-F-D	
R26	RL 0,35W 274 OHM+-1%TK50 RESISTOR	RL 083.0178	DRALORIC	SMA0207/274OHM-F-D	
R27	RL 0,35W 100 OHM+-1%TK50 METALFILM-RESISTOR	RL 082.6543	DRALORIC	SMA0207/100/HM-F-D	
R28	RL 0,35W 1KOHM+-1%TK50 RESISTOR	RL 082.2160	DRALORIC	SMA0207/1K-F-C	
R30	RL 0,35W 49,9 OHM+-1%TK50 RESISTOR	RL 082.9520	RESISTA	MK2	
R32	RL 0,35W 221 OHM+-1%TK50 RESISTOR	RL 083.0084	DRALORIC	SMA0207/221OHM-F-D	
R33	RL 0,35W 10,0 OHM+-1%TK50 RESISTOR	RL 082.8852	DRALORIC	SMA0207/100HM-F-D	
R34	RL 0,35W 10,0 OHM+-1%TK50 RESISTOR	RL 082.8852	DRALORIC	SMA0207/100HM-F-D	
R35	RL 0,35W 121 OHM+-1%TK50 RESISTOR	RL 082.9859	DRALORIC	SMA0207/121OHM-F-D	
R36	RL 0,35W 287 OHM+-1% TK50 RESISTOR	RL 083.0190	DRALORIC	SMA0207/287OHM-F-D	
R37	RL 0,35W 243 OHM+-1%TK50 DEPOS.-CARBON RESISTOR	RL 083.0126	DRALORIC	SMA0207/243OHM-F-D	
R38	RL 0,35W 82,5 OHM+-1%TK50 RESISTOR	RL 082.9707	DRALORIC	SMA0207/82,50HM-F-D	
R39	RL 0,35W 1,1KOHM+-1%TK50 RESISTOR	RL 082.2483	DRALORIC	SMA 0207/1,10K-F-C	
R40	RL 0,35W 95,3 OHM+-1%TK50 RESISTOR	RL 082.9765	DRALORIC	SMA0207/95,30HM-F-D	
R41	RL 0,21W 18 OHM2% UNGEW. RESISTOR	RL 092.5862	RESISTA	MK1 180HM 2% UNGEW.	
R42	RL 0,21W 15 OHM2% UNGEW. RESISTOR	RL 092.5856	RESISTA	MK1 150HM 2% UNGEW.	
R50	RL 0,35W 49,9 OHM+-1%TK50 RESISTOR	RL 082.9520	RESISTA	MK2	
R51	RL 0,35W 49,9 OHM+-1%TK50 RESISTOR	RL 082.9520	RESISTA	MK2	

Für diese Unterlage behalten wir uns alle Rechte vor

Kennz. Comp.No.	Benennung Designation	Sachnummer Stock No.	Hersteller Manufacturer	Bezeichnung Designation	enthalten in contained in
R52	RL 0,35W 1,50KOHM+-1%TK50 RESISTOR	RL 083.0732	DRALORIC	SMA0207/1,50K-F-D	
R53	RL 0,21W 180 OHM2% UNGEW. RESISTOR	RL 092.5985	RESISTA	MK1 180OHM 2% UNGEW.	
R54	RL 0,35W 392 OHM+-1%TK50 RESISTOR	RL 082.2183	DRALORIC	SMA0207/392K-F-C	
R55	RL 0,35W 182 OHM+-1%TK50 RESISTOR	RL 083.0010	DRALORIC	SMA0207/182OHM-F-D	
R56	RL 0,35W 182 OHM+-1%TK50 RESISTOR	RL 083.0010	DRALORIC	SMA0207/182OHM-F-D	
R57	RL 0,35W 100 OHM+-1%TK50 METALFILM-RESISTOR	RL 082.6543	DRALORIC	SMA0207/100/HM-F-D	
R58	RL 0,35W 2,74KOHM+-1%TK50 RESISTOR	RL 083.0926	DRALORIC	SMA0207/2,74K-F-D	
R59	RL 0,35W 1KOHM+-1%TK50 RESISTOR	RL 082.2160	DRALORIC	SMA0207/1K-F-C	
R60	RL 0,35W 221 OHM+-1%TK50 RESISTOR	RL 083.0084	DRALORIC	SMA0207/221OHM-F-D	
R70	RL 0,21W 475 OHM+-1%TK50 RESISTOR	RL 092.1409	RESISTA	MK1 475OHM 1% TK50	
R71	RL 0,21W 475 OHM+-1%TK50 RESISTOR	RL 092.1409	RESISTA	MK1 475OHM 1% TK50	
R72	RL 0,21W 100 OHM+-1%TK50 DEPOS.-CARBON RESISTOR	RL 092.1321	RESISTA	MK1 100OHM 1% TK50	
R73	RL 0,21W 475 OHM+-1%TK50 RESISTOR	RL 092.1409	RESISTA	MK1 475OHM 1% TK50	
R74	RL 0,21W 1,00KOHM+-1%TK50 RESISTOR	RL 092.1444	RESISTA	MK1 1K00 1% TK50	
R75	RL 0,21W 1,00KOHM+-1%TK50 RESISTOR	RL 092.1444	RESISTA	MK1 1K00 1% TK50	
R76	RL 0,21W 1,00KOHM+-1%TK50 RESISTOR	RL 092.1444	RESISTA	MK1 1K00 1% TK50	
R79	RL 0,21W 100 KOHM+-1%TK50 RESISTOR	RL 092.1680	RESISTA	MK1 100K 10% TK50	
R80	RL 0,21W 475 OHM+-1%TK50 RESISTOR	RL 092.1409	RESISTA	MK1 475OHM 1% TK50	
R81	RL 0,21W 1,00KOHM+-1%TK50 RESISTOR	RL 092.1444	RESISTA	MK1 1K00 1% TK50	
R82	RL 0,21W 475 OHM+-1%TK50 RESISTOR	RL 092.1409	RESISTA	MK1 475OHM 1% TK50	
R83	RL 0,21W 1,00KOHM+-1%TK50 RESISTOR	RL 092.1444	RESISTA	MK1 1K00 1% TK50	
R84	RL 0,21W 332 OHM+-1%TK50 RESISTOR	RL 092.1380	RESISTA	MK1 332OHM 1% TK50	
R85	RL 0,21W 10,0KOHM+-1%TK50 RESISTOR	RL 092.1567	RESISTA	MK1 10K0 1% TK50	
R86	RL 0,21W 681 OHM+-1%TK50 RESISTOR	RL 092.1421	RESISTA	MK1 681OHM 1% TK50	
R87	RL 0,21W 12,1KOHM+-1%TK50 RESISTOR	RL 092.1573	RESISTA	MK1 12K1 1% TK50	
R88	RL 0,21W 10,0KOHM+-1%TK50 RESISTOR	RL 092.1567	RESISTA	MK1 10K0 1% TK50	
R89	RL 0,21W 100 KOHM+-1%TK50 RESISTOR	RL 092.1680	RESISTA	MK1 100K 10% TK50	
R90	RL 0,21W 332 OHM+-1%TK50 RESISTOR	RL 092.1380	RESISTA	MK1 332OHM 1% TK50	
R91	RS 0,5W 500 OHM+-20%KURV1 DEPOS.-CARBON POTENTIOMET	RS 069.8023	BOURNS	3329H-1-501	
R92	RL 0,21W 511 OHM+-1%TK50 RESISTOR	092.0219	RESISTA	MK1	
R93	RL 0,21W 33,2 OHM+-1%TK50 RESISTOR	RL 092.1244	RESISTA	MK1 33,2OHM 1% TK50	
R94	RL 0,21W 3,92KOHM+-1%TK50 RESISTOR	RL 092.1515	RESISTA	MK1 3K92 1% TK50	
R101	RL 0,21W 1,00KOHM+-1%TK50 RESISTOR	RL 092.1444	RESISTA	MK1 1K00 1% TK50	
R102	RL 0,21W 1,50KOHM+-1%TK50 RESISTOR	RL 092.1467	RESISTA	MK1 1K5 1% TK50	
R103	RL 0,21W 10,0KOHM+-1%TK50 RESISTOR	RL 092.1567	RESISTA	MK1 10K0 1% TK50	
R104	RL 0,21W 13,0KOHM+-1%TK50 RESISTOR	092.0383	RESISTA	MK1	
R105	RS 0,5W 5KOHM+-20%KURVE1 DEPOS.-CARBON POTENTIOMET	RS 069.8052	BOURNS	3329H-1-502	
R106	RL 0,21W 11,0KOHM+-1%TK50 RESISTOR	092.0377	RESISTA	MK1 11K 1% TK50	
R109	RL 0,21W 1,00KOHM+-1%TK50 RESISTOR	RL 092.1444	RESISTA	MK1 1K00 1% TK50	

Kennz. Comp.No.	Benennung Designation	Sachnummer Stock No.	Hersteller Manufacturer	Bezeichnung Designation	enthalten in contained in
R110	RL 0,21W 4,75KOHM+-1%TK50 RESISTOR	RL 092.1521	RESISTA	MK1 4K75 1% TK50	
R111	RL 0,21W 4,75KOHM+-1%TK50 RESISTOR	RL 092.1521	RESISTA	MK1 4K75 1% TK50	
R112	RL 0,21W 1,00KOHM+-1%TK50 RESISTOR	RL 092.1444	RESISTA	MK1 1K00 1% TK50	
R113	RL 0,21W 1,00KOHM+-1%TK50 RESISTOR	RL 092.1444	RESISTA	MK1 1K00 1% TK50	
R114	RS 0,5W 200 OHM+-20%KURV1 DEPOS.-CARBON POTENTIOMET	RS 069.8017	BOURNS	3329H-1-201	
R115	RL 0,21W 47,5 OHM+-1%TK50 RESISTOR	RL 092.1267	RESISTA	MK1 47,50HM 1% TK50	
R116	RL 0,21W 47,5 OHM+-1%TK50 RESISTOR	RL 092.1267	RESISTA	MK1 47,50HM 1% TK50	
R117	RL 0,21W 182 OHM+-1%TK50 RESISTOR	RL 092.1350	RESISTA	MK1 1820HM 1% TK50	
R118	RL 0,21W 100 OHM+-1%TK50 DEPOS.-CARBON RESISTOR	RL 092.1321	RESISTA	MK1 1000HM 1% TK50	
R120	RL 0,21W 4,75KOHM+-1%TK50 RESISTOR	RL 092.1521	RESISTA	MK1 4K75 1% TK50	
R121	RL 0,21W 12,1KOHM+-1%TK50 RESISTOR	RL 092.1573	RESISTA	MK1 12K1 1% TK50	
R122	RL 0,21W 13,0KOHM+-1%TK50 RESISTOR	092.0383	RESISTA	MK1	
R123	RL 0,21W 1,00KOHM+-1%TK50 RESISTOR	RL 092.1444	RESISTA	MK1 1K00 1% TK50	
R125	RL 0,21W 2,21KOHM+-1%TK50 RESISTOR	RL 092.1480	RESISTA	MK1 2K21 1% TK50	
R126	RL 0,35W 332 OHM+-1%TK50 RESISTOR	RL 083.0255	DRALORIC	SMA0207/3320HM-F-D	
R130	RL 0,21W 10,0KOHM+-1%TK50 RESISTOR	RL 092.1567	RESISTA	MK1 10K0 1% TK50	
R131	RL 0,21W 10,0KOHM+-1%TK50 RESISTOR	RL 092.1567	RESISTA	MK1 10K0 1% TK50	
R132	RL 0,21W 20,0KOHM+-1%TK50 RESISTOR	092.0402	RESISTA	MK1 20K 1% TK50	
R133	RL 0,21W 20,0KOHM+-1%TK50 RESISTOR	092.0402	RESISTA	MK1 20K 1% TK50	
R134	RL 0,21W 10,0KOHM+-1%TK50 RESISTOR	RL 092.1567	RESISTA	MK1 10K0 1% TK50	
R135	RL 0,21W 15,0KOHM+-1%TK50 RESISTOR	RL 092.1580	RESISTA	MK1 15K 1% TK50	
R136	RL 0,21W 2,21KOHM+-1%TK50 RESISTOR	RL 092.1480	RESISTA	MK1 2K21 1% TK50	
R137	RL 0,35W 332 OHM+-1%TK50 RESISTOR	RL 083.0255	DRALORIC	SMA0207/3320HM-F-D	
R141	RL 0,21W 5,62KOHM+-1%TK50 RESISTOR	RL 092.1538	RESISTA	MK1 5K62 1% TK50	
R142	RL 0,21W 10,0KOHM+-1%TK50 RESISTOR	RL 092.1567	RESISTA	MK1 10K0 1% TK50	
R143	RL 0,21W 100 OHM+-1%TK50 DEPOS.-CARBON RESISTOR	RL 092.1321	RESISTA	MK1 1000HM 1% TK50	
R145	RL 0,21W 4,75KOHM+-1%TK50 RESISTOR	RL 092.1521	RESISTA	MK1 4K75 1% TK50	
R146	RL 0,21W 9,09KOHM+-1%TK50 RESISTOR	092.0360	RESISTA	MK1	
R147	RL 0,21W 562 OHM+-1%TK50 RESISTOR	RL 092.1415	RESISTA	MK1 5620HM 1% TK50	
R150	RL 0,35W 8,25KOHM+-1%TK50 RESISTOR	RL 083.1239	DRALORIC	SMA0207/8,25K-F-D	
R151	RL 0,35W 1KOHM+-1%TK50 RESISTOR	RL 082.2160	DRALORIC	SMA0207/1K-F-C	
R152	RL 0,35W 100 OHM+-1%TK50 METALFILM-RESISTOR	RL 082.6543	DRALORIC	SMA0207/100/HM-F-D	
R153	RL 0,35W 1KOHM+-1%TK50 RESISTOR	RL 082.2160	DRALORIC	SMA0207/1K-F-C	
R154	RL 0,35W 1KOHM+-1%TK50 RESISTOR	RL 082.2160	DRALORIC	SMA0207/1K-F-C	
R156	RL 0,35W 1KOHM+-1%TK50 RESISTOR	RL 082.2160	DRALORIC	SMA0207/1K-F-C	
R157	RL 0,35W 1KOHM+-1%TK50 RESISTOR	RL 082.2160	DRALORIC	SMA0207/1K-F-C	
R158	RL 0,35W 1KOHM+-1%TK50 RESISTOR	RL 082.2160	DRALORIC	SMA0207/1K-F-C	
R159	RL 0,35W 10,0 OHM+-1%TK50 RESISTOR	RL 082.8852	DRALORIC	SMA0207/100HM-F-D	
R200	RL 0,35W 100 OHM+-1%TK50 METALFILM-RESISTOR	RL 082.6543	DRALORIC	SMA0207/100/HM-F-D	

Für diese Unterlage behalten wir uns alle Rechte vor

Kennz. Comp.No.	Benennung Designation	Sachnummer Stock No.	Hersteller Manufacturer	Bezeichnung Designation	enthalten in contained in
R201	RL 0,35W 100 OHM+-1%TK50 METALFILM-RESISTOR	RL 082.6543	DRALORIC	SMA0207/100/HM-F-D	
R202	RL 0,35W 2,74KOHM+-1%TK50 RESISTOR	RL 083.0926	DRALORIC	SMA0207/2,74K-F-D	
R203	RL 0,35W 1KOHM+-1%TK50 RESISTOR	RL 082.2160	DRALORIC	SMA0207/1K-F-C	
R204	RL 0,35W 221 OHM+-1%TK50 RESISTOR	RL 083.0084	DRALORIC	SMA0207/221OHM-F-D	
R210	RL 0,21W 100 OHM2% UNGEW. RESISTOR	RL 092.5956	RESISTA	MK1 100OHM 2% UNGEW.	
R220	RL 0,21W 100 OHM2% UNGEW. RESISTOR	RL 092.5956	RESISTA	MK1 100OHM 2% UNGEW.	
R300	RL 0,35W 243 OHM+-1%TK50 DEPOS.-CARBON RESISTOR	RL 083.0126	DRALORIC	SMA0207/243OHM-F-D	
R302	RL 0,35W16,20 OHM+-1%TK50 RESISTOR	RL 082.9059	DRALORIC	SMA0207/16,2OHM-F-D	
R303	RL 0,35W 68,1 OHM+-1%TK50 RESISTOR	RL 082.9636	DRALORIC	SMA0207/68,1OHM-F-D	
R304	RL 0,35W16,20 OHM+-1%TK50 RESISTOR	RL 082.9059	DRALORIC	SMA0207/16,2OHM-F-D	
R305	RL 0,35W 5,62KOHM+-1%TK50 RESISTOR	RL 082.2190	DRALORIC	SMA0207/5,62K-F-C	
R306	RL 0,35W 1KOHM+-1%TK50 RESISTOR	RL 082.2160	DRALORIC	SMA0207/1K-F-C	
R307	RL 0,35W 100 OHM+-1%TK50 METALFILM-RESISTOR	RL 082.6543	DRALORIC	SMA0207/100/HM-F-D	
R308	RL 0,35W 47,5 OHM+-1%TK50 RESISTOR	RL 082.9507	DRALORIC	SMA0207/47,5OHM-F-D	
R309	RS 0,5W 2KOHM+-20%KURVE1 DEPOS.-CARBON POTENTIOMET	RS 069.8046	BOURNS	3329H-1-202	
R310	RL 0,35W 287 OHM+-1% TK50 RESISTOR	RL 083.0190	DRALORIC	SMA0207/287OHM-F-D	
R315	RL 0,35W 10,0KOHM+-1%TK50 RESISTOR	RL 083.1297	DRALORIC	SMA0207/10K-F-D	
R316	RL 0,35W 4,75KOHM+-1%TK50 RESISTOR	RL 083.1097	DRALORIC	SMA0207/4,75K-F-D	
R317	RL 0,35W 475 OHM+-1%TK50 RESISTOR	RL 083.0390	DRALORIC	SMA0207/475OHM-F-D	
R320	RL 0,35W 221 OHM+-1%TK50 RESISTOR	RL 083.0084	DRALORIC	SMA0207/221OHM-F-D	
R321	RL 0,35W 49,9 OHM+-1%TK50 RESISTOR	RL 082.9520	RESISTA	MK2	
R323	RL 0,35W 221 OHM+-1%TK50 RESISTOR	RL 083.0084	DRALORIC	SMA0207/221OHM-F-D	
R324	RL 0,35W27,40 OHM+-1%TK50 RESISTOR	RL 082.9271	DRALORIC	SMA0207/27,4OHM-F-D	
R325	RL 0,35W 33,2 OHM+-1%TK50 RESISTOR	RL 082.9359	DRALORIC	SMA0207/33,2OHM-F-D	
R326	RL 0,35W27,40 OHM+-1%TK50 RESISTOR	RL 082.9271	DRALORIC	SMA0207/27,4OHM-F-D	
R330	RL 0,35W 100 OHM+-1%TK50 METALFILM-RESISTOR	RL 082.6543	DRALORIC	SMA0207/100/HM-F-D	
R331	RL 0,35W 1KOHM+-1%TK50 RESISTOR	RL 082.2160	DRALORIC	SMA0207/1K-F-C	
R332	RL 0,35W 1KOHM+-1%TK50 RESISTOR	RL 082.2160	DRALORIC	SMA0207/1K-F-C	
R333	RL 0,35W 511 OHM+-1%TK50 RESISTOR	RL 083.0426	DRALORIC	SMA0207/511OHM-F-D	
R340	RL 0,21W 274 OHM+-1%TK50 RESISTOR	RL 092.1373	RESISTA	MK1 274OHM 1% TK50	
R341	RL 0,21W 1,50KOHM+-1%TK50 RESISTOR	RL 092.1467	RESISTA	MK1 1K5 1% TK50	
R342	RL 0,21W 100 OHM+-1%TK50 DEPOS.-CARBON RESISTOR	RL 092.1321	RESISTA	MK1 100OHM 1% TK50	
R350	RL 0,21W 162 OHM+-1%TK50 RESISTOR	092.0154			
R351	RL 0,21W 267 OHM+-1%TK50 RESISTOR	092.4520	RESISTA	MK1 267 1% TK50	
R352	RL 0,21W 1,00KOHM+-1%TK50 RESISTOR	RL 092.1444	RESISTA	MK1 1K00 1% TK50	
R353	RL 0,21W 511 OHM+-1%TK50 RESISTOR	092.0219	RESISTA	MK1	
R354	RL 0,21W 1,00KOHM+-1%TK50 RESISTOR	RL 092.1444	RESISTA	MK1 1K00 1% TK50	
R355	RL 0,21W 267 OHM+-1%TK50 RESISTOR	092.4520	RESISTA	MK1 267 1% TK50	
R356	RL 0,21W 162 OHM+-1%TK50 RESISTOR	092.0154			

Kennz. Comp.No.	Benennung Designation	Sachnummer Stock No.	Hersteller Manufacturer	Bezeichnung Designation	enthalten in contained in
R357	RL 0,21W 681 OHM+-1%TK50 RESISTOR	RL 092.1421	RESISTA	MK1 681OHM 1% TK50	
R358	RL 0,21W 120 OHM2% UNGEW. RESISTOR	RL 092.5962	RESISTA	MK1 120OHM 2% UNGEW.	
R360	RL 0,21W 22,1 OHM+-1%TK50 RESISTOR	RL 092.1221	RESISTA	MK1 22,1OHM 1% TK50	
R361	RL 0,21W 511 OHM+-1%TK50 RESISTOR	092.0219	RESISTA	MK1	
R362	RL 0,21W 511 OHM+-1%TK50 RESISTOR	092.0219	RESISTA	MK1	
R363	RL 0,21W 1,00KOHM+-1%TK50 RESISTOR	RL 092.1444	RESISTA	MK1 1K00 1% TK50	
R364	RL 0,21W 1,00KOHM+-1%TK50 RESISTOR	RL 092.1444	RESISTA	MK1 1K00 1% TK50	
R370	RL 0,21W 100 OHM+-1%TK50 DEPOS.-CARBON RESISTOR	RL 092.1321	RESISTA	MK1 100OHM 1% TK50	
R371	RL 0,21W 221 OHM+-1%TK50 RESISTOR	RL 092.1367	RESISTA	MK1 221OHM 1% TK50	
R372	RL 0,21W 475 OHM+-1%TK50 RESISTOR	RL 092.1409	RESISTA	MK1 475OHM 1% TK50	
R373	RL 0,21W 221 OHM+-1%TK50 RESISTOR	RL 092.1367	RESISTA	MK1 221OHM 1% TK50	
R380	RL 0,21W 221 OHM+-1%TK50 RESISTOR	RL 092.1367	RESISTA	MK1 221OHM 1% TK50	
R381	RL 0,21W 475 OHM+-1%TK50 RESISTOR	RL 092.1409	RESISTA	MK1 475OHM 1% TK50	
R382	RL 0,21W 221 OHM+-1%TK50 RESISTOR	RL 092.1367	RESISTA	MK1 221OHM 1% TK50	
R383	RL 0,21W 475 OHM+-1%TK50 RESISTOR	RL 092.1409	RESISTA	MK1 475OHM 1% TK50	
R384	RL 0,21W 332 OHM+-1%TK50 RESISTOR	RL 092.1380	RESISTA	MK1 332OHM 1% TK50	
R385	RS 0,5W 200 OHM+-20%KURV1 DEPOS.-CARBON POTENTIOMET	RS 069.8017	BOURNS	3329H-1-201	
R386	RL 0,21W 130 OHM+-1%TK50 RESISTOR	092.0148	RESISTA	MK1	
R387	RL 0,21W 10,0KOHM+-1%TK50 RESISTOR	RL 092.1567	RESISTA	MK1 10K0 1% TK50	
R388	RL 0,21W 1,00KOHM+-1%TK50 RESISTOR	RL 092.1444	RESISTA	MK1 1K00 1% TK50	
R395	RL 0,35W 4,75KOHM+-1%TK50 RESISTOR	RL 083.1097	DRALORIC	SMA0207/4,75K-F-D	
R400	RL 0,35W27,40 OHM+-1%TK50 RESISTOR	RL 082.9271	DRALORIC	SMA0207/27,4OHM-F-D	
R401	RL 0,35W27,40 OHM+-1%TK50 RESISTOR	RL 082.9271	DRALORIC	SMA0207/27,4OHM-F-D	
R402	RL 0,35W 1KOHM+-1%TK50 RESISTOR	RL 082.2160	DRALORIC	SMA0207/1K-F-C	
R403	RL 0,35W 2,74KOHM+-1%TK50 RESISTOR	RL 083.0926	DRALORIC	SMA0207/2,74K-F-D	
R404	RL 0,35W 221 OHM+-1%TK50 RESISTOR	RL 083.0084	DRALORIC	SMA0207/221OHM-F-D	
R405	RL 0,35W 100 OHM+-1%TK50 METALFILM-RESISTOR	RL 082.6543	DRALORIC	SMA0207/100/HM-F-D	
R406	RL 0,35W 2,74KOHM+-1%TK50 RESISTOR	RL 083.0926	DRALORIC	SMA0207/2,74K-F-D	
R407	RL 0,35W 1KOHM+-1%TK50 RESISTOR	RL 082.2160	DRALORIC	SMA0207/1K-F-C	
R408	RL 0,35W 221 OHM+-1%TK50 RESISTOR	RL 083.0084	DRALORIC	SMA0207/221OHM-F-D	
R550	RL 0,21W 200 KOHM+-1%TK50 RESISTOR	092.0531	RESISTA	MK1 200K 1% TK50	
R551	RL 0,21W 200 KOHM+-1%TK50 RESISTOR	092.0531	RESISTA	MK1 200K 1% TK50	
R552	RL 0,21W 10,0KOHM+-1%TK50 RESISTOR	RL 092.1567	RESISTA	MK1 10K0 1% TK50	
R560	RL 0,21W 100 KOHM+-1%TK50 RESISTOR	RL 092.1680	RESISTA	MK1 100K 10% TK50	
R561	RL 0,21W 10,0KOHM+-1%TK50 RESISTOR	RL 092.1567	RESISTA	MK1 10K0 1% TK50	
R570	RL 0,21W 100 KOHM+-1%TK50 RESISTOR	RL 092.1680	RESISTA	MK1 100K 10% TK50	
R571	RL 0,21W 10,0KOHM+-1%TK50 RESISTOR	RL 092.1567	RESISTA	MK1 10K0 1% TK50	
R580	RL 0,35W 1KOHM+-1%TK50 RESISTOR	RL 082.2160	DRALORIC	SMA0207/1K-F-C	
R581	RL 0,35W 1KOHM+-1%TK50 RESISTOR	RL 082.2160	DRALORIC	SMA0207/1K-F-C	

Für diese Unterlage behalten wir uns alle Rechte vor

Kennz. Comp.No.	Benennung Designation	Sachnummer Stock No.	Hersteller Manufacturer	Bezeichnung Designation	enthalten in contained in
R582	RL 0,35W 1KOHM+-1%TK50 RESISTOR	RL 082.2160	DRALORIC	SMA0207/1K-F-C	
T20	LU UEBERTRAGER TRANSFORMER	807.4067			
T320	LU UEBERTRAGER TRANSFORMER	807.4067			
V1	AE BB909B 25/ 3PF CDI TUNING DIODE	AE 092.9600	VALVO	BB909B	
V2	AE BB909B 25/ 3PF CDI TUNING DIODE	AE 092.9600	VALVO	BB909B	
V3 ..6	AE BB909B 25/ 3PF CDI TUNING DIODE	AE 092.9600	VALVO	BB909B	
V7	AE BB909B 25/ 3PF CDI TUNING DIODE	AE 092.9600	VALVO	BB909B	
V8	AE BB909B 25/ 3PF CDI TUNING DIODE	AE 092.9600	VALVO	BB909B	
V9	AE 5082-2800 SCHOTTKY DIODE	AE 012.9066	HEWLETT-P.	5082-2800	
V10	AM U310 N-D 25V JFET FET	AM 454.6217	SILICONIX	U310	
V11	AM U310 N-D 25V JFET FET	AM 454.6217	SILICONIX	U310	
V12	AK BCY79IX P 45V 200MA TRANSISTOR	AK 010.3777	VALVO	BCY79IX	
V20	AE 5082-2800 SCHOTTKY DIODE	AE 012.9066	HEWLETT-P.	5082-2800	
V21	AK BFR96 N 15V 75MA TRANSISTOR	AK 093.2738	VALVO	BFR96	
V30	AK BFR96 N 15V 75MA TRANSISTOR	AK 093.2738	VALVO	BFR96	
V40	AK BFT66 N 15V 30MA TRANSISTOR	AK 252.5728	SIEMENS	BFT66	
V41	AK 2N2369A N 15V 200MA TRANSISTOR	AK 010.4680	VALVO	2N2369A	
V42	AK 2N2369A N 15V 200MA TRANSISTOR	AK 010.4680	VALVO	2N2369A	
V80	AD 1N4448 75V 0A15 UDI DIODE	AD 012.0700	TEXAS INST	1N4448 GEGURTET	
V81	AE BZX79/C13 0,5W ZDI ZENER DIODE	AE 012.2549	VALVO	BZX79/C13	
V82	AE BZX79/C13 0,5W ZDI ZENER DIODE	AE 012.2549	VALVO	BZX79/C13	
V90	AK BCY59IX N 45V 200MA TRANSISTOR	AK 010.5163	VALVO	BCY59IX	
V91	AK BCY79IX P 45V 200MA TRANSISTOR	AK 010.3777	VALVO	BCY79IX	
V92 ..95	AD 1N4448 75V 0A15 UDI DIODE	AD 012.0700	TEXAS INST	1N4448 GEGURTET	
V140	AL BDX77 NPN 80V 8A0 TRANSISTOR	AL 300.6318	VALVO	BDX77	
V200	AK 2N2369A N 15V 200MA TRANSISTOR	AK 010.4680	VALVO	2N2369A	
V220	AK 2N2369A N 15V 200MA TRANSISTOR	AK 010.4680	VALVO	2N2369A	
V300	AE BB909B 25/ 3PF CDI TUNING DIODE	AE 092.9600	VALVO	BB909B	
V301	AE BB909B 25/ 3PF CDI TUNING DIODE	AE 092.9600	VALVO	BB909B	
V302 ..305	AE BB909B 25/ 3PF CDI TUNING DIODE	AE 092.9600	VALVO	BB909B	
V306	AE BB909B 25/ 3PF CDI TUNING DIODE	AE 092.9600	VALVO	BB909B	
V307	AE BB909B 25/ 3PF CDI TUNING DIODE	AE 092.9600	VALVO	BB909B	
V308	AE 5082-2800 SCHOTTKY DIODE	AE 012.9066	HEWLETT-P.	5082-2800	
V309	AM U310 N-D 25V JFET FET	AM 454.6217	SILICONIX	U310	
V310	AM U310 N-D 25V JFET FET	AM 454.6217	SILICONIX	U310	
V311	AK BCY79IX P 45V 200MA TRANSISTOR	AK 010.3777	VALVO	BCY79IX	
V341	AK BFR96 N 15V 75MA TRANSISTOR	AK 093.2738	VALVO	BFR96	
V342	AK BFQ24 P 12V 35MA TRANSISTOR	252.2635	VALVO	BFQ24	

Kennz. Comp.No.	Benennung Designation	Sachnummer Stock No.	Hersteller Manufacturer	Bezeichnung Designation	enthalten in contained in
V343	AE 5082-2800 SCHOTTKY DIODE	AE 012.9066	HEWLETT-P.	5082-2800	
V344	AD 1N4448 75V 0A15 UDI DIODE	AD 012.0700	TEXAS INST	1N4448 GEGURTET	
V345	AD 1N4448 75V 0A15 UDI DIODE	AD 012.0700	TEXAS INST	1N4448 GEGURTET	
V346	AE 5082-2800 SCHOTTKY DIODE	AE 012.9066	HEWLETT-P.	5082-2800	
V380	AE BZX79/C12 0,5W ZDI ZENER DIODE	AE 012.2532	VALVO	BZX55/C12 BZX79...	
V384	AD 1N4448 75V 0A15 UDI DIODE	AD 012.0700	TEXAS INST	1N4448 GEGURTET	
V385	AD 1N4448 75V 0A15 UDI DIODE	AD 012.0700	TEXAS INST	1N4448 GEGURTET	
V387	AD 1N4448 75V 0A15 UDI DIODE	AD 012.0700	TEXAS INST	1N4448 GEGURTET	
V388	AD 1N4448 75V 0A15 UDI DIODE	AD 012.0700	TEXAS INST	1N4448 GEGURTET	
V400	AK 2N2369A N 15V 200MA TRANSISTOR	AK 010.4680	VALVO	2N2369A	
V401	AK 2N2369A N 15V 200MA TRANSISTOR	AK 010.4680	VALVO	2N2369A	
W70	DX KABEL W70 CABLE W70	807.4238			
X1	FJ EINBAUWINKELST. SMC ANGLE CONNECTOR	FJ 249.9684	RADIALL	R 112 669	
X3	FJ EINBAUWINKELST. SMC ANGLE CONNECTOR	FJ 249.9684	RADIALL	R 112 669	
X8	FJ EINBAUWINKELST. SMC ANGLE CONNECTOR	FJ 249.9684	RADIALL	R 112 669	
X10	FP IND.STECKERLEISTE 64 P MALE MULTIPOINT CONNECTOR	FP 273.0490	PANDUIT	100-964-C33/999	
X21	FP KURZSCHL.BUCHSE OFFEN SHORTING PLUG	FP 342.1895	BERG	76264-101	
X31	FP KURZSCHL.BUCHSE OFFEN SHORTING PLUG	FP 342.1895	BERG	76264-101	
X33	FP KURZSCHL.BUCHSE OFFEN SHORTING PLUG	FP 342.1895	BERG	76264-101	
X35	FP KURZSCHL.BUCHSE OFFEN SHORTING PLUG	FP 342.1895	BERG	76264-101	
X39	FP KURZSCHL.BUCHSE OFFEN SHORTING PLUG	FP 342.1895	BERG	76264-101	
X81	FP KURZSCHL.BUCHSE OFFEN SHORTING PLUG	FP 342.1895	BERG	76264-101	
X91	FP KURZSCHL.BUCHSE OFFEN SHORTING PLUG	FP 342.1895	BERG	76264-101	
X93	FP KURZSCHL.BUCHSE OFFEN SHORTING PLUG	FP 342.1895	BERG	76264-101	
X97	FP KURZSCHL.BUCHSE OFFEN SHORTING PLUG	FP 342.1895	BERG	76264-101	
X110	FP KURZSCHL.BUCHSE OFFEN SHORTING PLUG	FP 342.1895	BERG	76264-101	
X110	FP INDIREKT.STECKERL.36P. PIN CONNECTOR 4-POLIG	FP 242.3600	BINDER	742-5-11-0178-00-36	F
X143	VL WIRE-WRAP PIN WIRE-WRAP PIN	VL 088.4542	BERG	NR. 75 403-003	
X210	VL WIRE-WRAP PIN WIRE-WRAP PIN	VL 088.4542	BERG	NR. 75 403-003	
X310	FP KURZSCHL.BUCHSE OFFEN SHORTING PLUG	FP 342.1895	BERG	76264-101	
X310	FP INDIREKT.STECKERL.36P. PIN CONNECTOR 4-POLIG	FP 242.3600	BINDER	742-5-11-0178-00-36	F
X345	VL WIRE-WRAP PIN WIRE-WRAP PIN	VL 088.4542	BERG	NR. 75 403-003	
X20A	VL WIRE-WRAP PIN WIRE-WRAP PIN	VL 088.4507	BERG	NR. 75 403-001	
X20B	VL WIRE-WRAP PIN WIRE-WRAP PIN	VL 088.4507	BERG	NR. 75 403-001	
X20C	VL WIRE-WRAP PIN WIRE-WRAP PIN	VL 088.4507	BERG	NR. 75 403-001	
X20D	VL WIRE-WRAP PIN WIRE-WRAP PIN	VL 088.4507	BERG	NR. 75 403-001	
X30A	VL WIRE-WRAP PIN WIRE-WRAP PIN	VL 088.4507	BERG	NR. 75 403-001	

Für diese Unterlage behalten wir uns alle Rechte vor

Kennz. Comp.No.	Benennung Designation	Sachnummer Stock No.	Hersteller Manufacturer	Bezeichnung Designation	enthalten in contained in
X30B	VL WIRE-WRAP PIN WIRE-WRAP PIN	VL 088.4507	BERG	NR. 75 403-001	
X30C	VL WIRE-WRAP PIN WIRE-WRAP PIN	VL 088.4507	BERG	NR. 75 403-001	
X30D	VL WIRE-WRAP PIN WIRE-WRAP PIN	VL 088.4507	BERG	NR. 75 403-001	
X32A	VL WIRE-WRAP PIN WIRE-WRAP PIN	VL 088.4507	BERG	NR. 75 403-001	
X32B	VL WIRE-WRAP PIN WIRE-WRAP PIN	VL 088.4507	BERG	NR. 75 403-001	
X32C	VL WIRE-WRAP PIN WIRE-WRAP PIN	VL 088.4507	BERG	NR. 75 403-001	
X32D	VL WIRE-WRAP PIN WIRE-WRAP PIN	VL 088.4507	BERG	NR. 75 403-001	
X34A	VL WIRE-WRAP PIN WIRE-WRAP PIN	VL 088.4507	BERG	NR. 75 403-001	
X34B	VL WIRE-WRAP PIN WIRE-WRAP PIN	VL 088.4507	BERG	NR. 75 403-001	
X38A	VL WIRE-WRAP PIN WIRE-WRAP PIN	VL 088.4507	BERG	NR. 75 403-001	
X38B	VL WIRE-WRAP PIN WIRE-WRAP PIN	VL 088.4507	BERG	NR. 75 403-001	
X80A	VL WIRE-WRAP PIN WIRE-WRAP PIN	VL 088.4507	BERG	NR. 75 403-001	
X80B	VL WIRE-WRAP PIN WIRE-WRAP PIN	VL 088.4507	BERG	NR. 75 403-001	
X90A	VL WIRE-WRAP PIN WIRE-WRAP PIN	VL 088.4507	BERG	NR. 75 403-001	
X90B	VL WIRE-WRAP PIN WIRE-WRAP PIN	VL 088.4507	BERG	NR. 75 403-001	
X90C	VL WIRE-WRAP PIN WIRE-WRAP PIN	VL 088.4507	BERG	NR. 75 403-001	
X94A	VL WIRE-WRAP PIN WIRE-WRAP PIN	VL 088.4507	BERG	NR. 75 403-001	
X94B	VL WIRE-WRAP PIN WIRE-WRAP PIN	VL 088.4507	BERG	NR. 75 403-001	
X94C	VL WIRE-WRAP PIN WIRE-WRAP PIN	VL 088.4507	BERG	NR. 75 403-001	
X95A	VL WIRE-WRAP PIN WIRE-WRAP PIN	VL 088.4507	BERG	NR. 75 403-001	
X95B	VL WIRE-WRAP PIN WIRE-WRAP PIN	VL 088.4507	BERG	NR. 75 403-001	
					- ENDE -

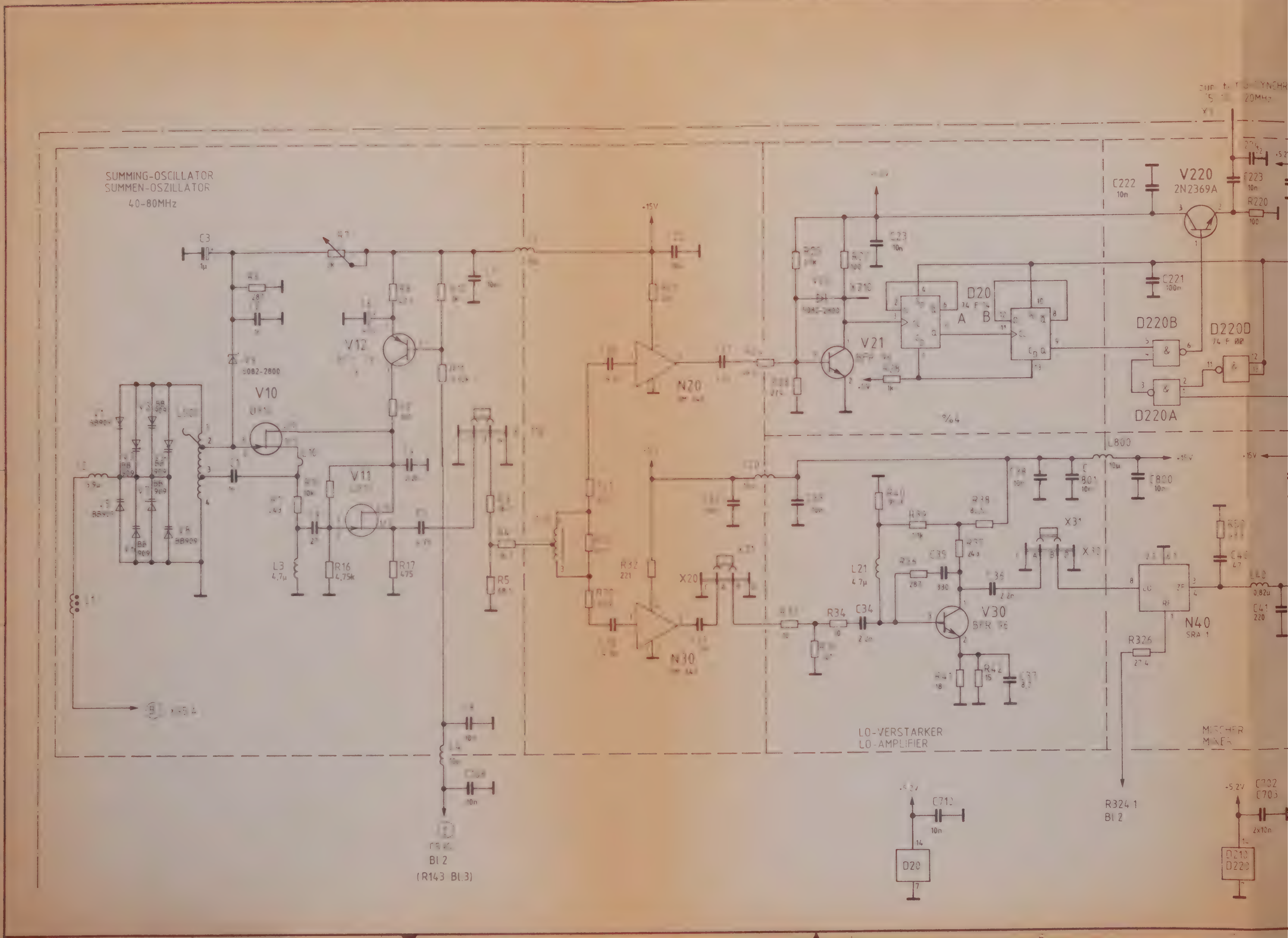
SUMMING-OSCILLATOR
SUMMEN-OSZILLATOR
40-80MHz
V10
V11
V12
L3
4,7µ
R16
4,75k
R17
475
R5
C3
N20
N30
X20
V21
D20
A
B
V220
2N2369A
C222
10n
C223
R220
C221
D220B
D220D
74 F 00
D220A
L800
C800
10n
C801
L21
4,7µ
R34
C34
V30
BFR 96
R38
R39
R36
C35
X31
X32
N40
SRA 1
R326
LO-VERSTARKER
LO-AMPLIFIER
MISCHER
MIXER
R324.1
Bl 2
C712
10n
D20
14
7
Bl 2
(R143 Bl.3)
-5,2V
C702
C703
2x10n
D210
D220

NISATION

vom/from SWEEPSYNTHESIZER
(5) 10.....20MHz
X3

L220 10µ +5,2V
C220 10n
C210 10n
R210 100
D210C 74 F 00
D210B
D210A
C208 100n
L210 100µ
C207 100n
R155 Bl.3
I70
I71
W70
I20
I200
R74 3x1k
R75
R76
+5V
D71 74 HC 161
CLR
LOAD
ENP
ENT
CK
A
B
C
D
QC
C204 10n +5,2V
L201 10µ
C201 10n
R204 221
V200 2N2369A
R202 2,74k
R200 100
C200 10n
R203 1k
R201 100
L70 150µ
D70A 74 HC 74
S
D
CK
R
Q
R71 475
C73 680
D72A 74 HC 74
R70 475
L43 10µ +15V
C47 10n
C48 10n
+15V
C49 47n
C50 10n
L44 10µ +5V
R60 221
R52 1,5k
V40 BFT 66
V41 2N2369 A
R58 2,74k
V42 2N2369A
P40
L41 1,5µ
L42 0,82µ
C52 470n
R51 49,9
C42 220
C43 220
C44 220
C45 10
R53 180
R54 392
C46 470n
R57 100
R55 182
R56 182
R59 1k
+15V
L45 10µ
C51 10n
C70 10n
+15V
ZF-VERSTÄRKER
IF-AMPLIFIER
PHASEDETECTOR II
PHASENDETEKTOR II
D70 B
R72 100
R73 475
L71 150µ
C74 680
+5,2V
C72 10µ
C71 10n
C72 10n
+5,2V N81.2 Bl.3
+5,2V
C730 10n
D71
C711,C701 2x10n
D70 D72
+5,2V
C202 10n
200 10µ
+5,2V N81.2 Bl.3
C203 10n
X81
X80
V80 1N4448
R86 221
FANGSCHALTUNG
R82 475
C82 680
+15V
C84 100n
R83 1k
C83 1µ
R88 10k
+15V
N81B µM 124
R89 100k
-15V
C91 470n
R80 475
C80 680
R81 1k
C81 1µ
N80 SE 5534 A
C86 2,7
C85 100n
R79 100k
-15V
P80
R550 200k
R551 200k
+15V
R582 Bl.3
R552 10k
C550 10n
R85 10k
R84 332
C87 1n
C88 120
L80 150µ
C89 1,8n
L81 150µ
C90 1n
+15V
C94 100n
N82 SE 5534 A
R90 332
C92 2,7
C93 100n
-15V
R92 511
R91 500
X93
X94
R93 33,2
V82
V81
2xBZX79/C13
R94 3,92k
INTEGRATOR II
B L12
R570 Bl.3
X95
X97
R118 Bl.3
D R130 Bl.3

ROHDE&SCHWARZ	A		04.85	BG	F	37 066	07.89	Pa	Bearb.	10.84	BG	Benennung: SUMMING LOOP
	B		08.85	PF								Zeichn.-Nr: 807.4015 S
	C											Blatt Nr: 1 v 3
												zu Gerat FSA
												reg. i. V. 804.4011 V

9 10 11 12 13 14

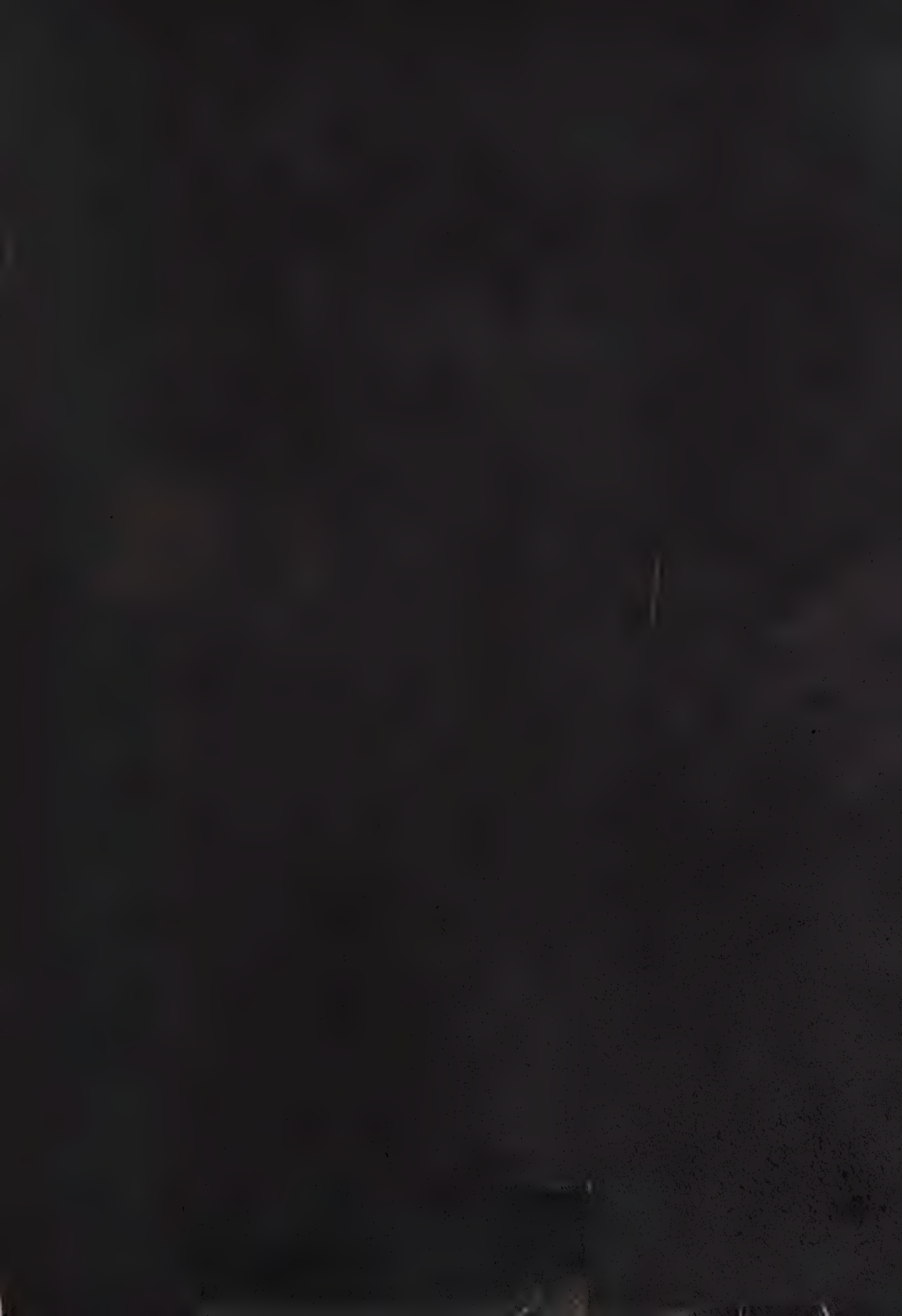

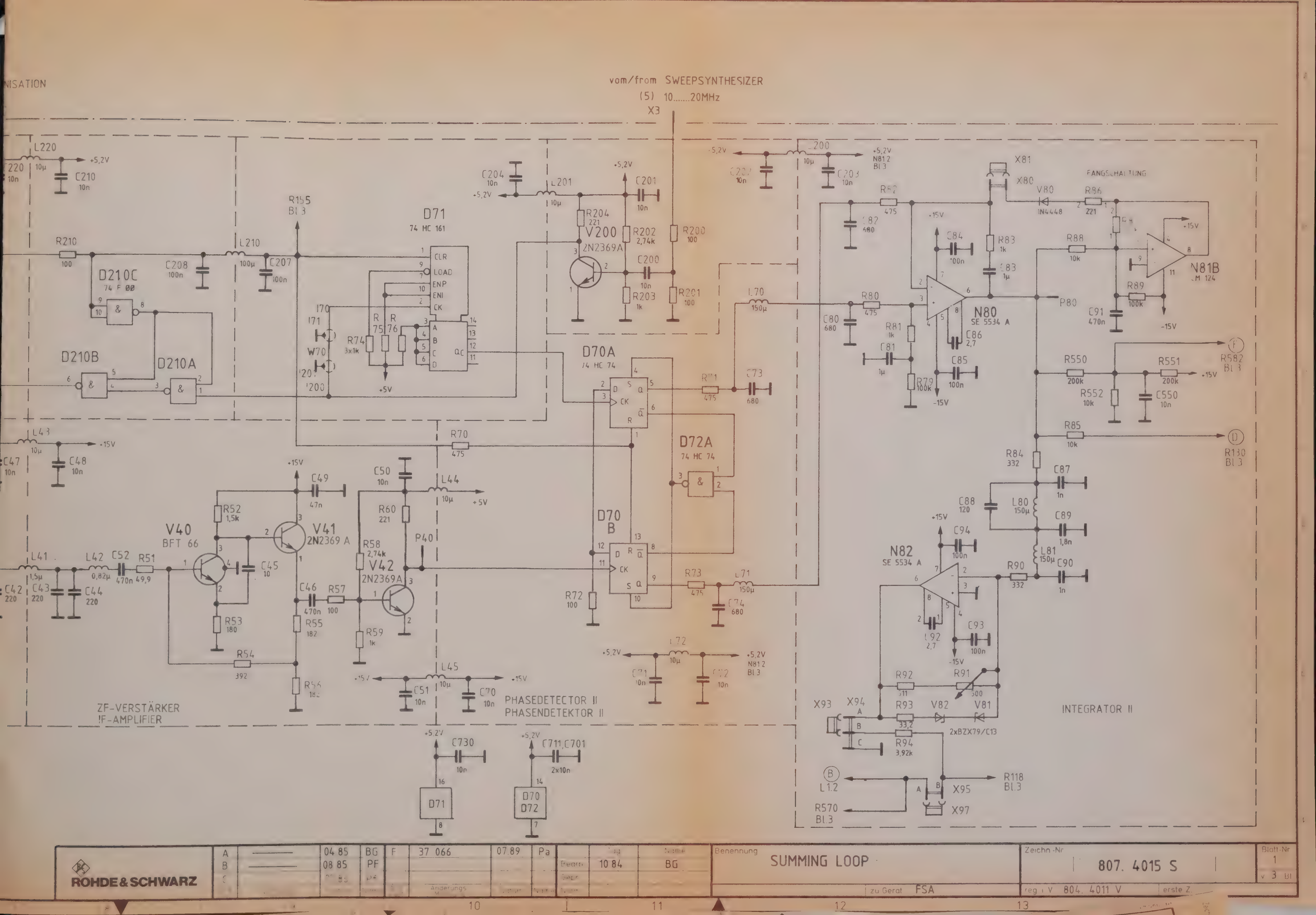

ROHDE & SCHWARZ	A	———	04 85	BG	F	37 066	07.89	Pa	Bearb.	10 84	BG
	B	———	08 85	PF							
	C					Änderungs					

Benennung: SUMMING LOOP

zu Gerät: FSA

Zeichn.-Nr.: 807. 4015 S

reg. i. V. 804. 4011 V

erste Z.

Blatt-Nr.: 1

v. 3 Bl.

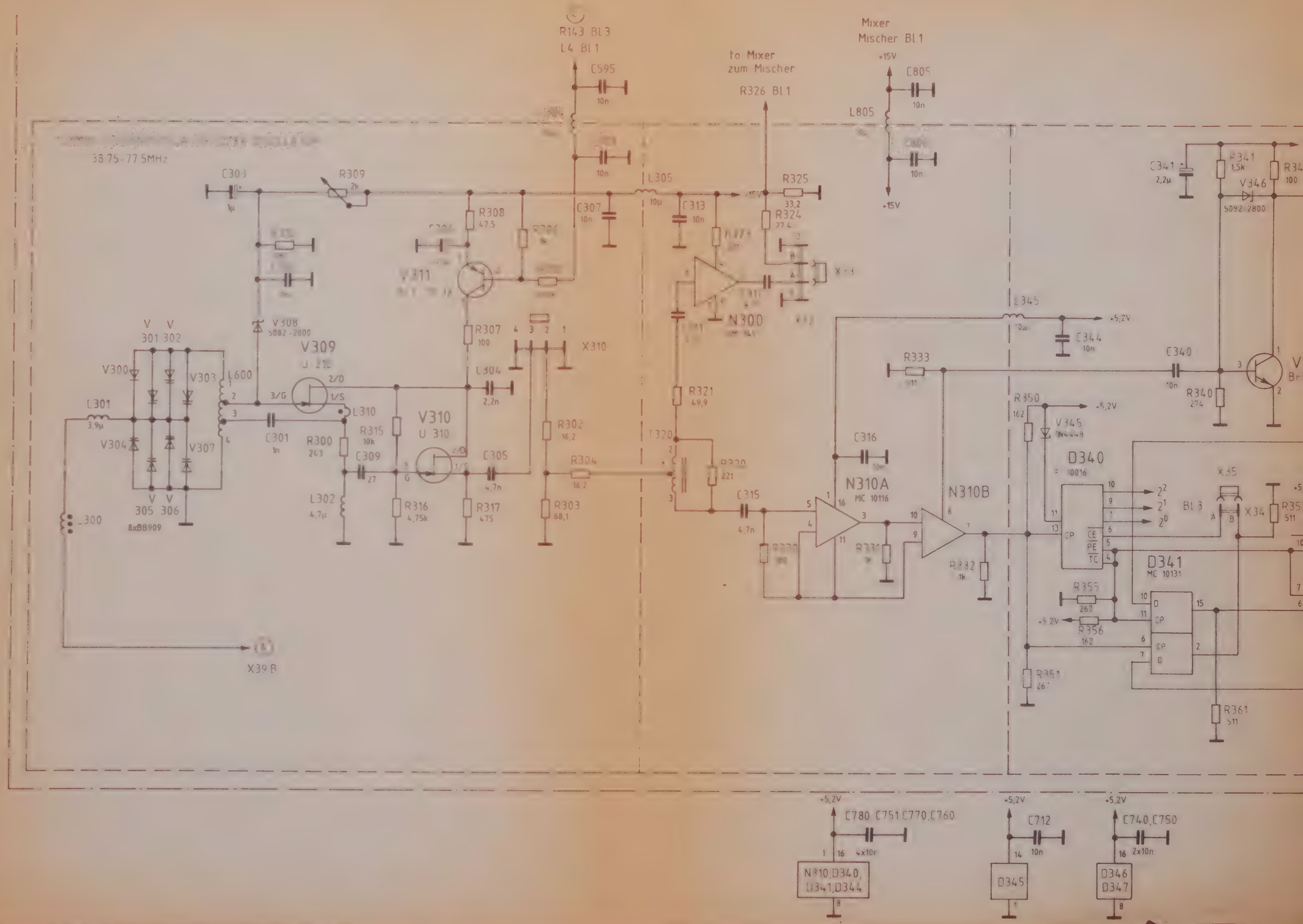

R143 Bl.3
L4 Bl.1
C595
10n
to Mixer
zum Mischer
R326 Bl.1
Mixer
Mischer Bl.1
+15V
C805
10n
L805
38.75-77.5MHz
C303
1µ
R309
2k
R308
47.5
V311
C307
10n
L305
10µ
C313
10n
R325
33,2
R324
27,4
N300
V308
5082-2800
V309
U 310
V300
V303
L600
L301
3,9µ
V304
V307
V 301
V 302
V 305
V 306
8xBB909
L300
C301
1n
R300
243
L310
R315
10k
C309
27
L302
4,7µ
R307
100
L304
2,2n
V310
U 310
R316
4,75k
R317
475
C305
4,7n
X310
R302
16,2
R304
16,2
R303
68,1
R321
49,9
T320
R320
221
C315
4,7n
C316
N310A
MC 10116
N310B
R331
1k
R332
1k
R333
L345
10µ
C344
10n
+5,2V
C340
10n
R340
274
R350
162
V345
1N4448
D340
D341
MC 10131
R355
267
R356
162
R351
267
R361
511
C341
2,2µ
R341
1,5k
V346
5082-2800
X35
X34
Bl.3
X39 B
C780 C751 C770 C760
4x10n
N310, D340, D341, D344
C712
10n
D345
C740, C750
2x10n
D346
D347

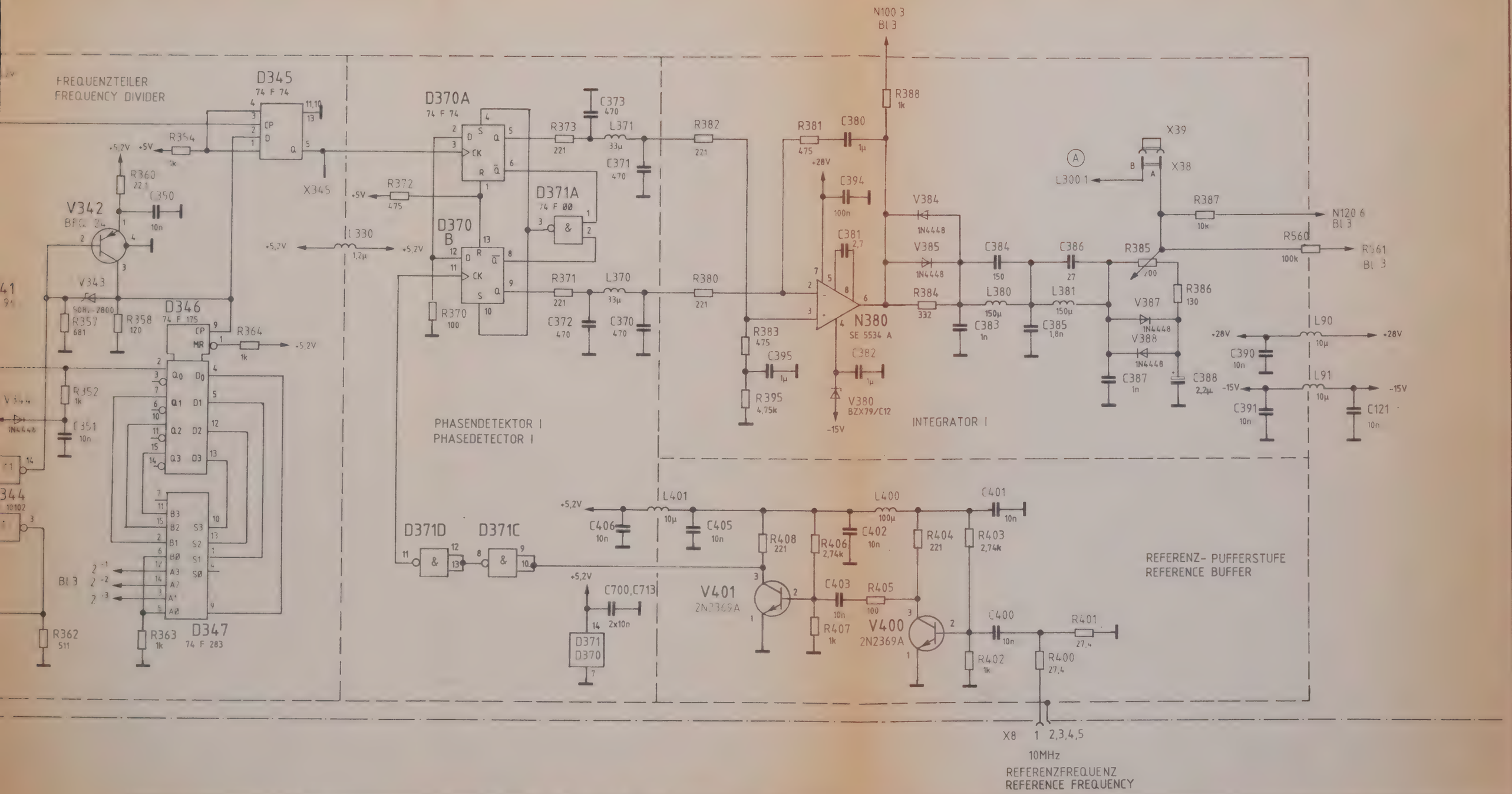

ROHDE&SCHWARZ	A		04 85	PF	D	32 766	11.87	Pa	1KGF	Tag	Name	Benennung: SUMMING LOOP
	B		08 85	PF	F	37 066	07.89	Pa	Bearb.	02.86	BG	
	C		07 86	Pf								zu Gerät FSA

Zeichn.-Nr: 807. 4015 S

Blatt-Nr: 2 v 3 Bl

reg. i. V. 804. 4011 V erste Z

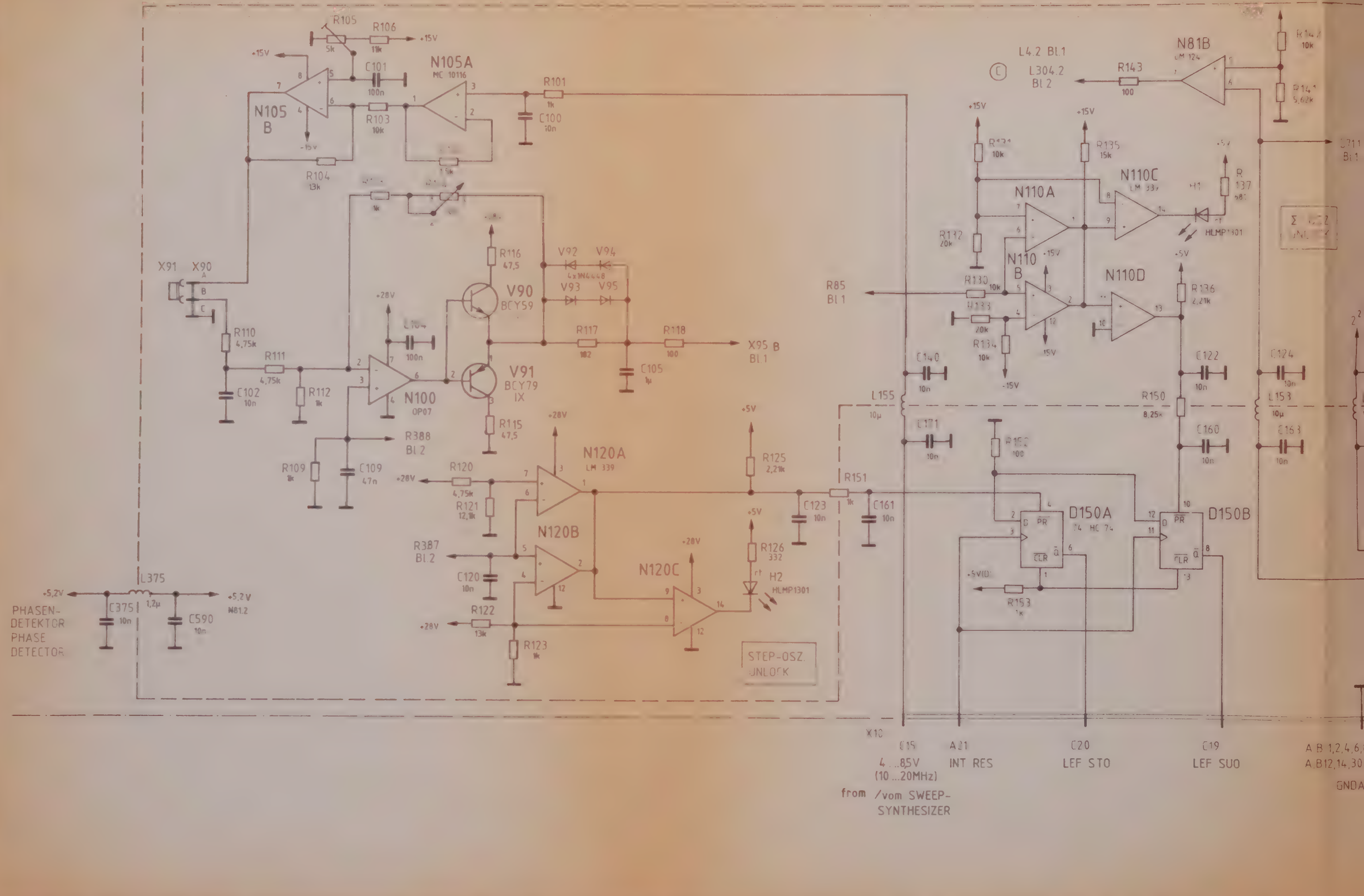

N105 B
N105A
MC 10116
R105
R106
C101
R103
R104
R101
C100
X91
X90
R110
R111
C102
R112
N100
OP07
R388
Bl.2
R109
C109
R116
V90
BCY59
V91
BCY79
IX
R115
V92
V94
V93
V95
R117
R118
C105
X95 B
Bl.1
N120A
LM 339
N120B
N120C
R120
R121
R387
Bl.2
C120
R122
R123
R125
R126
H2
HLMP1301
C123
R151
C161
L375
C375
C590
PHASEN-
DETEKTOR
PHASE
DETECTOR
STEP-OSZ.
UNLOCK
L4.2 Bl.1
L304.2
Bl.2
R143
N81B
LM 124
R135
N110A
N110C
LM 339
R137
HLMP1301
R132
N110 B
N110D
R85
Bl.1
R130
R133
R134
R136
C140
C122
C124
L155
R150
L153
C171
C160
C163
R152
D150A
74 HC 74
D150B
R153
X10
C15
4...8,5V
(10...20MHz)
from /vom SWEEP-
SYNTHESIZER
A21
INT RES
C20
LEF STO
C19
LEF SUO
A B 1,2,4,6,
A B12,14,30
GNDA

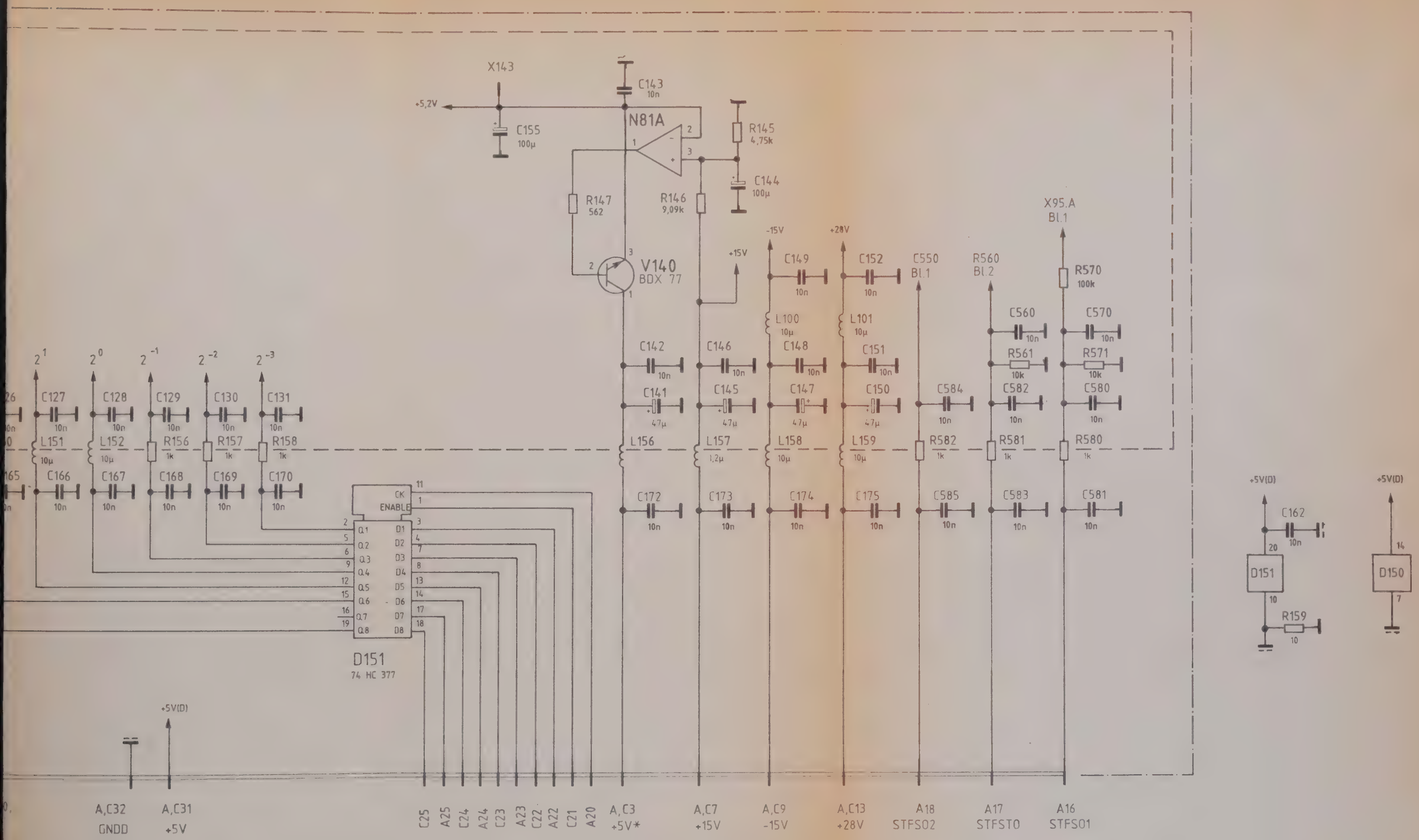

ROHDE & SCHWARZ	C		07.86	Pf	G	37 066	11.89	Pa	1KGF			SUMMING LOOP	Zeichn. Nr. 807. 4015 S	Blatt Nr. 3
	E	37 063	10.88											
	F	37 066	07.89	Pa			—							
	And	Änderungs-Mitteilung	Datum	Name	And	Änderungs-Mitteilung	Datum	Name	Norm			zu Gerät FSA	reg. i. V. 804. 4011V	erste Z

Ansicht und Leitungsführung Lötseite
View of tracks on solder side

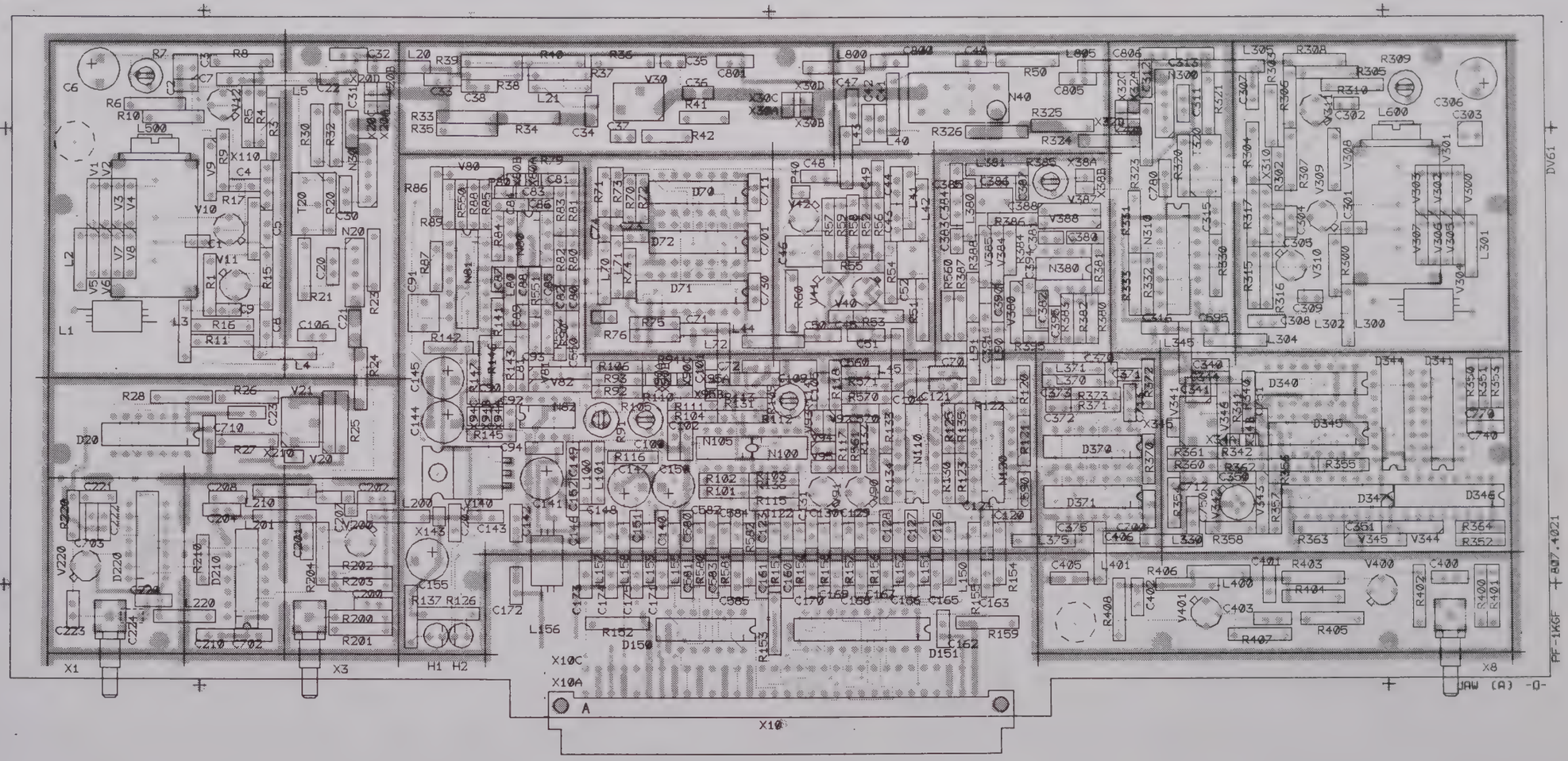

VARIANTENERKLÄRUNG/VERSION
VAR 02 – GRUNDAUSFÜHRUNG/BASIC MODEL

ACHTUNG: EGB!
Elektrostatisch gefährdete Bauelemente erfordern eine besondere Handhabung.
ATTENTION ESD!
Electrostatic sensitive devices require a special handling.
(hierzu HVC 250)

D		07.86	PF	Maße ohne Toleranzangabe	Maßstab 1 : 1	
					Halbzeug, Werkstoff	
				1KGF Tag / Name	Benennung	
				Bearb 07.86 PF	SUMMING LOOP	Z
				Gepr		
				Norm		
And Zust	Änderungs-Mitteilung	Tag	Name	ROHDE&SCHWARZ	Zeichn-Nr 807.4015.01 EE	Blatt-Nr 3 v 81
				zu Gerat FSA	reg i V 806.4011 V	erste Z 806.4011

Für diese Unterlage behalten wir uns alle Rechte vor

Ansicht und Leitungsführung Lotseite
View of tracks on solder side

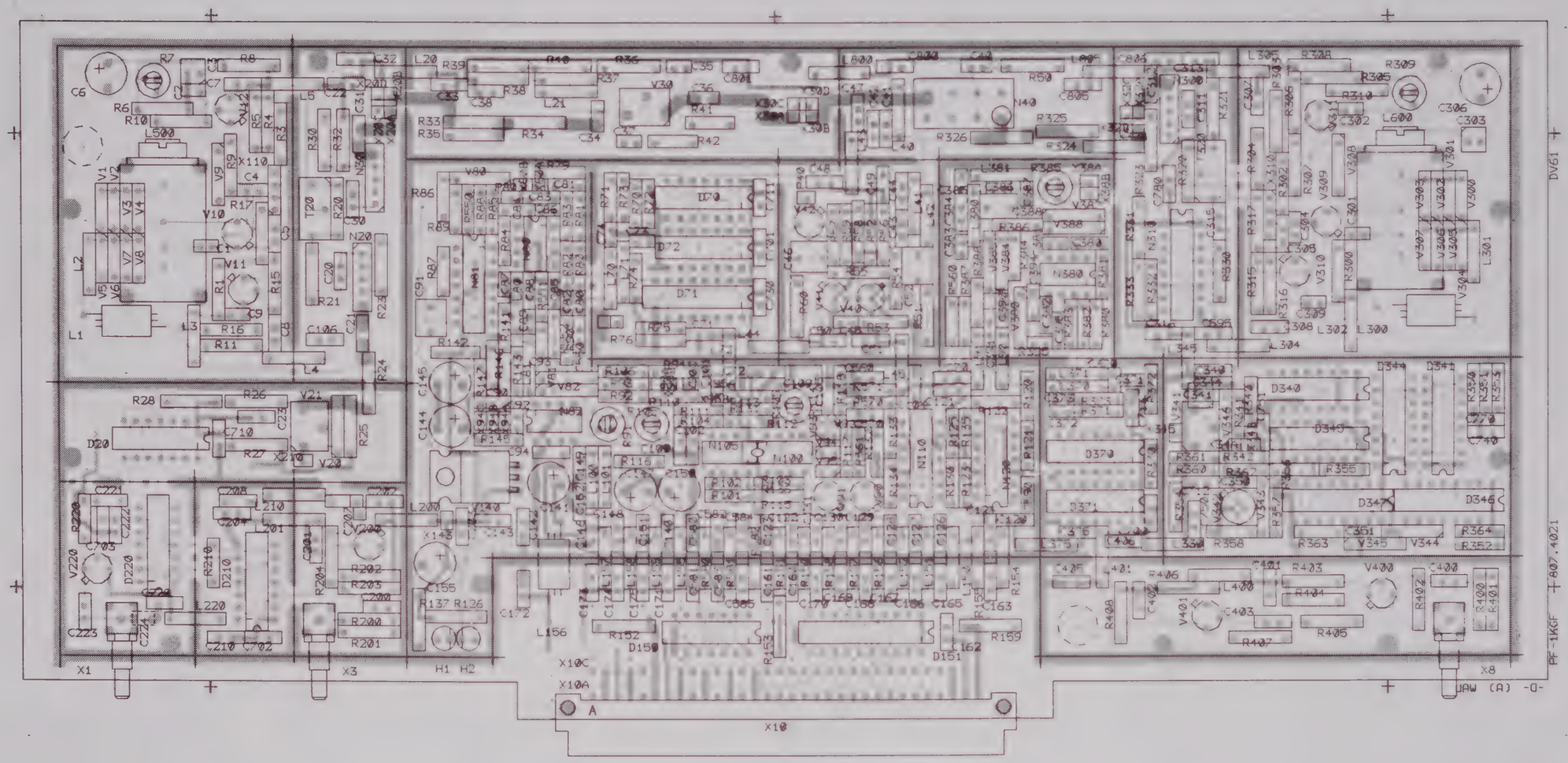

VARIANTENERKLÄRUNG/VERSION
VAR 02 – GRUNDAUSFÜHRUNG/BASIC MODEL

ACHTUNG EGB!
Elektrostatisch gefährdete Bauelemente erfordern eine besondere Handhabung
ATTENTION ESD!
Electrostatic sensitive devices require a special handling

Ihrerzu HVC 250

D	07.86	PF	Maße ohne Toleranzangabe	Maßstab 1 : 1	
				Halbzeug, Werkstoff	
			1KGF Tag / Name	Benennung	
			Bearb 07.86 PF	SUMMING LOOP	Z
			Gepr		
			Norm		
And Zust	Änderungs-Mitteilung	Tag / Name	ROHDE & SCHWARZ	Zeichn-Nr 807.4015.01 EE	Blatt-Nr 3
			zu Gerat FSA	reg i v 806.4011 V	erste Z 806.4011

Für diese Unterlage behalten
s alle Rechte vor

ROHDE&SCHWARZ

SERVICE DOCUMENTATION

Sweep Synthesizer

807.5011.02

Contents

		Page
6	**Service Instructions Sweep Synthesizer**	6.1
6.1	**Function Description**	6.1
6.1.1	Principle of Non-integral Division	6.1
6.1.2	Sweep Synthesizer	6.2
6.2	**Testing and Adjustment**	6.10
6.2.1	Adjusting the Frequency Range of the VCO	6.10
6.2.2	Adjusting the Analog Phase Interpolation	6.10
6.3	**Troubleshooting**	6.11
6.3.1	Troubleshooting Flow Chart	6.12
6.3.2	Measured Values and Diagrams	6.13
6.3.2.1	Interrupt Signal "Frequency Sweep Oscillator"	6.13
6.3.2.2	Spectral Purity Poor	6.14
6.3.2.3	No Sweep	6.15

Parts lists
Circuit diagrams
Component location plans

6 Service Instructions Sweep Synthesizer

(See circuit diagram 807.5011 S)

6.1 Function Description

The local oscillator (LO) signal is phase-controlled during the complete sweep for spans up to 5 MHz displayed on the analyzer screen. The sweep process is a sequence of frequency steps of the sweep synthesizer whose number (at least 1000 per sweep) and width (0.1 Hz to 1 kHz) depend on the span and the sweep time. Such a digital sweep produces a linear frequency variation if the PLL is designed optimally and if the step size is much smaller than the reference frequency. This means that the VCO frequency is not an integral multiple of the reference frequency but is the mixed fractional multiple N.F.

$$f_{Ref} = f_{VCO}/N.F$$

The following section briefly describes the principle of non-integral division.

6.1.1 Principle of Non-integral Division

Fundamentals

Digital frequency division involves the counting of time intervals. The division ratio is therefore automatically an integer within a count cycle. A division ratio N.F (correspondingly less with number F after decimal point divisible by 2, 4, 5 etc.) determined over 10^n ($n = f_{Ref} / SW_{min}$ = number of digits of F; f_{Ref} = reference frequency, SW_{min} = smallest step size) results in an alternating division ratio $Z_v = (N; N+1)$ according to the following algorithm where $v = 1, 2, \ldots\xi\ldots, n$ as the consecutive number of the reference intervals:

v	Z_v	Phase error $\phi v/2\pi$	$\phi v/2\pi$ for N.F = N.4
ξ-1	N	$F/10^n < 1$ + $F/10^n$	0.4<1 +0.4
ξ	N	$S\xi < 1$ + $F/10^n$	S=0.8<1 +0.4
ξ+1	N+1	$S \geq 1 \rightarrow S_{\xi+1} = S-1 < 1$ + $F/10^n$	S=1.2≥1→S=0.2 + carry +0.4
n-1	N	$S_{n-1} < 1$ + $F/10^n$	S=0.6<1 +0.4
n	N+1	$S \geq 1 \rightarrow S_n = S-1 = 0$	S=1.0≥1→S=0.0 + carry

ϕv is the phase error in interval v absed on the division by Z_v instead of by N.F.

Circuitry

The principle described above results in the circuit shown in Fig. 6-1 for generating an average division ratio N.F.

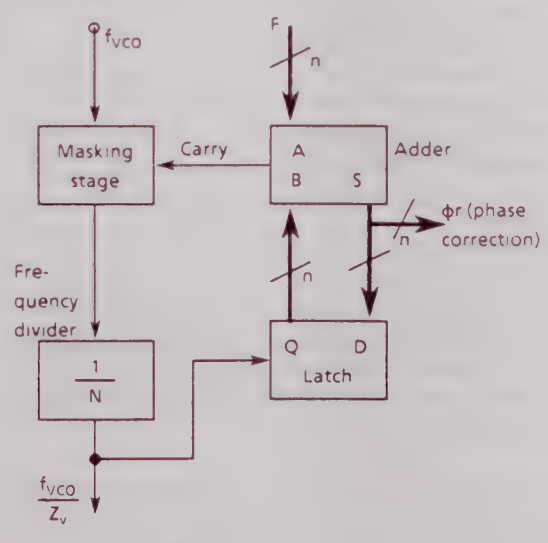

Fig. 6-1 Generation of an average division ratio N.F.

With each output pulse of the frequency divider 1/N, the total S = A + B of the adder is increased by the value of the number F following the decimal point. If the adder outputs a carry bit following an addition, i.e. $s > 10^n$, a VCO pulse is eliminated prior to the frequency divider so that the division ratio 1/(N + 1) is effective for this counting period.

Phase error compensation

Because of the alternative division ratio Z_v = (N; N + 1), the VCO would be frequency-modulated with the modulation frequency $f_{mod} > f_{Ref.}$ depending on the number F following the decimal point (N.4 for the example shown in 6.1.1: $f_{mod1} = f_{Ref} \times 0.2$; $f_{mod2} = f_{Ref} \times 0.4$) if the divider output signal f_{VCO}/Z_v were applied directly to the PLL. Synthesizers with the fractionators usually have analog phase interpolation circuits (API) for phase error compensation for this reason. The added total S in Fig. 6-1 indicates the relative phase error $Sv/2\pi$ in binary form. The analog variable (current or voltage) required for the phase error correction is obtained by multiplication by 2π and subsequent D/A conversion.

6.1.2 Sweep Synthesizer

The complete block diagram of the sweep synthesizer is shown in Fig. 6-2. The main function units included in the module are as follows:

- Gate array SLX 6324
- Generator for 5 MHz to 20 MHz
- Digital control circuit
- Analog phase interpolation (API)
- Phase/frequency control
- Sweep clock generator

Gate array SLX 6324

A frequency divider with a mixed fractional divider ratio N.F is integrated in the gate array D26 for $30 \leq N \leq 200$ and $000.000 \leq F \leq 999.999$. The gate array also contains circuits for the following functions:

- Conversion of BCD-coded phase error information of the three most significant digits following the decimal point into pulse sequences of 0 to 9 pulses each.
- Microprocessor interface.

Microprocessor interface

Fig. 6-3 shows the block diagram of the interface. Data are stored using decimal counters similar to type 74192. The frequency can then be controlled, on the one hand via the bus and the control inputs of the counters (normal latch mode, setting of start frequency) and on the other hand via the clock inputs (sweeping). The signals LRD, LWR and LBSFR2 control the data transfer between the gate array and bus.

LBSFR2	LRD	LWR	Function
0	0	0	Illegal!
0	0	1	Read out
0	1	0	Write in
0	1	1	D0 to D7 high impedance
1	X	X	D0 to D7 high impedance

Address decoder

Controlled by the three address inputs AP1, AP2 and AP3, the address decoder selects the interface components to be accessed.

LBSFR2	AP1	AP2	AP3	Component
0	0	0	0	Digits 8/9 of division factor
0	1	0	0	Digits 6/7
0	0	1	0	Digits 4/5
0	1	1	0	Digits 2/3
0	0	0	1	Digit 1
0	1	0	1	Function decoder
0	0	1	1	Not used
0	1	1	1	Not used
1	X	X	X	Address decoder disabled

Function decoder

The parameters for sweep mode are passed to the counters via the function decoder. If the function decoder is addressed by the address decoder, several functions can be selected simultaneously via the data lines DPO to DP5.

DP5 = 1: resetting of digits 1 to 9
DP5 = 0: reset signal not active

DP4 = 1: sweep clock WO enabled
DP4 = 0: sweep clock disabled

DP3 = 1: selected digit counts upwards
DP3 = 0: selected digit counts downwards

DP2	DP1	DP0	Sweep clock to
0	0	0	Digit 9, step size 0.1 Hz
0	0	1	Digit 8, step size 1 Hz
0	1	0	Digit 7, step size 10 Hz
0	1	1	Digit 6, step size 100 Hz
1	0	0	Digit 5, step size 1 kHz
1	0	1	Digit 4, step size 10 kHz
1	1	0	Digit 3, step size 100 kHz
1	1	1	Digit 2, step size 1 MHz

Counters

The counters are designed such that a nine-digit decimal number can be represented. The three most significant digits represent the integral division ratio N and are applied to the frequency divider. The number F following the decimal point is formed by the last six digits. These are processed further in the adder. Each counter component can be set via the address decoder and the data bus with DP0 to DP7. The following configuration is applicable:

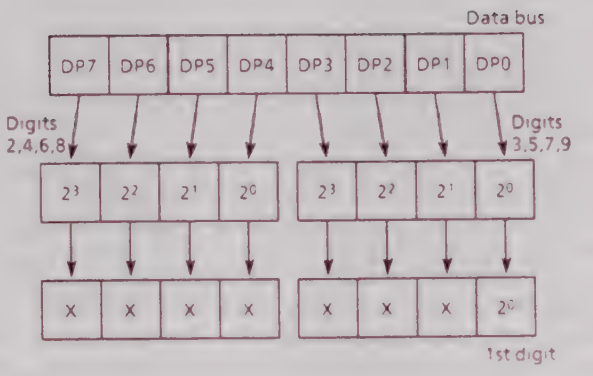

The counters can be incremented or decremented via the function decoder and the sweep input. Carry bits are then transferred to the next higher digit when incrementing and borrow bits are transferred to the next lower digit when decrementing.

Adder

The adding sequence for producing the phase error information and a masking signal is shown in Fig. 6-4. Each element consists of a 4-bit decimal adder whose first summand comes from the corresponding decimal counter of the interface and whose summand is the result of the previous addition which is stored temporarily. The result registers of all adding stages are automatically reset as soon as a value is written into one of the previous counters The result of the addition is transferred to the registers with the trailing edge of the external clock signal Ref. 1.

Shaper circuit

Fig. 6-5 shows the block diagram for the shaper circuit. The three decimal counters are loaded statically with the added value of the previous adders during the Low state of the external signal Ref.2. During the High state of the signal Ref.2, pulses are output to the outputs P1, P2 and P3 for each of the three decimal places corresponding to the statically loaded value of the respective decimal counter. The pulse width corresponds to the VCO period.

Frequency divider with masking switch

The digits 1, 2 and 3 of the number stored in the microprocessor interface are used to program the frequency divider. With the sweep synthesizer, the VCO is divided in a ratio N = 50 to N = 200. The number F following the decimal point which is processed in the adder chain becomes effective if a carry occurs from the decimal adder for the first decimal digit (digit 4). This carry bit leads to masking of a VCO pulse after the trailing edge of the signal Ref.1. Fig. 6-6 shows the block diagram of the frequency divider. The two decimal counters and the flip-flop for the first digit are automatically loaded with the value stored in the interface on obtaining the smallest division value. In addition, loading can be induced at any time by a logical "1" at the input FTLD. A logical "1" at input CLR resets the masking logic.

Generator for 5 MHz to 20 MHz

The generator for the sweep synthesizer output frequency 5 MHz < fSWO < 20 MHz consists of the VCO for 205 to 220 MHz, the mixer stage and the isolating amplifier.

VCO for 205 to 220 MHz

The VCO is designed as a Colpitts oscillator. The parallel resonant circuit L186/C185 largely determines the oscillation frequency together with the tuning diodes V183 to V190 coupled via C184. The frequency can be varied by approx. 20 MHz using trimmer C185 and by approx. 15 MHz using the tuning diodes with a tuning voltage of 5 V to 18 V. The field effect transistor V180 is loosely coupled to the resonant circuit with C186 in order to reduce the sideband noise of the oscillator and also the influence of the input capacitance of the transistor on the tuning range. The resonance transformation with C187 and the series connection C190/C191, together with the impedance transformation of the transistor, ensure stable oscillation. The RF level at C191 is approx. -10 dBm. This is first amplified by the integrated amplifier OM 345 by 10 dB and then by a discrete amplifier (V181) by a further 10 dB so that an RF level of approx. + 10 dBm is available at jumper X180/X181.

Mixer stage

The AC voltage from the VCO with a frequency of 205 MHz to 220 MHz is applied via a 3-dB attenuating element with a level of +7 dBm to the LO input of the ring mixer N200 (SRA1). The 200-MHz reference signal from the reference 2 module is present at socket X4 with approx. + 10 dBm. The reference signal with -3 dBm is applied to the RF input of the mixer via a 13-dB attenuating element. The high-frequency mixture products are filtered out at the IF output and the required IF signal of 5 MHz to 20 MHz applied to two identical isolating amplifiers.

Isolating amplifiers

A 50-Ω 6-dB path routes the mixer output signal with -10 dBm to two identical 2-stage amplifiers. The amplifiers have an input impedance of 50 Ω, the output impedances are 200 Ω. The gain is approx. 20 dB so that a signal amplitude of approx. 1 V is present at the outputs. The output of an amplifier is connected to the output socket X1 and the sweep synthesizer signal is applied from there to the summing loop module. The second amplifier (V230/V231) provides the signal for the frequency divider (gate array)

Compensation

To ensure exact functioning of the sweep synthesizer, exact timing must be guaranteed of the divider output signal FG (pin 6) when the pulse is masked, controlled by the signal Ref.1, of the adder overflow, of the appearance of the compensation pulses at the output of the gate array, controlled by the signal Ref.2, and of the switch-on/off times of the compensation current sources. These tasks are handled by the digital control with the integrated circuits D50 to D64.

Control signals Ref. 1 and Ref. 2

The integrated circuit D50 converts the sinewave voltage from the isolating amplifier into a TTL signal. This results in the clock "VCO" for the gate array and the current source control. The divided signal FG is delayed by six clock periods by D flip-flops (D51/D52) and is then the Ref.2 signal or, inverted, the Ref.1 signal.

Current source control

The function block with the integrated circuits D60, D61 and D62 generates the switching signal for the most significant current source. This part of the circuit processes the phase error information P1 from the gate array (pin 42) for the first decimal digit. The counter D61 is loaded with 0 during the Low state of the signal Ref.2. The output "max/min" of the counter becomes Low so that the clock is now present at the input of the counter via D60B, D60C and D60D. After switching Ref.2 to High (the compensation pulses from the gate array can be expected from this time onwards), the counter is clocked upwards by the VCO signal until the number 15 is obtained. The "max/min" output becomes High and suppresses further clocking of the counter. During the counting procedure, D62 and D60C suppress the same number of VCO periods as compensation pulses arriving via P1. The circuits D57/D58/D59 and D54/D55/D56 are of the same design as D60/D61/D62. They generate the switching signals for the second and third current sources respectively taking into account the phase error information P2 and P3. The phase error information of the 4th decimal digit originates in the gate array as BCD information. The switching signal for the 4th current source is generated by D63 and the counter D64.

Analog unit

The npn transistor array CA 3127 (N93) implements five identical current sources for 0.5 mA. The currents from 4 current sources are applied via diode switches. The currents flow via the control line during the High state of the current source switching signals, and the path to the integrator is blocked. If the switching signals are Low, the currents are applied to the integrator D90 via current dividers, which divide the currents in decades according to the significance of the decimal digits and discharge C96. The 5th current source is a current image for detection of the current value. Two identical current sources for 5 mA are designed using the pnp double transistor AD821 (N94). The current from one current source is applied via a diode switch. The current source charges the integration capacitor C96 during the High state of the control signal until the comparator N91 switches over, and consequently the RS flip-flop D90.

The current from the current source is then applied to D90. The flip-flop is reset by the next divider output pulse at FG. The second current source again acts as a current image. The amplifier N92 controls the 0.5 mA current sources such that the ratio between the charging and discharging currents, which is set for maximum spurious suppression using R118, remains constant. The trailing edge of the output signal from D90 does not exhibit the phase jitter resulting from the alternating division ratio.

Phase/frequency control

The digital phase/frequency detector MC 4044 (D130) compares the frequency and phase of the non-integral divided and phase-compensated VCO signal from D90 with a 100-kHz reference. The 100-kHz reference frequency is delivered by the 100/1 divider D4 whose 10-MHz input signal is applied to the sweep synthesizer by the reference 1 module via X8. The tuning/control voltage for the VCO is obtained by integrating the output pulses of the phase detector by the differential integrator N130. The tuning voltage is applied to the tuning voltage of the VCO via a lowpass. The tuning voltage is then applied further via X21/A13 to the summing loop module and via a voltage divider and X21/C13 for selftest evaluation. In addition the window discriminator TCA 965 (N160) determines wether the valid range of the tuning voltage has been exceeded. In this case, the flip-flop D160 signals the interrupt "Frequency sweep synthesizer" via X21/C20 to the computer. The interrupt flip-flop is reset by a Low pulse at X21/A21.

Sweep clock generation

The part of the circuit with D1 to D20 is used to generate the sweep clock. The 10-MHz reference signal is divided controlled by the frequency processor. The sweep frequency f_{sw} is between 500 kHz (e.g. span 999.9 kHz, sweep time 20 ms) and 0.5 Hz (span 100 Hz, sweep time 1980 s) in normal analyzer mode. The reference frequency of 10 MHz is initially halved by D1 (because sweep time always K x 20 ms, KE/N). The divider factor is according to the following equation for the further programmable division:

$$\frac{5\ MHz}{f_{sw}} = 10^{DV} \times T \times \frac{10^4}{R}$$

The decimal values of the frequencies from 500 Hz to 5 MHz are added to the inputs DV (= D0 to D4 of HC 151) of the multiplexer D9. The decimal steps are produced by four tens dividers D2A, D2B, D3A and D3B. The multiplexer D9 is programmed via the data lines DP8, DP9 and DP10 as well as latch D7 which is selected using LBSFR0. The multiplexer D9 routes the sweep signal on to the two cascaded BCD frequency dividers D10 and D11 (HC 192) with the divider factor T ≤ 100. D10 and D11 are programmed via the data lines DP0 to DP7 and the latch D8 which is also addressed by LBSFR0. Further frequency division is carried out by the four series-connected rate multipliers D13, D14, D15 and D16. The rate R defines how many output pulses arrive per 10^4 input pulses. D13 and D14 receive their data via data lines DP8 to DP15 and the latch D17, D15 and D16 receive their data via the data lines DP0 to DP7 and the latch DP18. Both latches are addressed by LBSFR1. The sweep clock is applied to the gate array after two synchronization flip-flops. The complete frequency divider can be reset by flip-flop D6 via data lines DP14 and DP15 and latch D7. In addition, the divider input clock (10 MHz) can be disabled via the signal line PSTOP.

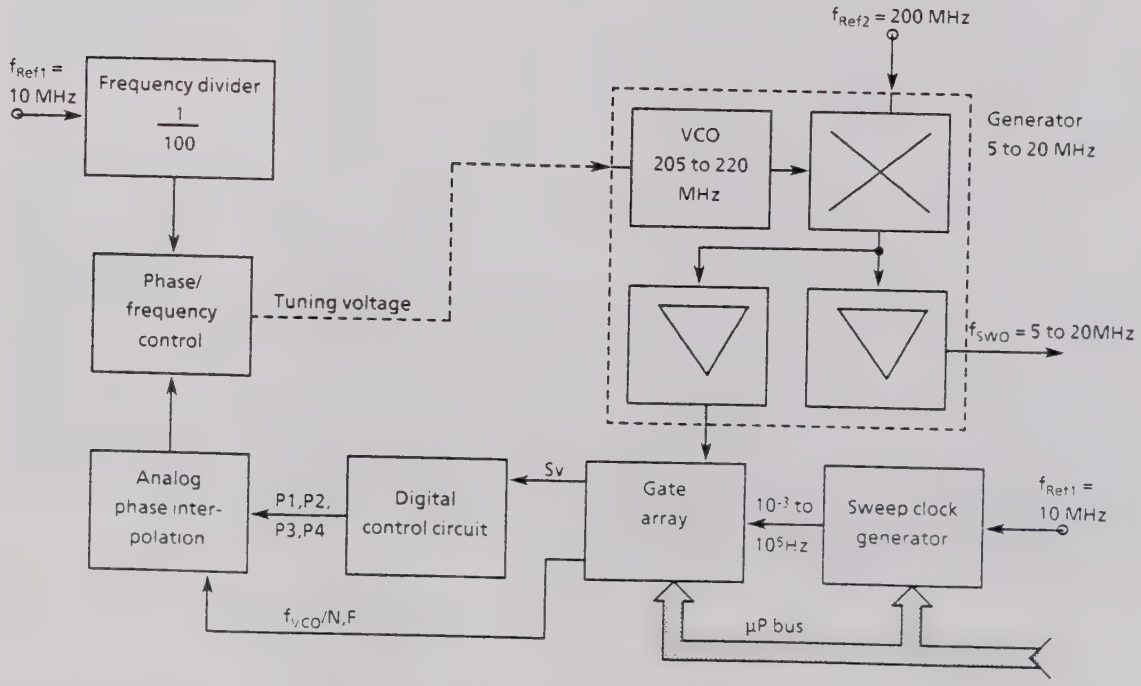

Fig. 6-2 Block diagram of sweep synthesizer module

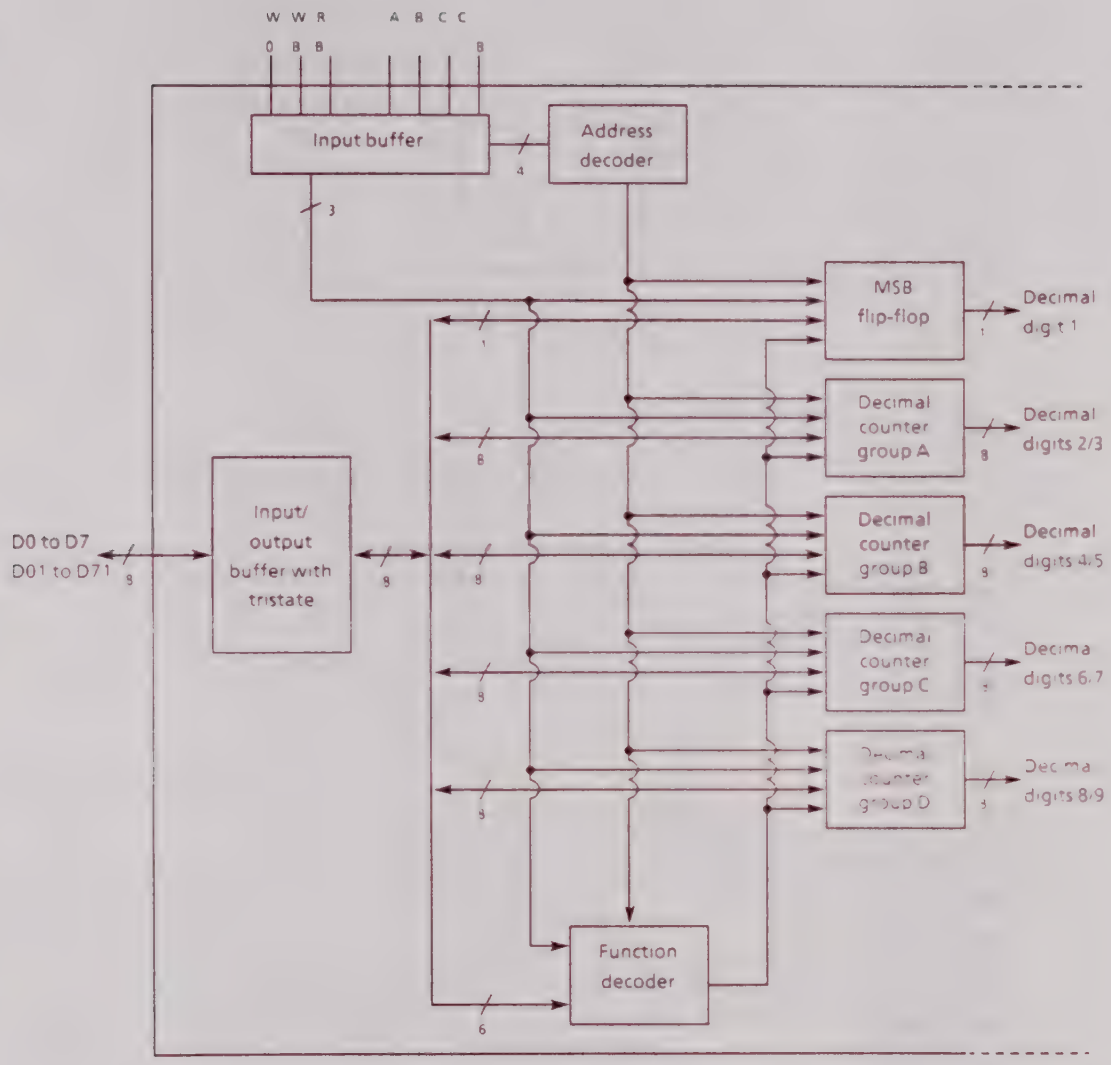

Fig. 6-3 Block diagram of microprocessor interface

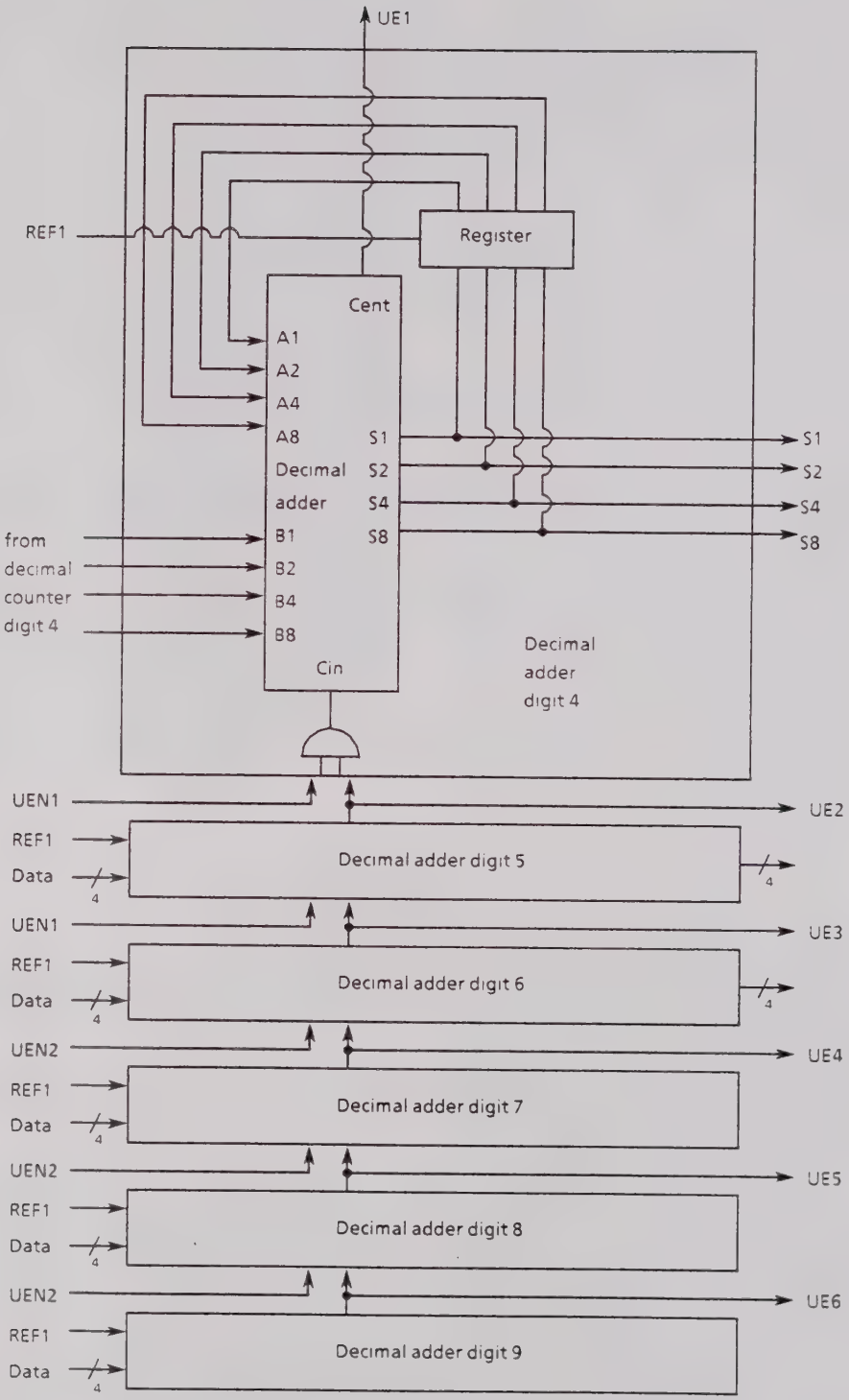

Fig. 6-4 Adder stages

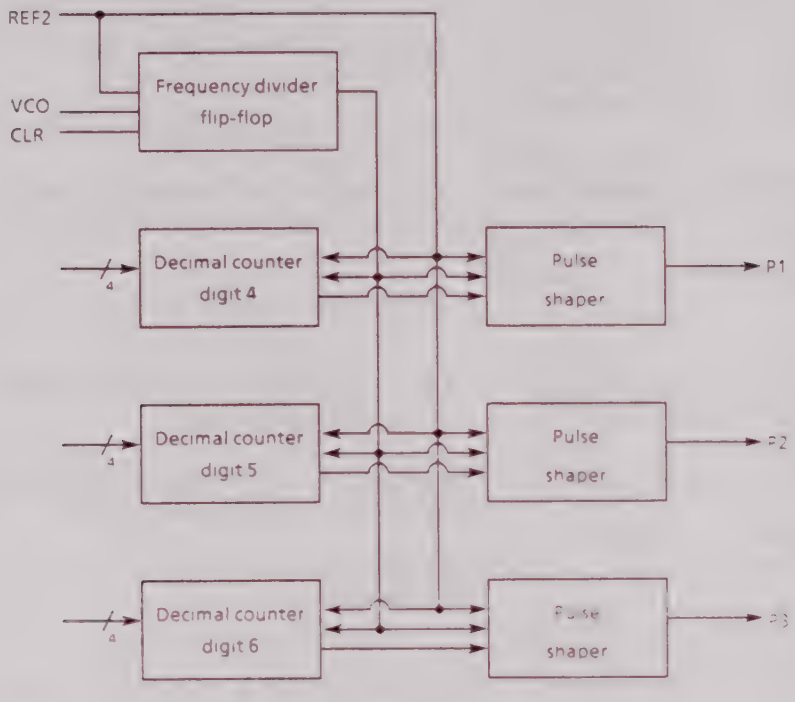

Fig. 6-5 Shaping circuit

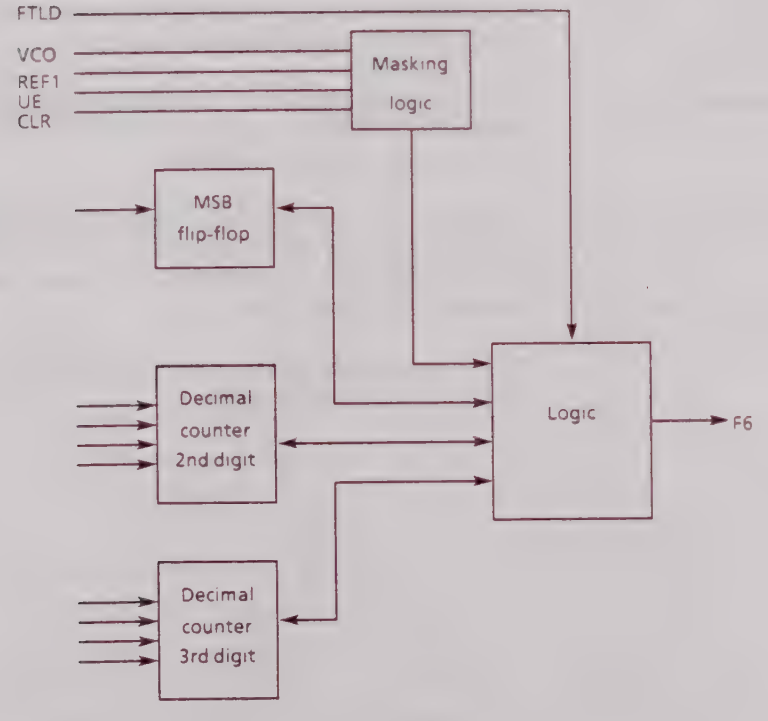

Fig. 6-6 Frequency divider

6.2 Testing and Adjustment

The following must be adjusted on the sweep synthesizer module:

- The frequency range of the VCO at the defined tuning voltage
- The analog phase interpolation

6.2.1 Adjusting the Frequency Range of the VCO

Before adjusting, program the VCO as follows:

Start frequency: 10 MHz
Span: 0

The following instrument settings are required to this end:

Centre frequency: 99.85 MHz
Span: 0

Adjustment: Adjust with trimming capacitor C185 to obtain a DC voltage of 4.50 V at X21/A13.

Checking the linearity of the characteristic

Instrument setting:

Centre frequency: 101.0875 MHz
Span: 0

Voltage at X21/A13: 8.5 V ± 0.25 V at a setting of 20 MHz.

6.2.2 Adjusting the Analog Phase Interpolation

The analog phase interpolation contributes to the spectral purity close to the carrier (± 10 kHz).

The analog phase interpolation can be optimized using potentiometer R118.

Typical signs of faulty adjustment or faulty functioning are:

- Level difference between carrier and sideband too small
- Sideband noise has periodic overshoots
- Sideband appears highly smoothened (non-typical for the set video bandwidth).

The calibration generator 100 MHz/-20 dBm or a generator with a corresponding spectral purity must be used for the adjustment.

Following the adjustments, check the spectral purity at various spans between 100 Hz and 100 kHz and various IF bandwidths (resolutions) between 10 Hz and 5 kHz.

If it is not possible to adjust exactly enough, see Section 6.3, Troubleshooting.

6.3 Troubleshooting

Analyzer function faults caused by sweep synthesizer

- Interrupt signal "Frequency sweep oscillator"
  PLL of sweep synthesizer does not lock in or/ and tuning voltage is outside valid range of 5 V to 17 V.

- Insufficient spectral purity close to the carrier.
  (Check with calibration output 100 MHz/ -20 dBm)

Instrument setting:
Centre frequency: 100 MHz
Span: 2 kHz
RBW: 30 Hz

Screen display:

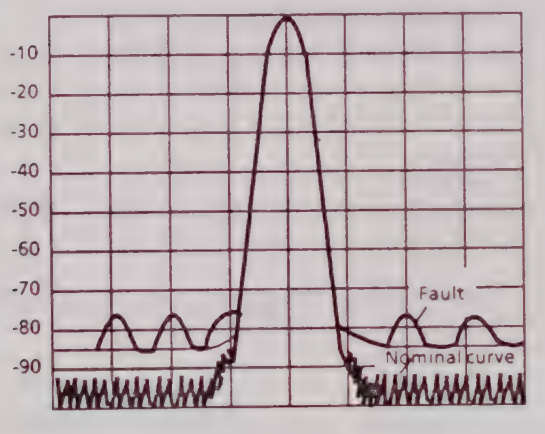

Instrument setting:
Centre frequency: 100 MHz
Span: 10 kHz
RBW: 300 Hz

Screen display:

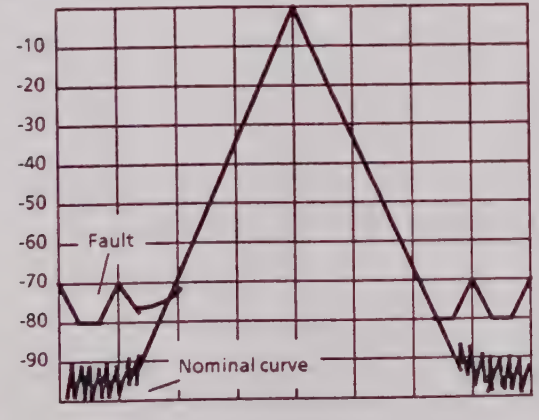

- No sweep with spans up to 5 MHz
  (Check with calibration output 100 MHz/ -20 dBm)

Instrument setting:
Centre frequency: 99.99 MHz
Span: 20 kHz
RBW: 3 kHz
Ref. level: –20 dBm

Screen display:

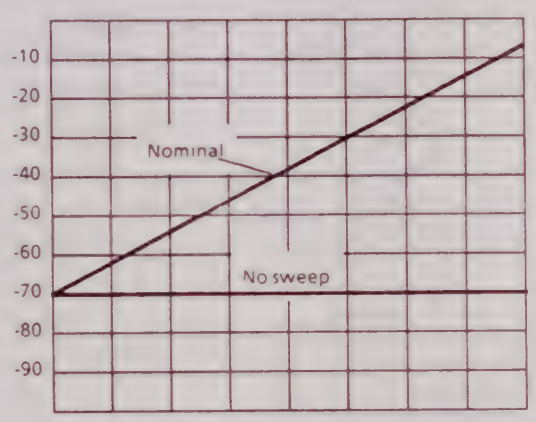

6.3.1 Troubleshooting Flow Chart

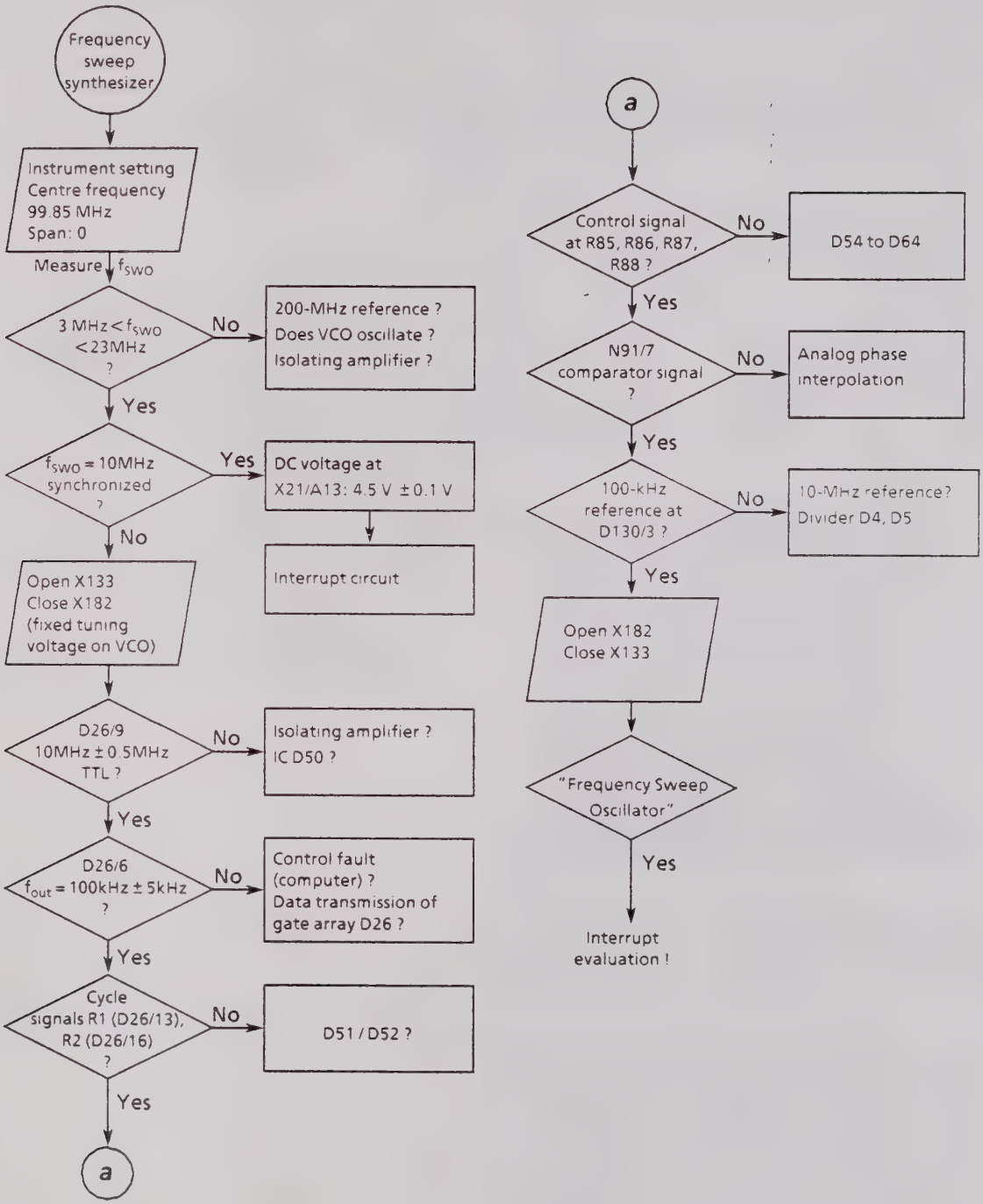

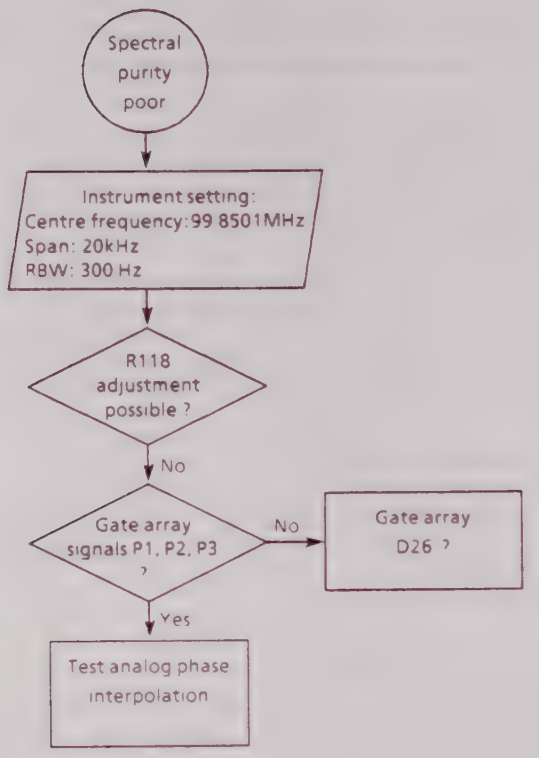

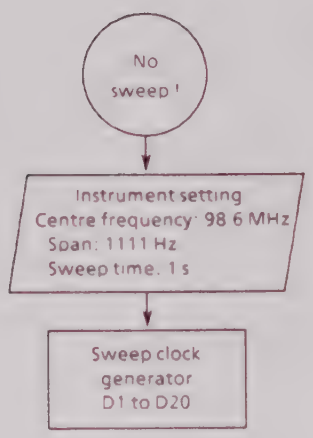

6.3.2 Measured Values and Diagrams

6.3.2.1 Interrupt Signal "Frequency Sweep Oscillator"

Generator 5 to 20 MHz

VCO for 205 to 220 MHz

Pin	V	Level (dBm)
V180/2	3 5 ± 1	--
V180/3	18 ± 1	--
N180/1	0	−10 ± 3
N180/5	–	0 ± 3
V181/2	1 ± 0.1	--
V181/3	7 ± 1	+ 8 ± 2

Isolating amplifier

Pin	V	Level (dBm)
V211/2 V230/2	1 ± 0 1	−20 ± 3
V211/3 V230/3	8.5 ± 1	−5 ± 3
V212/2 V231/2	1 ± 0.1	---
V212/3 V231/3	8.5 ± 1	+ 7 ± 3

Interrupt circuit

Pin	V
N160/6	4.5 ±0.1
N160/8	5.0 ±0.2
N160/9	4 ±0.2
N160/3	8 ±0.5

Function test:

- D160/6 (LEF): High (if not, reset D160 by means of positive pulse at D160/3 (RES)).
- Dampen VCO (by touching C186/C187) until oscillation ceases: D160/6: Low.
- Reset.

Gate array (D26) and current source control

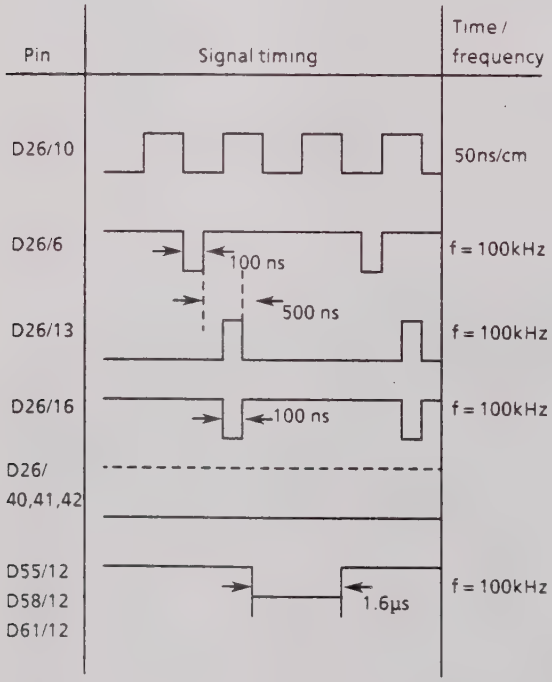

Analog phase interpolation

Pin	V	Pin	V
N92/6	0 ±10	N92/4	14.1 ±0.5
V90/1	1 ±0.1	N93/3	9 ±1
V92/1	4.5 ±0 5	N94/2	9.5 ±1
V91/1	5 ±0 3	N94/3	10.3 ±1
N93/4	8 2 ±1	V93/2	15 ±0.5

Compensation condition:

$|V(N92/4)|-|V(N93/3)| = V(V93/2) - V(N94/3) + V_0$

$V_0 = \pm 10^{-2}\,V$

Reference frequency divider

Pin	Frequency	V
V1/3	10 MHz	1
D4/7	1 MHz	TTL
D4/9	100 kHz	TTL
D5/9	100 kHz	TTL
D130/3	100 kHz	TTL

6.3.2.2 Spectral Purity Poor

Phase error signals P1, P2, P3

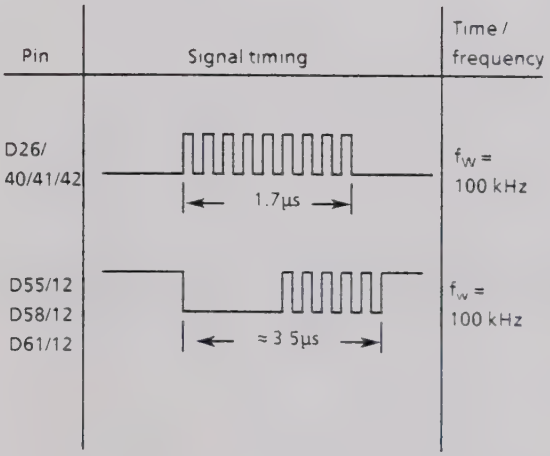

Analog phase interpolation

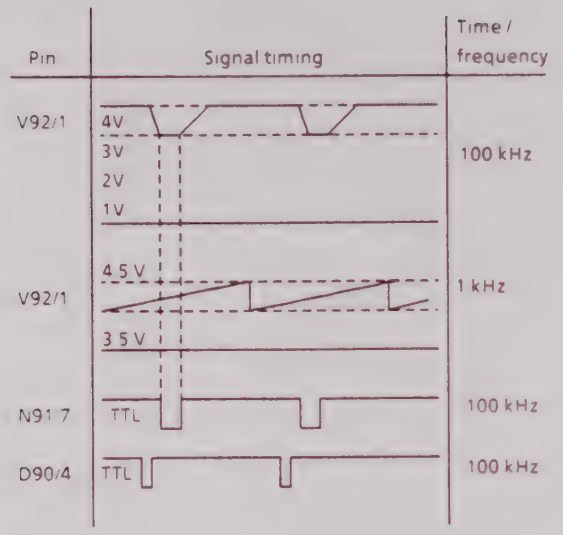

6.3.2.3 No Sweep

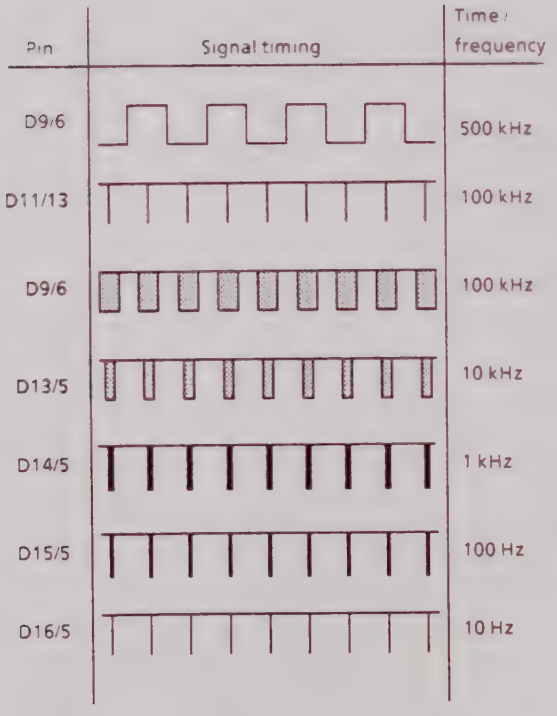

ROHDE&SCHWARZ

Schaltteillisten
Stromläufe
Bestückungspläne

Part lists
Circuit diagrams
Components plans

Listes des pièces détachées
Schémas de Circuit
Plans des composants

(R 29500 Bl 2)
895.1000 Bl. 2

Kennz. Comp.No.	Benennung Designation	Sachnummer Stock No.	Hersteller Manufacturer	Bezeichnung Designation	enthalten in contained in
C1	CC 10NF-20+50%7X8R4000 CAPACITOR	CC 087.7525	VALVO	2222 63051 64051103	
C2	CC 10NF-20+50%7X8R4000 CAPACITOR	CC 087.7525	VALVO	2222 63051 64051103	
C3	CC 10NF-20+50%7X8R4000 CAPACITOR	CC 087.7525	VALVO	2222 63051 64051103	
C4	CC 10NF-20+50%7X8R4000 CAPACITOR	CC 087.7525	VALVO	2222 63051 64051103	
C5	CC 10NF-20+50%7X8R4000 CAPACITOR	CC 087.7525	VALVO	2222 63051 64051103	
C6	CC 10NF-20+50%7X8R4000 CAPACITOR	CC 087.7525	VALVO	2222 63051 64051103	
C7	CC 10NF-20+50%7X8R4000 CAPACITOR	CC 087.7525	VALVO	2222 63051 64051103	
C8	CC 10NF-20+50%7X8R4000 CAPACITOR	CC 087.7525	VALVO	2222 63051 64051103	
C9	CC 10NF-20+50%7X8R4000 CAPACITOR	CC 087.7525	VALVO	2222 63051 64051103	
C10	CC 10NF-20+50%7X8R4000 CAPACITOR	CC 087.7525	VALVO	2222 63051 64051103	
C11	CC 10NF-20+50%7X8R4000 CAPACITOR	CC 087.7525	VALVO	2222 63051 64051103	
C12	CC 10NF-20+50%7X8R4000 CAPACITOR	CC 087.7525	VALVO	2222 63051 64051103	
C13	CC 10NF-20+50%7X8R4000 CAPACITOR	CC 087.7525	VALVO	2222 63051 64051103	
C14	CC 10NF-20+50%7X8R4000 CAPACITOR	CC 087.7525	VALVO	2222 63051 64051103	
C15	CC 10NF-20+50%7X8R4000 CAPACITOR	CC 087.7525	VALVO	2222 63051 64051103	
C16	CC 10NF-20+50%7X8R4000 CAPACITOR	CC 087.7525	VALVO	2222 63051 64051103	
C17	CC 10NF-20+50%7X8R4000 CAPACITOR	CC 087.7525	VALVO	2222 63051 64051103	
C18	CC 10NF-20+50%7X8R4000 CAPACITOR	CC 087.7525	VALVO	2222 63051 64051103	
C20	CC 10NF-20+50%7X8R4000 CAPACITOR	CC 087.7525	VALVO	2222 63051 64051103	
C29	CC 1NF+-10%63V K2000 CERAMIC CAPACITOR	CC 022.0784	VALVO	2222 63051 102	
C30	CK 100NF+-5%63V5RM MKT CAPACITOR	CK 099.2930	WIMA	MKS/2/63/0,1UF/5%	
C31	CE 100UF-10+50% 16V 9X13 ELECTROLYTIC CAPACITOR	CE 006.7165	ROEDERST	EK 00CB 310 D	
C32	CE 100UF-10+50% 16V 9X13 ELECTROLYTIC CAPACITOR	CE 006.7165	ROEDERST	EK 00CB 310 D	
C33	CK 100NF+-5%63V5RM MKT CAPACITOR	CK 099.2930	WIMA	MKS/2/63/0,1UF/5%	
C34	CE 100UF-10+50% 16V 9X13 ELECTROLYTIC CAPACITOR	CE 006.7165	ROEDERST	EK 00CB 310 D	
C35	CK 100NF+-5%63V5RM MKT CAPACITOR	CK 099.2930	WIMA	MKS/2/63/0,1UF/5%	
C37	CK 100NF+-5%63V5RM MKT CAPACITOR	CK 099.2930	WIMA	MKS/2/63/0,1UF/5%	
C38	CE 100UF-10+50% 16V 9X13 ELECTROLYTIC CAPACITOR	CE 006.7165	ROEDERST	EK 00CB 310 D	
C39	CC 10NF-20+50%7X8R4000 CAPACITOR	CC 087.7525	VALVO	2222 63051 64051103	
C40	CC 10NF-20+50%7X8R4000 CAPACITOR	CC 087.7525	VALVO	2222 63051 64051103	
C41	CC 10NF-20+50%7X8R4000 CAPACITOR	CC 087.7525	VALVO	2222 63051 64051103	
C42	CC 10NF-20+50%7X8R4000 CAPACITOR	CC 087.7525	VALVO	2222 63051 64051103	
C52	CE 22 UF+-20% 6V 7X 4X 8 ELECTROLYTIC CAPACITOR	CE 022.8033	ROEDERSTEI	ETR 2 22/6,3 20%	
C53	CC 10NF-20+50%7X8R4000 CAPACITOR	CC 087.7525	VALVO	2222 63051 64051103	
C54	CC 10NF-20+50%7X8R4000 CAPACITOR	CC 087.7525	VALVO	2222 63051 64051103	
C55	CC 10NF-20+50%7X8R4000 CAPACITOR	CC 087.7525	VALVO	2222 63051 64051103	
C56	CC 10NF-20+50%7X8R4000 CAPACITOR	CC 087.7525	VALVO	2222 63051 64051103	
C57	CC 10NF-20+50%7X8R4000 CAPACITOR	CC 087.7525	VALVO	2222 63051 64051103	
C58	CC 10NF-20+50%7X8R4000 CAPACITOR	CC 087.7525	VALVO	2222 63051 64051103	

Für diese Unterlage behalten wir
alle Rechte vor

Kennz. Comp.No.	Benennung Designation	Sachnummer Stock No.	Hersteller Manufacturer	Bezeichnung Designation	enthalten in contained in
C59	CC 10NF-20+50%7X8R4000 CAPACITOR	CC 087.7525	VALVO	2222 63051 64051103	
C60	CC 10NF-20+50%7X8R4000 CAPACITOR	CC 087.7525	VALVO	2222 63051 64051103	
C61	CC 10NF-20+50%7X8R4000 CAPACITOR	CC 087.7525	VALVO	2222 63051 64051103	
C62	CC 10NF-20+50%7X8R4000 CAPACITOR	CC 087.7525	VALVO	2222 63051 64051103	
C63	CC 10NF-20+50%7X8R4000 CAPACITOR	CC 087.7525	VALVO	2222 63051 64051103	
C64	CE 22 UF+-20% 6V 7X 4X 8 ELECTROLYTIC CAPACITOR	CE 022.8033	ROEDERSTEI	ETR 2 22/6,3 20%	
C65	CK 100NF+-5%63V5RM MKT CAPACITOR	CK 099.2930	WIMA	MKS/2/63/0,1UF/5%	
C66	CE 100UF-10+50% 16V 9X13 ELECTROLYTIC CAPACITOR	CE 006.7165	ROEDERST	EK 00CB 310 D	
C67	CC 22PF+-2%3X4N750 CAPACITOR	CC 087.6829	VALVO	2222 678 58229	
C68	CC 22PF+-2%3X4N750 CAPACITOR	CC 087.6829	VALVO	2222 678 58229	
C69	CK 100NF+-5%63V5RM MKT CAPACITOR	CK 099.2930	WIMA	MKS/2/63/0,1UF/5%	
C70	CE 100UF-10+50% 16V 9X13 ELECTROLYTIC CAPACITOR	CE 006.7165	ROEDERST	EK 00CB 310 D	
C71	CC 10NF-20+50%7X8R4000 CAPACITOR	CC 087.7525	VALVO	2222 63051 64051103	
C72	CC 10NF-20+50%7X8R4000 CAPACITOR	CC 087.7525	VALVO	2222 63051 64051103	
C73	CC 10NF-20+50%7X8R4000 CAPACITOR	CC 087.7525	VALVO	2222 63051 64051103	
C74	CC 10NF-20+50%7X8R4000 CAPACITOR	CC 087.7525	VALVO	2222 63051 64051103	
C75	CC 10PF+-0,25PF3X4N750 CAPACITOR	CC 087.6787	VALVO	2222 678 57109	
C76	CC 10PF+-0,25PF3X4N750 CAPACITOR	CC 087.6787	VALVO	2222 678 57109	
C77	CC 22PF+-2%3X4N750 CAPACITOR	CC 087.6829	VALVO	2222 678 58229	
C78	CC 220PF+-2%6X7N750 CAPACITOR	CC 087.6941	VALVO	2222 678 58221	
C79	CC 22PF+-2%3X4N750 CAPACITOR	CC 087.6829	VALVO	2222 678 58229	
C80	CC 220PF+-2%6X7N750 CAPACITOR	CC 087.6941	VALVO	2222 678 58221	
C81	CC 22PF+-2%3X4N750 CAPACITOR	CC 087.6829	VALVO	2222 678 58229	
C82	CC 220PF+-2%6X7N750 CAPACITOR	CC 087.6941	VALVO	2222 678 58221	
C83	CC 22PF+-2%3X4N750 CAPACITOR	CC 087.6829	VALVO	2222 678 58229	
C84	CC 220PF+-2%6X7N750 CAPACITOR	CC 087.6941	VALVO	2222 678 58221	
C85	CC 10NF-20+50%7X8R4000 CAPACITOR	CC 087.7525	VALVO	2222 63051 64051103	
C86	CC 10NF-20+50%7X8R4000 CAPACITOR	CC 087.7525	VALVO	2222 63051 64051103	
C89	CK 100NF+-5%63V5RM MKT CAPACITOR	CK 099.2930	WIMA	MKS/2/63/0,1UF/5%	
C90	CC 10NF-20+50%7X8R4000 CAPACITOR	CC 087.7525	VALVO	2222 63051 64051103	
C91	CK 100NF+-5%63V5RM MKT CAPACITOR	CK 099.2930	WIMA	MKS/2/63/0,1UF/5%	
C92	CK 100NF+-5%63V5RM MKT CAPACITOR	CK 099.2930	WIMA	MKS/2/63/0,1UF/5%	
C93	CE 100UF-10+50% 16V 9X13 ELECTROLYTIC CAPACITOR	CE 006.7165	ROEDERST	EK 00CB 310 D	
C94	CE 100UF-10+50% 16V 9X13 ELECTROLYTIC CAPACITOR	CE 006.7165	ROEDERST	EK 00CB 310 D	
C95	CC 10NF-20+50%7X8R4000 CAPACITOR	CC 087.7525	VALVO	2222 63051 64051103	
C96	CK 2,2NF +-1% 100V RM5 KP POLYPROPYLENE CAPACITOR	CK 007.7617	ROE	KP1830-222/011-R	
C97	CC 10NF-20+50%7X8R4000 CAPACITOR	CC 087.7525	VALVO	2222 63051 64051103	
C99	CC 22PF+-2%3X4N750 CAPACITOR	CC 087.6829	VALVO	2222 678 58229	
C100	CE 10UF+-20%25V SAL ELECTR.CAPACITOR	CE 007.3934	VALVO	2222 122 30006	

Kennz. Comp.No.	Benennung Designation	Sachnummer Stock No.	Hersteller Manufacturer	Bezeichnung Designation	enthalten in contained in
C101	CC 10NF-20+50%7X8R4000 CAPACITOR	CC 087.7525	VALVO	2222 63051 64051103	
C102	CC 10NF-20+50%7X8R4000 CAPACITOR	CC 087.7525	VALVO	2222 63051 64051103	
C103	CC 10NF+-10%50V X7R 1206 CERAMIC CHIP CAPACITOR	CC 099.8521	VITRAMON	VJ1206 Y 103 K FAT	
C104	CC 10NF+-10%50V X7R 1206 CERAMIC CHIP CAPACITOR	CC 099.8521	VITRAMON	VJ1206 Y 103 K FAT	
C105	CC 10NF+-10%50V X7R 1206 CERAMIC CHIP CAPACITOR	CC 099.8521	VITRAMON	VJ1206 Y 103 K FAT	
C106	CC 1UF+-10%50V7K1200VIEL CAPACITOR	084.5538	UNION CARB	CK06BX105K	
C109	CE 10UF+-20%25V SAL ELECTR.CAPACITOR	CE 007.3934	VALVO	2222 122 30006	
C110	CC 10NF-20+50%7X8R4000 CAPACITOR	CC 087.7525	VALVO	2222 63051 64051103	
C111	CC 10NF-20+50%7X8R4000 CAPACITOR	CC 087.7525	VALVO	2222 63051 64051103	
C112	CE 47UF-10+50% 40V 9X13 ELECTROLYTIC CAPACITOR	CE 006.7142	ROEDERST	EK 00 CB 247 G	
C113	CE 10UF+-20%25V SAL ELECTR.CAPACITOR	CE 007.3934	VALVO	2222 122 30006	
C114	CC 10NF-20+50%7X8R4000 CAPACITOR	CC 087.7525	VALVO	2222 63051 64051103	
C115	CC 10NF-20+50%7X8R4000 CAPACITOR	CC 087.7525	VALVO	2222 63051 64051103	
C116	CE 47UF-10+50% 40V 9X13 ELECTROLYTIC CAPACITOR	CE 006.7142	ROEDERST	EK 00 CB 247 G	
C117	CK 100NF+-5%63V5RM MKT CAPACITOR	CK 099.2930	WIMA	MKS/2/63/0.1UF/5%	
C118	CC 10NF-20+50%7X8R4000 CAPACITOR	CC 087.7525	VALVO	2222 63051 64051103	
C119	CC 10NF-20+50%7X8R4000 CAPACITOR	CC 087.7525	VALVO	2222 63051 64051103	
C120	CC 10NF-20+50%7X8R4000 CAPACITOR	CC 087.7525	VALVO	2222 63051 64051103	
C121	CC 10NF-20+50%7X8R4000 CAPACITOR	CC 087.7525	VALVO	2222 63051 64051103	
C122	CK 100NF+-5%63V5RM MKT CAPACITOR	CK 099.2930	WIMA	MKS/2/63/0.1UF/5%	
C123	CC 100NF+-10%50V X7R 1206 CERAMIC CHIP CAPACITOR	CC 007.5237	VITRAMON	VJ1206 Y 104 K FAT	
C124	CC 100NF+-10%50V X7R 1206 CERAMIC CHIP CAPACITOR	CC 007.5237	VITRAMON	VJ1206 Y 104 K FAT	
C132	CC 10NF-20+50%7X8R4000 CAPACITOR	CC 087.7525	VALVO	2222 63051 64051103	
C133	CC 22PF+-2%3X4N750 CAPACITOR	CC 087.6829	VALVO	2222 678 58229	
C134	CE 100UF-10+50% 16V 9X13 ELECTROLYTIC CAPACITOR	CE 006.7165	ROEDERST	EK 00CB 310 D	
C135	CC 22 NF+-10% 50V5K1200LR CAPACITOR	092.0690	AEROVOX	CKR05BX223KLEVELR	
C136	CC 1NF+-10%63V K2000 CERAMIC CAPACITOR	CC 022.0784	VALVO	2222 63051 102	
C137	CK 220NF+-5%63V5RM MKT CAPACITOR	CK 099.2952	WIMA	MKS2/63/0.22UF/5%	
C138	CC 22 NF+-10% 50V5K1200LR CAPACITOR	092.0690	AEROVOX	CKR05BX223KLEVELR	
C139	CK 220NF+-5%63V5RM MKT CAPACITOR	CK 099.2952	WIMA	MKS2/63/0.22UF/5%	
C140	CC 1NF+-10%63V K2000 CERAMIC CAPACITOR	CC 022.0784	VALVO	2222 63051 102	
C141	CK 22NF+-5%63V5RM MKT CAPACITOR	CK 099.2881	WIMA	MKS2/63/0.022UF/5%	
C142	CC 2.7NF+-10%5X6R2000 CAPACITOR	CC 087.7077	VALVO	2222 63051 272	
C143	CK 22NF+-5%63V5RM MKT CAPACITOR	CK 099.2881	WIMA	MKS2/63/0.022UF/5%	
C144	CE 2.2UF+-20%20V 5X 4X 7 ELECTROLYTIC CAPACITOR	CE 022.8104	ROEDERSTEI	ETR 1 2.2/20 20%	
C149	CC 4.7NF+-10%6X9R2000 CAPACITOR	CC 087.7102	VALVO	2222 63051 472	
C150	CC 10NF-20+50%7X8R4000 CAPACITOR	CC 087.7525	VALVO	2222 63051 64051103	
C160	CK 100NF+-5%63V5RM MKT CAPACITOR	CK 099.2930	WIMA	MKS/2/63/0.1UF/5%	
C161	CK 100NF+-5%63V5RM MKT CAPACITOR	CK 099.2930	WIMA	MKS/2/63/0.1UF/5%	

Für diese Unterlage behalten wir alle Rechte vor

Kennz. Comp.No.	Benennung Designation	Sachnummer Stock No.	Hersteller Manufacturer	Bezeichnung Designation	enthalten in contained in
C162	CK 100NF+-5%63V5RM MKT CAPACITOR	CK 099.2930	WIMA	MKS/2/63/0,1UF/5%	
C163	CK 100NF+-5%63V5RM MKT CAPACITOR	CK 099.2930	WIMA	MKS/2/63/0,1UF/5%	
C164	CK 100NF+-5%63V5RM MKT CAPACITOR	CK 099.2930	WIMA	MKS/2/63/0,1UF/5%	
C180	CC 10NF-20+50%7X8R4000 CAPACITOR	CC 087.7525	VALVO	2222 63051 64051103	
C181	CC 22 NF+-10% 50V5K1200LR CAPACITOR	092.0690	AEROVOX	CKR05BX223KLEVELR	
C182	CC 10NF-20+50%7X8R4000 CAPACITOR	CC 087.7525	VALVO	2222 63051 64051103	
C183	CC 10NF-20+50%7X8R4000 CAPACITOR	CC 087.7525	VALVO	2222 63051 64051103	
C184	CC 7PF+-0,25PF P100/1B3R CERAMIC CAPACITOR	006.1050	DRALORIC	P100/7/0,25RR3X10LC	
C185	CT 9PF 250V LUFTTR.KONZ. AIR TRIMMER	CT 564.6885	TEKELEC	AT 5276	
C186	CC 5 PF+-0,5PF5N033 CERAMIC CAPACITOR	CC 006.0131	DRALORIC	N033/1B5/0,5SDPN	
C187	CC 15PF+- 5%100V NP0 VIEL CERAMIC CAPACITOR	CC 060.0671	UNIONCARB	C052C150J2G1CA	
C188	CC 390NF+-10% 50V8K1200LR CAPACITOR	092.0960	AEROVOX	CKR06BX394KLEVELR	
C189	CK 100NF+-5%63V5RM MKT CAPACITOR	CK 099.2930	WIMA	MKS/2/63/0,1UF/5%	
C190	CC 15PF+- 5%100V NP0 VIEL CERAMIC CAPACITOR	CC 060.0671	UNIONCARB	C052C150J2G1CA	
C191	CC 47PF+- 5%100V NP0 VIEL CERAMIC CAPACITOR	CC 060.0736	UNIONCARB	C052C470J2G1CA	
C193	CC 10NF-20+50%7X8R4000 CAPACITOR	CC 087.7525	VALVO	2222 63051 64051103	
C194	CC 10NF-20+50%7X8R4000 CAPACITOR	CC 087.7525	VALVO	2222 63051 64051103	
C195	CK 100NF+-5%63V5RM MKT CAPACITOR	CK 099.2930	WIMA	MKS/2/63/0,1UF/5%	
C196	CC 10NF-20+50%7X8R4000 CAPACITOR	CC 087.7525	VALVO	2222 63051 64051103	
C197	CC 12PF+-2%3X4NP0 CAPACITOR	CC 087.6435	VALVO	2222 678 10129	
C198	CK 100NF+-5%63V5RM MKT CAPACITOR	CK 099.2930	WIMA	MKS/2/63/0,1UF/5%	
C199	CE 100UF-10+50% 16V 9X13 ELECTROLYTIC CAPACITOR	CE 006.7165	ROEDERST	EK 00CB 310 D	
C200	CC 1NF+-10%63V K2000 CERAMIC CAPACITOR	CC 022.0784	VALVO	2222 63051 102	
C201	CC 220PF+-2%6X7N750 CAPACITOR	CC 087.6941	VALVO	2222 678 58221	
C208	CC 33PF+-1%50V NP0 1206 CERAMIC CHIP CAPACITOR	CC 099.8780	VITRAMON	VJ1206 A330F FAT	
C209	CC 33PF+-1%50V NP0 1206 CERAMIC CHIP CAPACITOR	CC 099.8780	VITRAMON	VJ1206 A330F FAT	
C210	CE 100UF-10+50% 16V 9X13 ELECTROLYTIC CAPACITOR	CE 006.7165	ROEDERST	EK 00CB 310 D	
C211	CC 10NF-20+50%7X8R4000 CAPACITOR	CC 087.7525	VALVO	2222 63051 64051103	
C212	CC 10NF-20+50%7X8R4000 CAPACITOR	CC 087.7525	VALVO	2222 63051 64051103	
C213	CC 220PF+-2%6X7N750 CAPACITOR	CC 087.6941	VALVO	2222 678 58221	
C214	CC 10NF-20+50%7X8R4000 CAPACITOR	CC 087.7525	VALVO	2222 63051 64051103	
C216	CC 10NF-20+50%7X8R4000 CAPACITOR	CC 087.7525	VALVO	2222 63051 64051103	
C217	CC 10NF-20+50%7X8R4000 CAPACITOR	CC 087.7525	VALVO	2222 63051 64051103	
C218	CC 10NF-20+50%7X8R4000 CAPACITOR	CC 087.7525	VALVO	2222 63051 64051103	
C220	CC 10NF-20+50%7X8R4000 CAPACITOR	CC 087.7525	VALVO	2222 63051 64051103	
C221	CK 100NF+-5%63V5RM MKT CAPACITOR	CK 099.2930	WIMA	MKS/2/63/0,1UF/5%	
C223	CC 10NF-20+50%7X8R4000 CAPACITOR	CC 087.7525	VALVO	2222 63051 64051103	
C224	CC 10NF-20+50%7X8R4000 CAPACITOR	CC 087.7525	VALVO	2222 63051 64051103	
C225	CC 10NF-20+50%7X8R4000 CAPACITOR	CC 087.7525	VALVO	2222 63051 64051103	

Kennz. Comp.No.	Benennung Designation	Sachnummer Stock No.	Hersteller Manufacturer	Bezeichnung Designation	enthalten in contained in
C228	CC 33PF+-1%50V NPO 1206 CERAMIC CHIP CAPACITOR	CC 099.8780	VITRAMON	VJ1206 A330F FAT	
C229	CC 33PF+-1%50V NPO 1206 CERAMIC CHIP CAPACITOR	CC 099.8780	VITRAMON	VJ1206 A330F FAT	
C230	CC 10NF-20+50%7X8R4000 CAPACITOR	CC 087.7525	VALVO	2222 63051 64051103	
C231	CC 10NF-20+50%7X8R4000 CAPACITOR	CC 087.7525	VALVO	2222 63051 64051103	
C232	CC 10NF-20+50%7X8R4000 CAPACITOR	CC 087.7525	VALVO	2222 63051 64051103	
C234	CC 10NF-20+50%7X8R4000 CAPACITOR	CC 087.7525	VALVO	2222 63051 64051103	
C235	CC 10NF-20+50%7X8R4000 CAPACITOR	CC 087 7525	VALVO	2222 63051 64051103	
C236	CC 10NF-20+50%7X8R4000 CAPACITOR	CC 087.7525	VALVO	2222 63051 64051103	
C238	CC 10NF-20+50%7X8R4000 CAPACITOR	CC 087.7525	VALVO	2222 63051 64051103	
C240	CC 10NF-20+50%7X8R4000 CAPACITOR	CC 087.7525	VALVO	2222 63051 64051103	
C241	CE 100UF-10+50% 16V 9X13 ELECTROLYTIC CAPACITOR	CE 006.7165	ROEDERST	EK 00CB 310 D	
C242	CC 10NF-20+50%7X8R4000 CAPACITOR	CC 087.7525	VALVO	2222 63051 64051103	
C243	CC 10NF-20+50%7X8R4000 CAPACITOR	CC 087.7525	VALVO	2222 63051 64051103	
C250	CC 10NF-20+50%7X8R4000 CAPACITOR	CC 087.7525	VALVO	2222 63051 64051103	
C251	CC 10NF-20+50%7X8R4000 CAPACITOR	CC 087.7525	VALVO	2222 63051 64051103	
C252	CC 10NF-20+50%7X8R4000 CAPACITOR	CC 087.7525	VALVO	2222 63051 64051103	
C253	CC 10NF-20+50%7X8R4000 CAPACITOR	CC 087.7525	VALVO	2222 63051 64051103	
C254	CC 10NF-20+50%7X8R4000 CAPACITOR	CC 087.7525	VALVO	2222 63051 64051103	
C255	CC 10NF-20+50%7X8R4000 CAPACITOR	CC 087.7525	VALVO	2222 63051 64051103	
C256	CC 10NF-20+50%7X8R4000 CAPACITOR	CC 087.7525	VALVO	2222 63051 64051103	
C257	CC 10NF-20+50%7X8R4000 CAPACITOR	CC 087.7525	VALVO	2222 63051 64051103	
C258	CC 10NF-20+50%7X8R4000 CAPACITOR	CC 087.7525	VALVO	2222 63051 64051103	
C259	CC 10NF-20+50%7X8R4000 CAPACITOR	CC 087.7525	VALVO	2222 63051 64051103	
C260	CC 10NF-20+50%7X8R4000 CAPACITOR	CC 087.7525	VALVO	2222 63051 64051103	
C261	CK 100NF+-5%63V5RM MKT CAPACITOR	CK 099.2930	WIMA	MKS/2/63/0,1UF/5%	
C280	CC 10NF-20+50%7X8R4000 CAPACITOR	CC 087.7525	VALVO	2222 63051 64051103	
C281	CC 10NF-20+50%7X8R4000 CAPACITOR	CC 087.7525	VALVO	2222 63051 64051103	
D1	BL MM74HC390N 2X4B.COUNT DUAL 4-BIT DECADE COUNTER	BL 099.9640	NSC	MM74HC390N	
D2	BL MM74HC390N 2X4B.COUNT DUAL 4-BIT DECADE COUNTER	BL 099.9640	NSC	MM74HC390N	
D3	BL MM74HC390N 2X4B.COUNT DUAL 4-BIT DECADE COUNTER	BL 099.9640	NSC	MM74HC390N	
D4	BL MM74HC390N 2X4B.COUNT DUAL 4-BIT DECADE COUNTER	BL 099.9640	NSC	MM74HC390N	
D5	BL MM74HC74N 2XD-FLIPFL DUAL D FLIP-FLOP	BL 571.3171	NSC	MM74HC74N	
D6	BL MM74HC74N 2XD-FLIPFL DUAL D FLIP-FLOP	BL 571.3171	NSC	MM74HC74N	
D7	BL SN74LS377N 8B-D-REGIST IC-SN74LS377N	345.6552	TEXAS	SN74LS377N	
D8	BL SN74LS377N 8B-D-REGIST IC-SN74LS377N	345.6552	TEXAS	SN74LS377N	
D9	BL MM74HC151N 8CH.DIGMUX 8CHANNEL DIGITAL MUX	BL 395.2967	NSC	MM74HC151N	
D10	BL 74F192PC U/D-DEC.COUNT UP/DOWN DECADE COUNTER	BL 099.9934	FAIRCHILD	74F192PC	
D11	BL 74F192PC U/D-DEC.COUNT UP/DOWN DECADE COUNTER	BL 099.9934	FAIRCHILD	74F192PC	

Für diese Unterlage behalten wir alle Rechte vor

Kennz. Comp.No.	Benennung Designation	Sachnummer Stock No.	Hersteller Manufacturer	Bezeichnung Designation	enthalten in contained in
D12	BL MM74HC74N 2XD-FLIPFL DUAL D FLIP-FLOP	BL 571.3171	NSC	MM74HC74N	
D13	BL SN74167N DEC.DIVIDER PROGR.DECIMAL DIVIDER	810.0052	TEXAS	SN74167N	
D14	BL SN74167N DEC.DIVIDER PROGR.DECIMAL DIVIDER	810.0052	TEXAS	SN74167N	
D15	BL SN74167N DEC.DIVIDER PROGR.DECIMAL DIVIDER	810.0052	TEXAS	SN74167N	
D16	BL SN74167N DEC.DIVIDER PROGR.DECIMAL DIVIDER	810.0052	TEXAS	SN74167N	
D17	BL SN74LS377N 8B-D-REGIST IC-SN74LS377N	345.6552	TEXAS	SN74LS377N	
D18	BL SN74LS377N 8B-D-REGIST IC-SN74LS377N	345.6552	TEXAS	SN74LS377N	
D20	BL SN74LS20N 2/4INP.NAND IC NAND GATE SN74LS20N	266.2055	TEXAS	SN74LS20N	
D26	BG SCX6225QLZ GATEARRAY GATE ARRAY	007.4947	NATIONAL	SCX6225QLZ	
D50	BL 74F00PC 4X2IN.NANDG QUAD-NAND-GATE	BL 344.6659	FAIRCHILD	74F00PC	
D51	BL 74F74PC 2XD-FLIPFLOP DUAL D-FLIPFLOP	BL 344.6694	FAIRCHILD	74F74PC	
D52	BL 74F175PC 4XD-FLIPF. QUAD D FLIP-FLOP	BL 344.7355	FAIRCHILD	74F175PC	
D53	BL 74F00PC 4X2IN.NANDG QUAD-NAND-GATE	BL 344.6659	FAIRCHILD	74F00PC	
D54	BL 74F00PC 4X2IN.NANDG QUAD-NAND-GATE	BL 344.6659	FAIRCHILD	74F00PC	
D55	BL 74F191PC U/D-BIN.CNT UP/DOWN BIN.-COUNTER	BL 344.6871	FAIRCHILD	74F191PC	
D56	BL 74F74PC 2XD-FLIPFLOP DUAL D-FLIPFLOP	BL 344.6694	FAIRCHILD	74F74PC	
D57	BL 74F00PC 4X2IN.NANDG QUAD-NAND-GATE	BL 344.6659	FAIRCHILD	74F00PC	
D58	BL 74F191PC U/D-BIN.CNT UP/DOWN BIN.-COUNTER	BL 344.6871	FAIRCHILD	74F191PC	
D59	BL 74F74PC 2XD-FLIPFLOP DUAL D-FLIPFLOP	BL 344.6694	FAIRCHILD	74F74PC	
D60	BL 74F00PC 4X2IN.NANDG QUAD-NAND-GATE	BL 344.6659	FAIRCHILD	74F00PC	
D61	BL 74F191PC U/D-BIN.CNT UP/DOWN BIN.-COUNTER	BL 344.6871	FAIRCHILD	74F191PC	
D62	BL 74F74PC 2XD-FLIPFLOP DUAL D-FLIPFLOP	BL 344.6694	FAIRCHILD	74F74PC	
D63	BL 74F00PC 4X2IN.NANDG QUAD-NAND-GATE	BL 344.6659	FAIRCHILD	74F00PC	
D64	BL 74F191PC U/D-BIN.CNT UP/DOWN BIN.-COUNTER	BL 344.6871	FAIRCHILD	74F191PC	
D90	BL 74F74PC 2XD-FLIPFLOP DUAL D-FLIPFLOP	BL 344.6694	FAIRCHILD	74F74PC	
D130	BL MC4044P PHASE-L-L PHASE LOCKED LOOP	BL 443.2980	MOTOROLA	MC4044P	
D160	BL SN74LS74AN 2/D-FLIPFL. IC FLIP-FLOP SN74LS74N	266.7934	TEXAS	SN74LS74N	
L1	LD 1,20UH10%0,180HMO,620A CHOKE	LD 067.2870	DELEVAN	DROSSEL1025-22	
L2	LD 1,20UH10%0,180HMO,620A CHOKE	LD 067.2870	DELEVAN	DROSSEL1025-22	
L31	LD 1,20UH10%0,180HMO,620A CHOKE	LD 067.2870	DELEVAN	DROSSEL1025-22	
L50	LD 1,20UH10%0,180HMO,620A CHOKE	LD 067.2870	DELEVAN	DROSSEL1025-22	
L51	LD 1,20UH10%0,180HMO,620A CHOKE	LD 067.2870	DELEVAN	DROSSEL1025-22	
L90	LD 1,20UH10%0,180HMO,620A CHOKE	LD 067.2870	DELEVAN	DROSSEL1025-22	
L91	LD 1,20UH10%0,180HMO,620A CHOKE	LD 067.2870	DELEVAN	DROSSEL1025-22	
L92	LD 1,20UH10%0,180HMO,620A CHOKE	LD 067.2870	DELEVAN	DROSSEL1025-22	
L130	LD 820 UH10%65,00HMO,029A CHOKE	LD 067.3218	DELEVAN	DROSSEL1025-90	
L133	LD 10 UH 10% 3R3 144 MA CHOKE	LD 026.4184	DELEVAN	DROSSEL1025-44	
L134	LD 1,20UH10%0,180HMO,620A CHOKE	LD 067.2870	DELEVAN	DROSSEL1025-22	

Kennz. Comp.No.	Benennung Designation	Sachnummer Stock No.	Hersteller Manufacturer	Bezeichnung Designation	enthalten in contained in
L180	LD 10 UH 10% 3R3 144 MA CHOKE	LD 026.4184	DELEVAN	DROSSEL1025-44	
L181	LD 1,20UH10%O,180HMO,620A CHOKE	LD 067.2870	DELEVAN	DROSSEL1025-22	
L182	LD 10 UH 10% 3R3 144 MA CHOKE	LD 026.4184	DELEVAN	DROSSEL1025-44	
L183	LD 1,20UH10%O,180HMO,620A CHOKE	LD 067.2870	DELEVAN	DROSSEL1025-22	
L184	LD 10 UH 10% 3R3 144 MA CHOKE	LD 026.4184	DELEVAN	DROSSEL1025-44	
L185	LD 1,20UH10%O,180HMO,620A CHOKE	LD 067.2870	DELEVAN	DROSSEL1025-22	
L186	LD SPULE 53NH ?.5W FE-K CHOKE	300.6653	COMPONEX	E521HN-020023	
L187	LD 1,20UH10%O,180HMO,620A CHOKE	LD 067.2870	DELEVAN	DROSSEL1025-22	
L188	LD 1,20UH10%O,180HMO,620A CHOKE	LD 067.2870	DELEVAN	DROSSEL1025-22	
L189	LD 1,20UH10%O,180HMO,620A CHOKE	LD 067.2870	DELEVAN	DROSSEL1025-22	
L190	LD 1,20UH10%O,180HMO,620A CHOKE	LD 067.2870	DELEVAN	DROSSEL1025-22	
L200	LD 0,56UH10%O,500HMO,550A CHOKE	LD 067.2834	DELEVAN	DROSSEL1025-14	
L201	LD 1,20UH10%O,180HMO,620A CHOKE	LD 067.2870	DELEVAN	DROSSEL1025-22	
L202	LD 0,56UH10%O,500HMO,550A CHOKE	LD 067.2834	DELEVAN	DROSSEL1025-14	
L210	LD 4,70UH10%1,200HMO,239A CHOKE	LD 067.2940	DELEVAN	DROSSEL1025-36	
L211	LD 4,70UH10%1,200HMO,239A CHOKE	LD 067.2940	DELEVAN	DROSSEL1025-36	
L212	LD 4,70UH10%1,200HMO,239A CHOKE	LD 067.2940	DELEVAN	DROSSEL1025-36	
L213	LD 4,70UH10%1,200HMO,239A CHOKE	LD 067.2940	DELEVAN	DROSSEL1025-36	
L214	LD 1,20UH10%O,180HMO,620A CHOKE	LD 067.2870	DELEVAN	DROSSEL1025-22	
L230	LD 4,70UH10%1,200HMO,239A CHOKE	LD 067.2940	DELEVAN	DROSSEL1025-36	
L231	LD 4,70UH10%1,200HMO,239A CHOKE	LD 067.2940	DELEVAN	DROSSEL1025-36	
L232	LD 4,70UH10%1,200HMO,239A CHOKE	LD 067.2940	DELEVAN	DROSSEL1025-36	
L233	LD 4,70UH10%1,200HMO,239A CHOKE	LD 067.2940	DELEVAN	DROSSEL1025-36	
L234	LD 1,20UH10%O,180HMO,620A CHOKE	LD 067.2870	DELEVAN	DROSSEL1025-22	
L250 ..254	LD 1,20UH10%O,180HMO,620A CHOKE	LD 067.2870	DELEVAN	DROSSEL1025-22	
L280	LD 10 UH 10% 3R3 144 MA CHOKE	LD 026.4184	DELEVAN	DROSSEL1025-44	
N90	BO SE5534AFE LOW N.OPAMP OPERATIONAL AMPLIFIER	BO 301.3335	SIGNETICS	SE5534AFE	
N91	BO CMP05FP PREC COMPAR COMPARATOR	374.8050	PMI	CMP05FP	
N92	BO OP07CP PREC. OPAMP OPERATIONAL AMPLIFIER	BO 394.8884	PMI	OP07CP	
N93	AK CA3127E 5XN TR.ARRAY TRANSISTOR ARRAY	377.3836	RCA	CA3127E	
N94	AK MD7003A PNP 50V DUAL DUAL-TRANSISTOR	010.3360	MOTOROLA	MD7003A	
N130	BO SE5534AFE LOW N.OPAMP OPERATIONAL AMPLIFIER	BO 301.3335	SIGNETICS	SE5534AFE	
N160	BO TCA965 FENSTER-DISKR DISCRIMINATOR	BO 279.2213	SIEMENS	TCA965	
N180	BM MSA0304 BB.AMPL BROADBAND AMPLIFIER	840.6094	AVANTEK	MSA0304	
N200	BM SRA1 MIXER 0.5GHZ MIXER	BM 207.3465	MINICIRCUI	SRA1	
R1	RL 0,35W 2,74KOHM+-1%TK50 RESISTOR	RL 083.0926	DRALORIC	SMA0207/2,74K-F-D	
R2	RL 0,35W 100 OHM+-1%TK50 METALFILM-RESISTOR	RL 082.6543	DRALORIC	SMA0207/100/HM-F-D	
R3	RL 0,35W 1KOHM+-1%TK50 RESISTOR	RL 082.2160	DRALORIC	SMA0207/1K-F-C	

Für diese Unterlage behalten wir alle Rechte vor

Kennz. Comp.No.	Benennung Designation	Sachnummer Stock No.	Hersteller Manufacturer	Bezeichnung Designation	enthalten in contained in
R4	RL 0,35W 475 OHM+-1%TK50 RESISTOR	RL 083.0390	DRALORIC	SMA0207/4750HM-F-D	
R5	RL 0,35W 1KOHM+-1%TK50 RESISTOR	RL 082.2160	DRALORIC	SMA0207/1K-F-C	
R6	RL 0,35W 1KOHM+-1%TK50 RESISTOR	RL 082.2160	DRALORIC	SMA0207/1K-F-C	
R7	RL 0,35W 1KOHM+-1%TK50 RESISTOR	RL 082.2160	DRALORIC	SMA0207/1K-F-C	
R8	RL 0,35W 1KOHM+-1%TK50 RESISTOR	RL 082.2160	DRALORIC	SMA0207/1K-F-C	
R9	RL 0,35W 475 OHM+-1%TK50 RESISTOR	RL 083.0390	DRALORIC	SMA0207/4750HM-F-D	
R10	RL 0,35W 1KOHM+-1%TK50 RESISTOR	RL 082.2160	DRALORIC	SMA0207/1K-F-C	
R11	RL 0,35W 1KOHM+-1%TK50 RESISTOR	RL 082.2160	DRALORIC	SMA0207/1K-F-C	
R13	RL 0,35W 1KOHM+-1%TK50 RESISTOR	RL 082.2160	DRALORIC	SMA0207/1K-F-C	
R14	RL 0,35W 475 OHM+-1%TK50 RESISTOR	RL 083.0390	DRALORIC	SMA0207/4750HM-F-D	
R15	RL 0,35W 475 OHM+-1%TK50 RESISTOR	RL 083.0390	DRALORIC	SMA0207/4750HM-F-D	
R16	RL 0,35W 475 OHM+-1%TK50 RESISTOR	RL 083.0390	DRALORIC	SMA0207/4750HM-F-D	
R17	RL 0,35W 1KOHM+-1%TK50 RESISTOR	RL 082.2160	DRALORIC	SMA0207/1K-F-C	
R18	RL 0,35W 475 OHM+-1%TK50 RESISTOR	RL 083.0390	DRALORIC	SMA0207/4750HM-F-D	
R19	RL 0,35W 1KOHM+-1%TK50 RESISTOR	RL 082.2160	DRALORIC	SMA0207/1K-F-C	
R20	RL 0,35W 475 OHM+-1%TK50 RESISTOR	RL 083.0390	DRALORIC	SMA0207/4750HM-F-D	
R21	RL 0,35W 1KOHM+-1%TK50 RESISTOR	RL 082.2160	DRALORIC	SMA0207/1K-F-C	
R22	RL 0,35W 1KOHM+-1%TK50 RESISTOR	RL 082.2160	DRALORIC	SMA0207/1K-F-C	
R23	RL 0,35W 475 OHM+-1%TK50 RESISTOR	RL 083.0390	DRALORIC	SMA0207/4750HM-F-D	
R25	RL 0,35W 1KOHM+-1%TK50 RESISTOR	RL 082.2160	DRALORIC	SMA0207/1K-F-C	
R26	RL 0,21W 475 OHM+-1%TK50 RESISTOR	RL 092.1409	RESISTA	MK1 4750HM 1% TK50	
R27	RL 0,21W 475 OHM+-1%TK50 RESISTOR	RL 092.1409	RESISTA	MK1 4750HM 1% TK50	
R28	RL 0,21W 475 OHM+-1%TK50 RESISTOR	RL 092.1409	RESISTA	MK1 4750HM 1% TK50	
R29	RL 0,21W 10,0KOHM+-1%TK50 RESISTOR	RL 092.1567	RESISTA	MK1 10K0 1% TK50	
R30	RL 0,35W2,21 OHM+-1%TK50 METALFILMRESISTOR	RL 099.7948	RESISTA	MK2 2,21 OHM 1% TK50	
R32	RL 0,35W 100 OHM+-1%TK50 METALFILM-RESISTOR	RL 082.6543	DRALORIC	SMA0207/100/HM-F-D	
R33	RL 0,35W 100 OHM+-1%TK50 METALFILM-RESISTOR	RL 082.6543	DRALORIC	SMA0207/100/HM-F-D	
R34	RL 0,35W 1,50KOHM+-1%TK50 RESISTOR	RL 083.0732	DRALORIC	SMA0207/1,50K-F-D	
R35	RL 0,35W 2,21KOHM+-1%TK50 RESISTOR	RL 082.2477	DRALORIC	SMA 0207/2,21K-F-C	
R36	RL 0,35W2,21 OHM+-1%TK50 METALFILMRESISTOR	RL 099.7948	RESISTA	MK2 2,21 OHM 1% TK50	
R37	RL 0,35W 1,0 OHM+-1%TK50 METALFILMRESISTOR	RL 099.7860	RESISTA	MK2 1,00 OHM 1% TK50	
R38	RL 0,35W 1,0 OHM+-1%TK50 METALFILMRESISTOR	RL 099.7860	RESISTA	MK2 1,00 OHM 1% TK50	
R39	RL 0,35W 100 OHM+-1%TK50 METALFILM-RESISTOR	RL 082.6543	DRALORIC	SMA0207/100/HM-F-D	
R40	RL 0,35W 100 OHM+-1%TK50 METALFILM-RESISTOR	RL 082.6543	DRALORIC	SMA0207/100/HM-F-D	
R41	RL 0,35W2,21 OHM+-1%TK50 METALFILMRESISTOR	RL 099.7948	RESISTA	MK2 2,21 OHM 1% TK50	
R44	RL 0,21W 1,21KOHM+-1%TK50 RESISTOR	RL 092.1450	RESISTA	MK1 1K21 1% TK50	
R45	RL 0,21W 10,0 OHM+-1%TK50 RESISTOR	RL 092.1715	RESISTA	MK1 10,00HM 1% TK50	
R46	RL 0,21W 2,21KOHM+-1%TK50 RESISTOR	RL 092.1480	RESISTA	MK1 2K21 1% TK50	
R47	RG 1000 OHM+-1%TK100 1206 CHIP RESISTOR	RG 006.7271	DALE	CRCW1206-10 1K F-T	

Kennz. Comp.No.	Benennung Designation	Sachnummer Stock No.	Hersteller Manufacturer	Bezeichnung Designation	enthalten in contained in
R48	RG 475 OHM+-1%TK100 1206 RESISTOR CHIP	RG 007.5695	DALE	CRCW1206-10 475R F-T	
R50	RL 0,35W 10,0 OHM+-1%TK50 RESISTOR	RL 082.8852	DRALORIC	SMA0207/100HM-F-D	
R51	RL 0,35W 10,0 OHM+-1%TK50 RESISTOR	RL 082.8852	DRALORIC	SMA0207/100HM-F-D	
R52	RL 0,35W 100 OHM+-1%TK50 METALFILM-RESISTOR	RL 082.6543	DRALORIC	SMA0207/100/HM-F-D	
R53	RL 0,35W 100 OHM+-1%TK50 METALFILM-RESISTOR	RL 082.6543	DRALORIC	SMA0207/100/HM-F-D	
R54	RL 0,35W 100 OHM+-1%TK50 METALFILM-RESISTOR	RL 082.6543	DRALORIC	SMA0207/100/HM-F-D	
R55	RL 0,35W 100 OHM+-1%TK50 METALFILM-RESISTOR	RL 082.6543	DRALORIC	SMA0207/100/HM-F-D	
R56	RL 0,35W 100 OHM+-1%TK50 METALFILM-RESISTOR	RL 082.6543	DRALORIC	SMA0207/100/HM-F-D	
R57	RL 0,35W 2,74 OHM+-1%TK50 METALFILMRESISTOR	RL 099.8973	RESISTA	MK2 2,74 OHM+-1%TK50	
R58	RL 0,35W 1,50KOHM+-1%TK50 RESISTOR	RL 083.0732	DRALORIC	SMA0207/1,50K-F-D	
R59	RL 0,35W 2,21KOHM+-1%TK50 RESISTOR	RL 082.2477	DRALORIC	SMA 0207/2,21K-F-C	
R60	RL 0,35W 100 OHM+-1%TK50 METALFILM-RESISTOR	RL 082.6543	DRALORIC	SMA0207/100/HM-F-D	
R61	RL 0,35W 100 OHM+-1%TK50 METALFILM-RESISTOR	RL 082.6543	DRALORIC	SMA0207/100/HM-F-D	
R62	RL 0,35W 100 OHM+-1%TK50 METALFILM-RESISTOR	RL 082.6543	DRALORIC	SMA0207/100/HM-F-D	
R63	RL 0,35W 100 OHM+-1%TK50 METALFILM-RESISTOR	RL 082.6543	DRALORIC	SMA0207/100/HM-F-D	
R64	RL 0,35W 100 OHM+-1%TK50 METALFILM-RESISTOR	RL 082.6543	DRALORIC	SMA0207/100/HM-F-D	
R65	RL 0,35W 100 OHM+-1%TK50 METALFILM-RESISTOR	RL 082.6543	DRALORIC	SMA0207/100/HM-F-D	
R66	RL 0,35W 100 OHM+-1%TK50 METALFILM-RESISTOR	RL 082.6543	DRALORIC	SMA0207/100/HM-F-D	
R67	RL 0,35W 100 OHM+-1%TK50 METALFILM-RESISTOR	RL 082.6543	DRALORIC	SMA0207/100/HM-F-D	
R68	RL 0,35W 100 OHM+-1%TK50 METALFILM-RESISTOR	RL 082.6543	DRALORIC	SMA0207/100/HM-F-D	
R69	RL 0,35W 100 OHM+-1%TK50 METALFILM-RESISTOR	RL 082.6543	DRALORIC	SMA0207/100/HM-F-D	
R70	RL 0,35W 100 OHM+-1%TK50 METALFILM-RESISTOR	RL 082.6543	DRALORIC	SMA0207/100/HM-F-D	
R71	RL 0,35W 100 OHM+-1%TK50 METALFILM-RESISTOR	RL 082.6543	DRALORIC	SMA0207/100/HM-F-D	
R72	RL 0,35W 100 OHM+-1%TK50 METALFILM-RESISTOR	RL 082.6543	DRALORIC	SMA0207/100/HM-F-D	
R73	RL 0,35W 100 OHM+-1%TK50 METALFILM-RESISTOR	RL 082.6543	DRALORIC	SMA0207/100/HM-F-D	
R74	RL 0,35W 100 OHM+-1%TK50 METALFILM-RESISTOR	RL 082.6543	DRALORIC	SMA0207/100/HM-F-D	
R75	RL 0,35W 100 OHM+-1%TK50 METALFILM-RESISTOR	RL 082.6543	DRALORIC	SMA0207/100/HM-F-D	
R76	RL 0,35W 100 OHM+-1%TK50 METALFILM-RESISTOR	RL 082.6543	DRALORIC	SMA0207/100/HM-F-D	
R77	RL 0,35W 100 OHM+-1%TK50 METALFILM-RESISTOR	RL 082.6543	DRALORIC	SMA0207/100/HM-F-D	
R78	RL 0,35W 100 OHM+-1%TK50 METALFILM-RESISTOR	RL 082.6543	DRALORIC	SMA0207/100/HM-F-D	
R79	RL 0,35W 100 OHM+-1%TK50 METALFILM-RESISTOR	RL 082.6543	DRALORIC	SMA0207/100/HM-F-D	
R80	RL 0,35W 100 OHM+-1%TK50 METALFILM-RESISTOR	RL 082.6543	DRALORIC	SMA0207/100/HM-F-D	
R81	RL 0,35W 1,0 OHM+-1%TK50 METALFILMRESISTOR	RL 099.7860	RESISTA	MK2 1,00 OHM 1% TK50	
R82	RL 0,35W 1,50KOHM+-1%TK50 RESISTOR	RL 083.0732	DRALORIC	SMA0207/1,50K-F-D	
R83	RL 0,35W 2,21KOHM+-1%TK50 RESISTOR	RL 082.2477	DRALORIC	SMA 0207/2,21K-F-C	
R84	RL 0,35W 100 OHM+-1%TK50 METALFILM-RESISTOR	RL 082.6543	DRALORIC	SMA0207/100/HM-F-D	
R85	RL 0,35W 100 OHM+-1%TK50 METALFILM-RESISTOR	RL 082.6543	DRALORIC	SMA0207/100/HM-F-D	
R86	RL 0,35W 100 OHM+-1%TK50 METALFILM-RESISTOR	RL 082.6543	DRALORIC	SMA0207/100/HM-F-D	
R87	RL 0,35W 100 OHM+-1%TK50 METALFILM-RESISTOR	RL 082.6543	DRALORIC	SMA0207/100/HM-F-D	

Für diese Unterlage behalten wir uns alle Rechte vor

Kennz. Comp.No.	Benennung Designation	Sachnummer Stock No.	Hersteller Manufacturer	Bezeichnung Designation	enthalten in contained in
R88	RL 0,35W 100 OHM+-1%TK50 METALFILM-RESISTOR	RL 082.6543	DRALORIC	SMA0207/100/HM-F-D	
R89	RG 215 OHM+-2%TK200 1206 CHIP RESISTOR	006.8961	DRALORIC	CGB3216 215OHM2% TK	
R90	RL 0,35W 475 OHM+-1%TK50 RESISTOR	RL 083.0390	DRALORIC	SMA0207/475OHM-F-D	
R91	RL 0,35W 221 OHM+-1%TK50 RESISTOR	RL 083.0084	DRALORIC	SMA0207/221OHM-F-D	
R92	RL 0,35W 2,74 OHM+-1%TK50 METALFILMRESISTOR	RL 099.8973	RESISTA	MK2 2,74 OHM+-1%TK50	
R93	RL 0,35W101 OHM+-0,1%TK25 RESISTOR	RL 083.7237	DRALORIC	SMA0207/101OHM-B-E	
R94	RL 0,35W101 OHM+-0,1%TK25 RESISTOR	RL 083.7237	DRALORIC	SMA0207/101OHM-B-E	
R95	RL 0,35W104 OHM+-0,1%TK25 RESISTOR	RL 083.7250	DRALORIC	SMA0207	
R96	RL 0,35W100KOHM+-0,1%TK25 RESISTOR	RL 084.4983	DRALORIC	SMA0207/100K-B-E	
R97	RL 0,35W10,0KOHM+-0,1%T25 RESISTOR	RL 084.3064	DRALORIC	SMA0207/10K-B-E	
R98	RL 0,35W909 OHM+-0,1%TK25 RESISTOR	RL 083.9069	DRALORIC	SMA/207/909OHM-B-E	
R99	RL 0,35W 2,74 OHM+-1%TK50 METALFILMRESISTOR	RL 099.8973	RESISTA	MK2 2,74 OHM+-1%TK50	
R100	RL 0,35W 2,21KOHM+-1%TK50 RESISTOR	RL 082.2477	DRALORIC	SMA 0207/2,21K-F-C	
R101	RL 0,35W 1,50KOHM+-1%TK50 RESISTOR	RL 083.0732	DRALORIC	SMA0207/1,50K-F-D	
R102	RL 0,35W 1KOHM+-1%TK50 RESISTOR	RL 082.2160	DRALORIC	SMA0207/1K-F-C	
R103	RL 0,35W 475 OHM+-1%TK50 RESISTOR	RL 083.0390	DRALORIC	SMA0207/475OHM-F-D	
R104	RL 0,35W 475 OHM+-1%TK50 RESISTOR	RL 083.0390	DRALORIC	SMA0207/475OHM-F-D	
R105	RL 0,35W 475 OHM+-1%TK50 RESISTOR	RL 083.0390	DRALORIC	SMA0207/475OHM-F-D	
R106	RL 0,35W 150 OHM+-1%TK50 RESISTOR	RL 082.9942	DRALORIC	SMA0207/150OHM-F-D	
R107	RL 0,35W15,0KOHM+-0,1%T25 RESISTOR	RL 084.3406	DRALORIC	SMA0207/15,0K-B-E	
R108	RL 0,35W5,62KOHM+-0,1%T25 RESISTOR	RL 084.2580	DRALORIC	SMA0207/5,62K-B-E	
R109	RL 0,35W10,0KOHM+-0,1%T25 RESISTOR	RL 084.3064	DRALORIC	SMA0207/10K-B-E	
R110	RL 0,35W10,0KOHM+-0,1%T25 RESISTOR	RL 084.3064	DRALORIC	SMA0207/10K-B-E	
R111	RL 0,35W10,0KOHM+-0,1%T25 RESISTOR	RL 084.3064	DRALORIC	SMA0207/10K-B-E	
R112	RL 0,35W10,0KOHM+-0,1%T25 RESISTOR	RL 084.3064	DRALORIC	SMA0207/10K-B-E	
R113	RL 0,35W10,0KOHM+-0,1%T25 RESISTOR	RL 084.3064	DRALORIC	SMA0207/10K-B-E	
R114	RL 0,35W 27,4KOHM+-1%TK50 RESISTOR	RL 082.2583	DRALORIC	SMA 0207/27,4K-F-C	
R115	RL 0,35W 10,0KOHM+-1%TK50 RESISTOR	RL 083.1297	DRALORIC	SMA0207/10K-F-D	
R116	RL 0,35W109 OHM+-0,1%TK25 RESISTOR	RL 083.7295	DRALORIC	SMA0207/109OHM-B-E	
R117	RL 0,35W 1 KOHM+-0,1%TK25 RESISTOR	083.9146	DRALORIC	SMA0207/1K-B-E	
R118	RS 0,75W 100HM+-10%CERMET DEPOS.-CARBON POTENTIOMET	RS 037.7309	BOURNS	3006P-1-10 OHM +-10%	
R119	RL 0,35W 4,75KOHM+-1%TK50 RESISTOR	RL 083.1097	DRALORIC	SMA0207/4,75K-F-D	
R120	RL 0,35W2,91KOHM+-0,1%T25 RESISTOR	RL 084.2039	DRALORIC	SMA0207/2,91K-B-D	
R121	RL 0,35W 1 KOHM+-0,1%TK25 RESISTOR	083.9146	DRALORIC	SMA0207/1K-B-E	
R122	RL 0,35W 1 KOHM+-0,1%TK25 RESISTOR	083.9146	DRALORIC	SMA0207/1K-B-E	
R123	RS 0,3W 10KOHM+-10%CERMET TRIMMING POTENTIOMETER	RS 006.9145	BECKMAN	67W 10KOHM 10%	
R124	RL 0,35W 2,21KOHM+-1%TK50 RESISTOR	RL 082.2477	DRALORIC	SMA 0207/2,21K-F-C	
R125	RL 0-OHM-WIDERST. 0204 0-OHM RESISTOR	RL 069.0000	DRALORIC	OMA 0204	
R126	RL 0,35W 1KOHM+-1%TK50 RESISTOR	RL 082.2160	DRALORIC	SMA0207/1K-F-C	

Kennz. Comp.No.	Benennung Designation	Sachnummer Stock No.	Hersteller Manufacturer	Bezeichnung Designation	enthalten in contained in
R127	RL 0,35W 10,0 OHM+-1%TK50 RESISTOR	RL 082.8852	DRALORIC	SMA0207/100HM-F-D	
R128	RL 0,35W 100 OHM+-1%TK50 METALFILM-RESISTOR	RL 082.6543	DRALORIC	SMA0207/100/HM-F-D	
R129	RL 0,35W 2,21KOHM+-1%TK50 RESISTOR	RL 082.2477	DRALORIC	SMA 0207/2,21K-F-C	
R130	RL 0,35W 1KOHM+-1%TK50 RESISTOR	RL 082.2160	DRALORIC	SMA0207/1K-F-C	
R131	RL 0,35W 5,62KOHM+-1%TK50 RESISTOR	RL 082.2190	DRALORIC	SMA0207/5,62K-F-C	
R132	RL 0,35W 13,0KOHM+-1%TK50 RESISTOR	RL 083.1368	DRALORIC	SMA0207/13,0K-F-D	
R133	RL 0,35W 100KOHM+-1%TK50 RESISTOR	RL 082.1764	DRALORIC	SMA0207/100K-F-C	
R134	RL 0,35W 1KOHM+-1%TK50 RESISTOR	RL 082.2160	DRALORIC	SMA0207/1K-F-C	
R135	RL 0,35W 475 OHM+-1%TK50 RESISTOR	RL 083.0390	DRALORIC	SMA0207/4750HM-F-D	
R136	RL 0,35W 10,0KOHM+-1%TK50 RESISTOR	RL 083.1297	DRALORIC	SMA0207/10K-F-D	
R137	RL 0,35W 1KOHM+-1%TK50 RESISTOR	RL 082.2160	DRALORIC	SMA0207/1K-F-C	
R138	RL 0,35W 475 OHM+-1%TK50 RESISTOR	RL 083.0390	DRALORIC	SMA0207/4750HM-F-D	
R139	RL 0,35W 10,0KOHM+-1%TK50 RESISTOR	RL 083.1297	DRALORIC	SMA0207/10K-F-D	
R140	RL 0,35W 1KOHM+-1%TK50 RESISTOR	RL 082.2160	DRALORIC	SMA0207/1K-F-C	
R141	RL 0,35W 27,4KOHM+-1%TK50 RESISTOR	RL 082.2583	DRALORIC	SMA 0207/27,4K-F-C	
R142	RL 0,35W 1KOHM+-1%TK50 RESISTOR	RL 082.2160	DRALORIC	SMA0207/1K-F-C	
R143	RG 215 OHM+-2%TK200 1206 CHIP RESISTOR	006.8961	DRALORIC	CGB3216 215OHM2% TK	
R145	RS 0,3W 20KOHM+-10%CERMET TRIMMING POTENTIOMETER	RS 006.9151	BECKMAN	67W 20KOHM 10%	
R146 ..149	RG 147 OHM+-2%TK200 1206 CHIP RESISTOR	006.8926	DRALORIC	CGB3216 147OHM2% TK	
R150	RL 0,35W 1 KOHM+-0,1%TK25 RESISTOR	083.9146	DRALORIC	SMA0207/1K-B-E	
R151	RL 0,35W 10,0 OHM+-1%TK50 RESISTOR	RL 082.8852	DRALORIC	SMA0207/100HM-F-D	
R152	RL 0,35W 22,1KOHM+-1%TK50 RESISTOR	RL 083.1545	DRALORIC	SMA/207/22,1K-F-C	
R153	RL 0,35W 100 OHM+-1%TK50 METALFILM-RESISTOR	RL 082.6543	DRALORIC	SMA0207/100/HM-F-D	
R154	RL 0,35W 100 OHM+-1%TK50 METALFILM-RESISTOR	RL 082.6543	DRALORIC	SMA0207/100/HM-F-D	
R155	RG 10 KOHM+-1%TK100 1206 CHIP RESISTOR	RG 007.0793	DALE	CRCW1206-10 10K F-T	
R156	RG 3,92KOHM+-1%TK100 1206 RESISTOR CHIP	RG 007.5808	DALE	CRCW1206-10 3K92 F-T	
R160	RL 0,21W 4,75KOHM+-1%TK50 RESISTOR	RL 092.1521	RESISTA	MK1 4K75 1% TK50	
R161	RL 0,21W 4,75KOHM+-1%TK50 RESISTOR	RL 092.1521	RESISTA	MK1 4K75 1% TK50	
R162	RL 0,21W 1,82KOHM+-1%TK50 RESISTOR	RL 092.1473	RESISTA	MK1 1K82 1% TK50	
R163	RL 0,21W 2,74KOHM+-1%TK50 RESISTOR	RL 092.1496	RESISTA	MK1 2K74 1% TK50	
R164	RL 0,21W 1,50KOHM+-1%TK50 RESISTOR	RL 092.1467	RESISTA	MK1 1K5 1% TK50	
R165	RL 0,35W 681 OHM+-1%TK50 RESISTOR	RL 083.0490	DRALORIC	SMA0207/6810HM-F-D	
R166	RL 0,35W 332 OHM+-1%TK50 RESISTOR	RL 083.0255	DRALORIC	SMA0207/3320HM-F-D	
R167	RL 0,21W 2,21KOHM+-1%TK50 RESISTOR	RL 092.1480	RESISTA	MK1 2K21 1% TK50	
R168	RL 0,21W 47,5 OHM+-1%TK50 RESISTOR	RL 092.1267	RESISTA	MK1 47,5OHM 1% TK50	
R169	RL 0,21W 2,21KOHM+-1%TK50 RESISTOR	RL 092.1480	RESISTA	MK1 2K21 1% TK50	
R170	RL 0,21W 681 OHM+-1%TK50 RESISTOR	RL 092.1421	RESISTA	MK1 681OHM 1% TK50	
R171	RL 0,35W 475 OHM+-1%TK50 RESISTOR	RL 083.0390	DRALORIC	SMA0207/4750HM-F-D	
R172	RL 0,35W 475 OHM+-1%TK50 RESISTOR	RL 083.0390	DRALORIC	SMA0207/4750HM-F-D	

Für diese Unterlage behalten wir alle Rechte vor

Kennz. Comp.No.	Benennung Designation	Sachnummer Stock No.	Hersteller Manufacturer	Bezeichnung Designation	enthalten in contained in
R173	RL 0,35W27,40 OHM+-1%TK50 RESISTOR	RL 082.9271	DRALORIC	SMA0207/27,40HM-F-D	
R177	RL 0,35W 1KOHM+-1%TK50 RESISTOR	RL 082.2160	DRALORIC	SMA0207/1K-F-C	
R178	RG 4,64KOHM+-2%TK200 1206 CHIP RESISTOR	007.0712	DRALORIC	CGB 3216 4,64KOHM 2%	
R179	RG 4,64KOHM+-2%TK200 1206 CHIP RESISTOR	007.0712	DRALORIC	CGB 3216 4,64KOHM 2%	
R180	RL 0,35W 221 OHM+-1%TK50 RESISTOR	RL 083.0084	DRALORIC	SMA0207/2210HM-F-D	
R181	RL 0,35W 100 OHM+-1%TK50 METALFILM-RESISTOR	RL 082.6543	DRALORIC	SMA0207/100/HM-F-D	
R182	RL 0,35W 4,75KOHM+-1%TK50 RESISTOR	RL 083.1097	DRALORIC	SMA0207/4,75K-F-D	
R184	RG 47,5 OHM+-1%TK100 1206 RESISTOR CHIP	RG 007.5566	DALE	CRCW1206-10 47R5 F-T	
R185	RL 0,35W 100 OHM+-1%TK50 METALFILM-RESISTOR	RL 082.6543	DRALORIC	SMA0207/100/HM-F-D	
R186	RL 0,35W 562 OHM+-1%TK50 RESISTOR	RL 083.0461	DRALORIC	SMA0207/5620HM-F-D	
R187	RL 0,35W 562 OHM+-1%TK50 RESISTOR	RL 083.0461	DRALORIC	SMA0207/5620HM-F-D	
R188	RL 0,35W 182 OHM+-1%TK50 RESISTOR	RL 083.0010	DRALORIC	SMA0207/1820HM-F-D	
R189	RL 0,35W 1,21KOHM+-1%TK50 RESISTOR	RL 083.0655	DRALORIC	SMA0207/1,21K-F-D	
R190	RL 0,35W 562 OHM+-1%TK50 RESISTOR	RL 083.0461	DRALORIC	SMA0207/5620HM-F-D	
R191	RL 0,35W15 OHM 1%TK50 RESISTOR	RL 082.9020	DRALORIC	SMA0207/150HM-F-D	
R192	RL 0,35W 475 OHM+-1%TK50 RESISTOR	RL 083.0390	DRALORIC	SMA0207/4750HM-F-D	
R193	RL 0,35W 18,2KOHM+-1%TK50 RESISTOR	RL 083.1480	DRALORIC	SMA/207/18,2K-F-C	
R194	RL 0,35W 2,21KOHM+-1%TK50 RESISTOR	RL 082.2477	DRALORIC	SMA 0207/2,21K-F-C	
R195	RL 0,35W 2,74 OHM+-1%TK50 METALFILMRESISTOR	RL 099.8973	RESISTA	MK2 2,74 OHM+-1%TK50	
R196	RL 0,35W 221 OHM+-1%TK50 RESISTOR	RL 083.0084	DRALORIC	SMA0207/2210HM-F-D	
R197	RL 0,35W 100 OHM+-1%TK50 METALFILM-RESISTOR	RL 082.6543	DRALORIC	SMA0207/100/HM-F-D	
R200	RL 0,35W22,10 OHM+-1%TK50 RESISTOR	RL 082.9188	DRALORIC	SMA0207/22,10HM-F-D	
R201	RL 0,35W 221 OHM+-1%TK50 RESISTOR	RL 083.0084	DRALORIC	SMA0207/2210HM-F-D	
R202	RL 0,35W 68,1 OHM+-1%TK50 RESISTOR	RL 082.9636	DRALORIC	SMA0207/68,10HM-F-D	
R203	RL 0,35W 68,1 OHM+-1%TK50 RESISTOR	RL 082.9636	DRALORIC	SMA0207/68,10HM-F-D	
R204	RL 0,35W 68,1 OHM+-1%TK50 RESISTOR	RL 082.9636	DRALORIC	SMA0207/68,10HM-F-D	
R205	RL 0,35W 56,2 OHM+-1%TK50 RESISTOR	RL 082.9571	DRALORIC	SMA0207/56,20HM-F-D	
R210	RL 0,35W 3,92KOHM+-1%TK50 RESISTOR	RL 083.1039	RESISTA	MK2	
R211	RL 0,35W 15,0KOHM+-1%TK50 RESISTOR	RL 083.1400	DRALORIC	SMA0207/15K-F-D	
R212	RL 0,35W 221 OHM+-1%TK50 RESISTOR	RL 083.0084	DRALORIC	SMA0207/2210HM-F-D	
R213	RL 0,35W 10,0KOHM+-1%TK50 RESISTOR	RL 083.1297	DRALORIC	SMA0207/10K-F-D	
R214	RL 0,35W 1,50KOHM+-1%TK50 RESISTOR	RL 083.0732	DRALORIC	SMA0207/1,50K-F-D	
R215	RL 0,35W18,20 OHM+-1%TK50 RESISTOR	RL 082.9107	DRALORIC	SMA0207/18,20HM-F-D	
R216	RL 0,35W18,20 OHM+-1%TK50 RESISTOR	RL 082.9107	DRALORIC	SMA0207/18,20HM-F-D	
R218	RL 0,35W 1 KOHM+-0,1%TK25 RESISTOR	083.9146	DRALORIC	SMA0207/1K-B-E	
R219	RL 0,21W 27,4 OHM+-1%TK50 RESISTOR	RL 092.1238	RESISTA	MK1 27,40HM 1% TK50	
R220	RL 0,35W 10,0 OHM+-1%TK50 RESISTOR	RL 082.8852	DRALORIC	SMA0207/100HM-F-D	
R221	RL 0,35W 182 OHM+-1%TK50 RESISTOR	RL 083.0010	DRALORIC	SMA0207/1820HM-F-D	
R222	RL 0,35W 1,21KOHM+-1%TK50 RESISTOR	RL 083.0655	DRALORIC	SMA0207/1,21K-F-D	

Kennz. Comp.No.	Benennung Designation	Sachnummer Stock No.	Hersteller Manufacturer	Bezeichnung Designation	enthalten in contained in
R223	RL 0,35W 1 KOHM+-0,1%TK25 RESISTOR	083.9146	DRALORIC	SMA0207/1K-B-E	
R224	RL 0,35W15 OHM 1%TK50 RESISTOR	RL 082.9020	DRALORIC	SMA0207/150HM-F-D	
R225	RG 14,7 OHM+-2%TK200 1206 CHIP RESISTOR	006.8684	DRALORIC	CGB3216 14,70HM2% TK	
R229	RG 14,7 OHM+-2%TK200 1206 CHIP RESISTOR	006.8684	DRALORIC	CGB3216 14,70HM2% TK	
R230	RL 0,21W 18,2 OHM+-1%TK50 RESISTOR	RL 092.1215	RESISTA	MK1	
R231	RL 0,21W 68,1 OHM+-1%TK50 RESISTOR	RL 092.1309	RESISTA	MK1 68.10HM 1% TK50	
R232	RL 0,21W 1,50KOHM+-1%TK50 RESISTOR	RL 092.1467	RESISTA	MK1 1K5 1% TK50	
R233	RL 0,21W 1,00KOHM+-1%TK50 RESISTOR	RL 092.1444	RESISTA	MK1 1K00 1% TK50	
R234	RL 0,21W 10,0KOHM+-1%TK50 RESISTOR	RL 092.1567	RESISTA	MK1 10K0 1% TK50	
R235	RL 0,21W 27,4 OHM+-1%TK50 RESISTOR	RL 092.1238	RESISTA	MK1 27.40HM 1% TK50	
R236	RL 0,21W 10,0 OHM+-1%TK50 RESISTOR	RL 092.1715	RESISTA	MK1 10.00HM 1% TK50	
R237	RL 0,21W 182 OHM+-1%TK50 RESISTOR	RL 092.1350	RESISTA	MK1 1820HM 1% TK50	
R238	RL 0,21W 1,21KOHM+-1%TK50 RESISTOR	RL 092.1450	RESISTA	MK1 1K21 1% TK50	
R239	RL 0,21W 1,00KOHM+-1%TK50 RESISTOR	RL 092.1444	RESISTA	MK1 1K00 1% TK50	
R240	RL 0,21W 15,0 OHM+-1%TK50 RESISTOR	RL 092.1209	RESISTA	MK1 15.00HM 1% TK50	
R241	RL 0,21W 221 OHM+-1%TK50 RESISTOR	RL 092.1367	RESISTA	MK1 2210HM 1% TK50	
R242	RL 0,21W 392 OHM+-1%TK50 RESISTOR	RL 092.1396	RESISTA	MK1 3920HM 1% TK50	
R243	RL 0,21W 27,4KOHM+-1%TK50 RESISTOR	RL 092.1615	RESISTA	MK1 27K4 1% TK50	
R250	RL 0,35W 100 OHM+-1%TK50 METALFILM-RESISTOR	RL 082.6543	DRALORIC	SMA0207/100/HM-F-D	
V1	AK 2N2369A N 15V 200MA TRANSISTOR	AK 010.4680	VALVO	2N2369A	
V2	AK BC337-40 N 45V 800MA TRANSISTOR	303.9524	SIEMENS	BC337-40	
V50	AK BC337-40 N 45V 800MA TRANSISTOR	303.9524	SIEMENS	BC337-40	
V51	AK BC337-40 N 45V 800MA TRANSISTOR	303.9524	SIEMENS	BC337-40	
V90	AK BC337-40 N 45V 800MA TRANSISTOR	303.9524	SIEMENS	BC337-40	
V91	AK BC337-40 N 45V 800MA TRANSISTOR	303.9524	SIEMENS	BC337-40	
V92	AK BFY90 N 15V 25MA TRANSISTOR	AK 010.4550	VALVO	BFY90	
V93	BO UA78M15H+15VOA5 VREGL VOLTAGE REGULATOR	240.7389	FAIRCHILD	UA78M15HM	
V94	AK BC327-40 P 45V 800MA TRANSISTOR	303.9518	INTERMETAL	BC327-40	
V95	AE 5082-2800 SCHOTTKY DIODE	AE 012.9066	HEWLETT-P.	5082-2800	
V96	AE 5082-2800 SCHOTTKY DIODE	AE 012.9066	HEWLETT-P.	5082-2800	
V97	AE 5082-2800 SCHOTTKY DIODE	AE 012.9066	HEWLETT-P.	5082-2800	
V98	AE 5082-2800 SCHOTTKY DIODE	AE 012.9066	HEWLETT-P.	5082-2800	
V99	AE 5082-2800 SCHOTTKY DIODE	AE 012.9066	HEWLETT-P.	5082-2800	
V100	AE 5082-2800 SCHOTTKY DIODE	AE 012.9066	HEWLETT-P.	5082-2800	
V101	AE 5082-2800 SCHOTTKY DIODE	AE 012.9066	HEWLETT-P.	5082-2800	
V102	AE 5082-2800 SCHOTTKY DIODE	AE 012.9066	HEWLETT-P.	5082-2800	
V103	AE 5082-2800 SCHOTTKY DIODE	AE 012.9066	HEWLETT-P.	5082-2800	
V104	AE 5082-2800 SCHOTTKY DIODE	AE 012.9066	HEWLETT-P.	5082-2800	

Für diese Unterlage behalten wir uns alle Rechte vor

Kennz. Comp.No.	Benennung Designation	Sachnummer Stock No.	Hersteller Manufacturer	Bezeichnung Designation	enthalten in contained in
V105	AD 1N4448 75V 0A15 UDI DIODE	AD 012.0700	TEXAS INST	1N4448 GEGURTET	
V106	AM BF245A N-D 30V JFET FET	AM 010.8527	VALVO	BF245A	
V130	AK BC337-40 N 45V 800MA TRANSISTOR	303.9524	SIEMENS	BC337-40	
V131	AE 5082-2800 SCHOTTKY DIODE	AE 012.9066	HEWLETT-P.	5082-2800	
V132	AE 5082-2800 SCHOTTKY DIODE	AE 012.9066	HEWLETT-P.	5082-2800	
V180	AM BF247C N-D 25V JFET FET	209.0211	VALVO SEMI	BF247C	
V181	AK BFY90 N 15V 25MA TRANSISTOR	AK 010.4550	VALVO	BFY90	
V182	AK BC337-40 N 45V 800MA TRANSISTOR	303.9524	SIEMENS	BC337-40	
V183	AE BB809 26/ 6PF CDI TUNING DIODE	AE 092.9616	VALVO	BB809	
V184	AE BB809 26/ 6PF CDI TUNING DIODE	AE 092.9616	VALVO	BB809	
V185 ..188	AE BB909B 25/ 3PF CDI TUNING DIODE	AE 092.9600	VALVO	BB909B	
V189	AE BB809 26/ 6PF CDI TUNING DIODE	AE 092.9616	VALVO	BB809	
V190	AE BB809 26/ 6PF CDI TUNING DIODE	AE 092.9616	VALVO	BB809	
V210	AK BC337-40 N 45V 800MA TRANSISTOR	303.9524	SIEMENS	BC337-40	
V211	AK BFY90 N 15V 25MA TRANSISTOR	AK 010.4550	VALVO	BFY90	
V212	AK BFY90 N 15V 25MA TRANSISTOR	AK 010.4550	VALVO	BFY90	
V230	AK BFY90 N 15V 25MA TRANSISTOR	AK 010.4550	VALVO	BFY90	
V231	AK BFY90 N 15V 25MA TRANSISTOR	AK 010.4550	VALVO	BFY90	
V232	AK BC337-40 N 45V 800MA TRANSISTOR	303.9524	SIEMENS	BC337-40	
V240	AK BC337-40 N 45V 800MA TRANSISTOR	303.9524	SIEMENS	BC337-40	
W1	DX HF-KABEL W1	807.5563			
W2	DX HF-KABEL W2	807.5570			
W3	DX HF-KABEL	807.5092			
W4	DX HF-KABEL W4	807.5586			
X1	FJ EINBAUWINKELST. SMC ANGLE CONNECTOR	FJ 249.9684	RADIALL	R 112 669	
X4	FJ EINBAUWINKELST. SMC ANGLE CONNECTOR	FJ 249.9684	RADIALL	R 112 669	
X8	FJ EINBAUWINKELST. SMC ANGLE CONNECTOR	FJ 249.9684	RADIALL	R 112 669	
X21	FP IND.STECKERLEISTE 64 P MALE MULTIPOINT CONNECTOR	FP 273.0490	PANDUIT	100-964-033/999	
X30	FP INDIREKT.STECKERL.36P. PIN CONNECTOR 2-POLIG	FP 242.3600	BINDER	742-5-11-0178-00-36	
X31	FP KURZSCHLUSSBUCHSE SHORTING PLUG	FP 491.7042	PK	452-70302	
X130	FP INDIREKT.STECKERL.36P. PIN CONNECTOR 3-POLIG	FP 242.3600	BINDER	742-5-11-0178-00-36	
X131	FP KURZSCHLUSSBUCHSE SHORTING PLUG	FP 491.7042	PK	452-70302	
X132	FP KURZSCHLUSSBUCHSE SHORTING PLUG	FP 491.7042	PK	452-70302	
X133	FP INDIREKT.STECKERL.36P. PIN CONNECTOR 3-POLIG	FP 242.3600	BINDER	742-5-11-0178-00-36	
X180	FP INDIREKT.STECKERL.36P. PIN CONNECTOR 3-POLIG	FP 242.3600	BINDER	742-5-11-0178-00-36	
X181	FP KURZSCHLUSSBUCHSE SHORTING PLUG	FP 491.7042	PK	452-70302	
					- ENDE -

D3
HC 390
D2
HC 390
D1
HC 390
R250
100
D9
HC 151
R9
LBSFR0
X21C15
B.3
D7
HC 377
D8
HC 377
D6A
HC 74
R6
1k
R30.1
R25
1k
R7
1k
R8
1k
R30.1
D6B
HC 74
D11
F 192
R41.1
R11
1k
D10
F 192
R41.1
R10
1k
D13
74 167
R15
475
R13
1k
R37.1
R14
475
D20A
LS 20
L31
1,2µ
+5,2V dig.
C31
100µ
R6.1
C1,C2,
C3,
C9
4x10n
C6
10n
C30
100n
R30
2,21
D1,D2
D3,D9
D6
C7,C8,
C17
C18
4x10n
C33
100n
R36
2,21
D7,D17
D8,D18
R13.1
C13,C14,
C15,
C16
4x10n
C34
100µ
R37
R38
1
D13,14
D15,16
R40.1
C12,C20
2x10n
C10,C11
2x10n
C35
100n
R41
2,21k
D12
D20
D10
D11
BRW
EN
STR
UNI CAS
CLR
S9
LD
CUP
CDN
CLR
A
B
C
D
PR
CL
D
Q
Z
Zeichn.-Nr. 807. E41 S Bl.1
Unterlage behalten
alle Rechte vor
PE 095 4115 0781

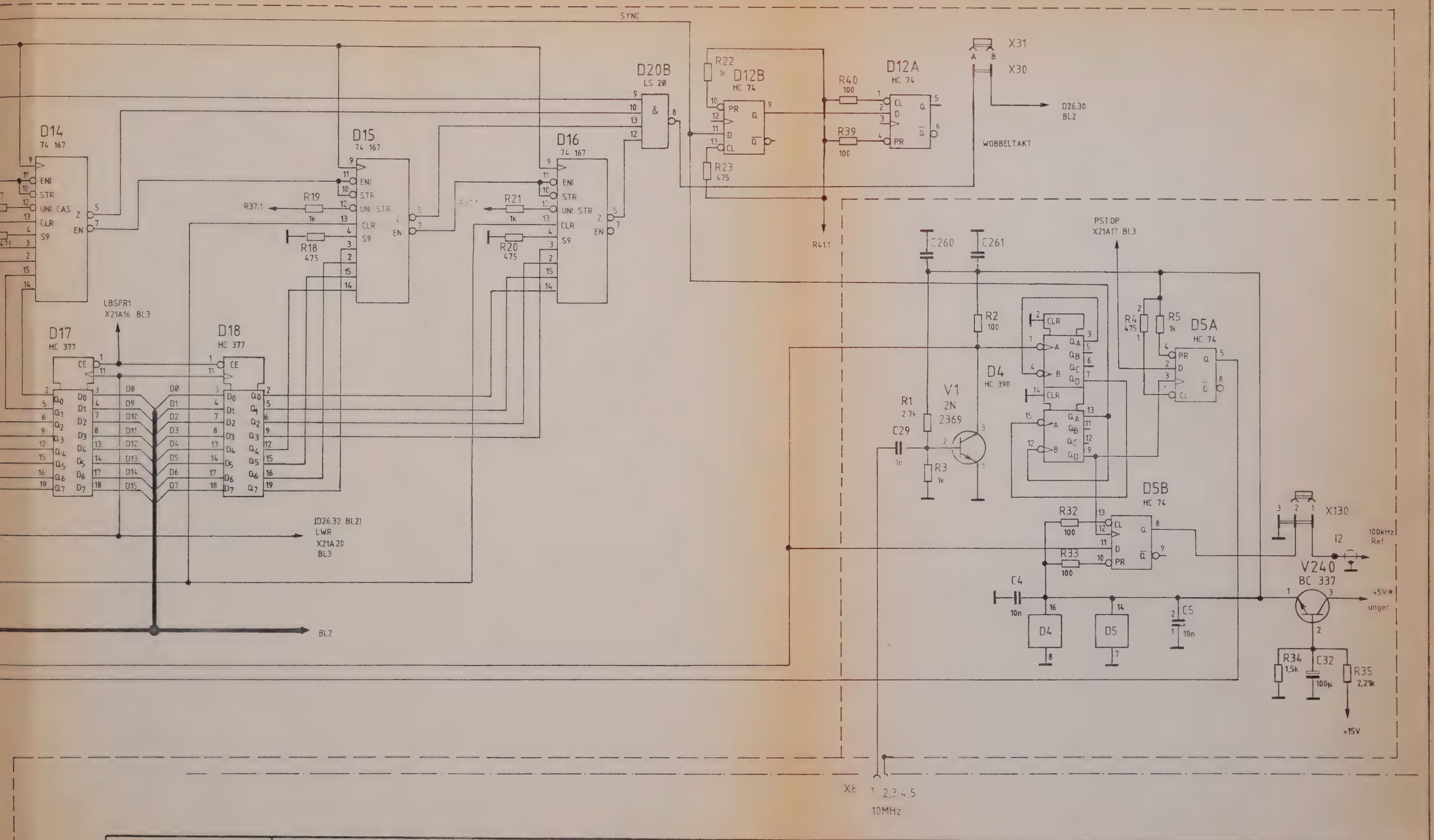

ROHDE & SCHWARZ	H	32 745 (101)	03.87	C	P	37 063 (37)	10.88	Gn	1KGF	Tag	Name
	K	32 766	12.87	GN					Bearb.	11.85	GN
	O	37 063 (26)	08.88	Gn	G	32 745 (91)	03.87	Gn	Gepr.		
	Änd.	Änderungs Mitteilung	Datum	Name	Änd.	Änderungs Mitteilung	Datum	Name	Norm		

Benennung: SWEEP-SYNTHESIZER

zu Gerät: FSA

Zeichn.-Nr.: 807. 5011 S

reg. V: 806 4011 V

erste Z.

Blatt Nr.: 1 / 3 B

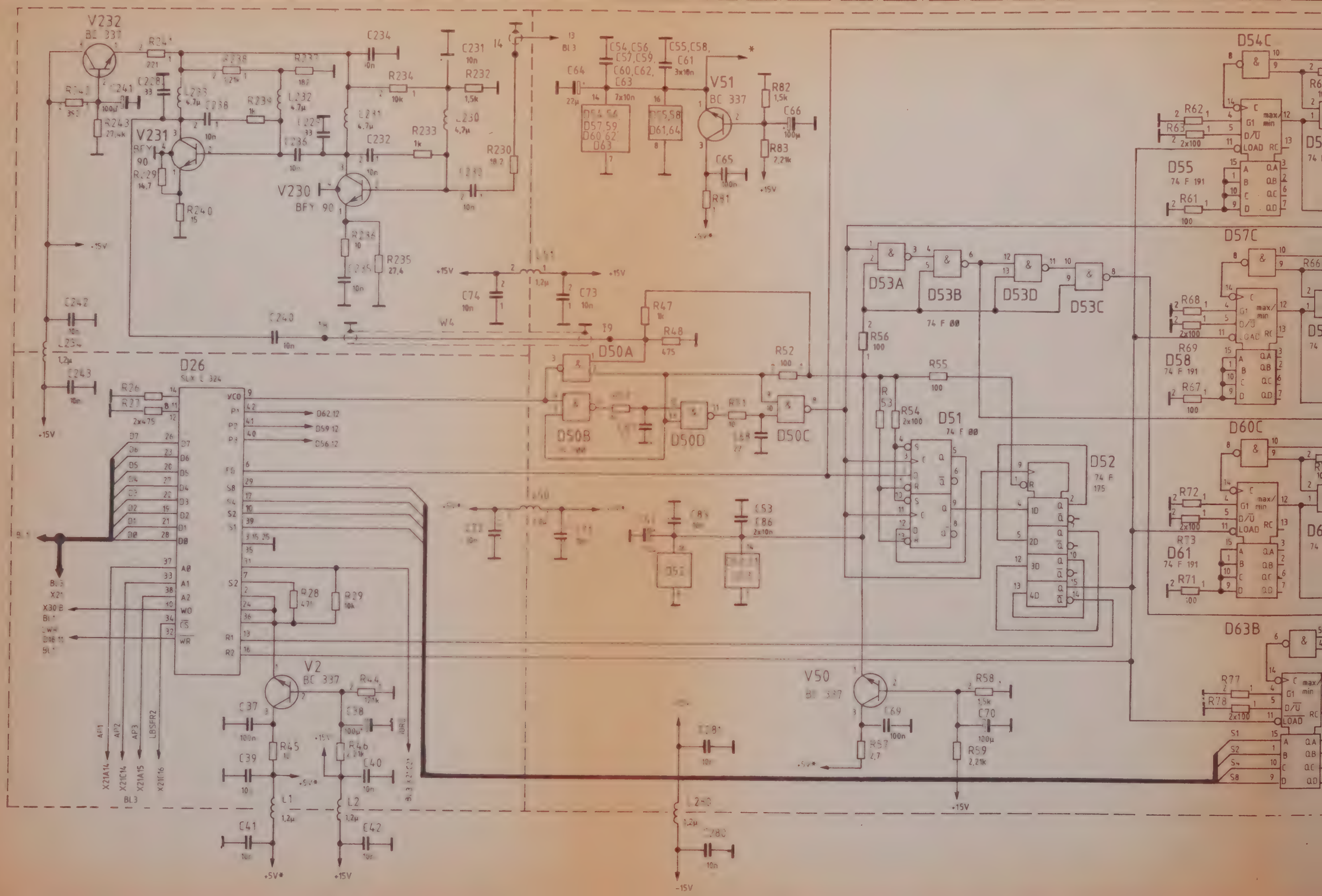
V232
BC 337
V231
BFY 90
V230
BFY 90
V51
BC 337
V2
BC 337
V50
BC 337
D26
SLX L 324
D50A
D50B
D50C
D50D
D51
74 F 00
D52
74 F 175
D53A
D53B
D53C
D53D
D54C
D55
74 F 191
D57C
D58
74 F 191
D60C
D61
74 F 191
D63B
+15V
-15V
+5V*
BL3
X21A14
X21C14
X21A15
X21C16
AP1
AP2
AP3
LBSFR2

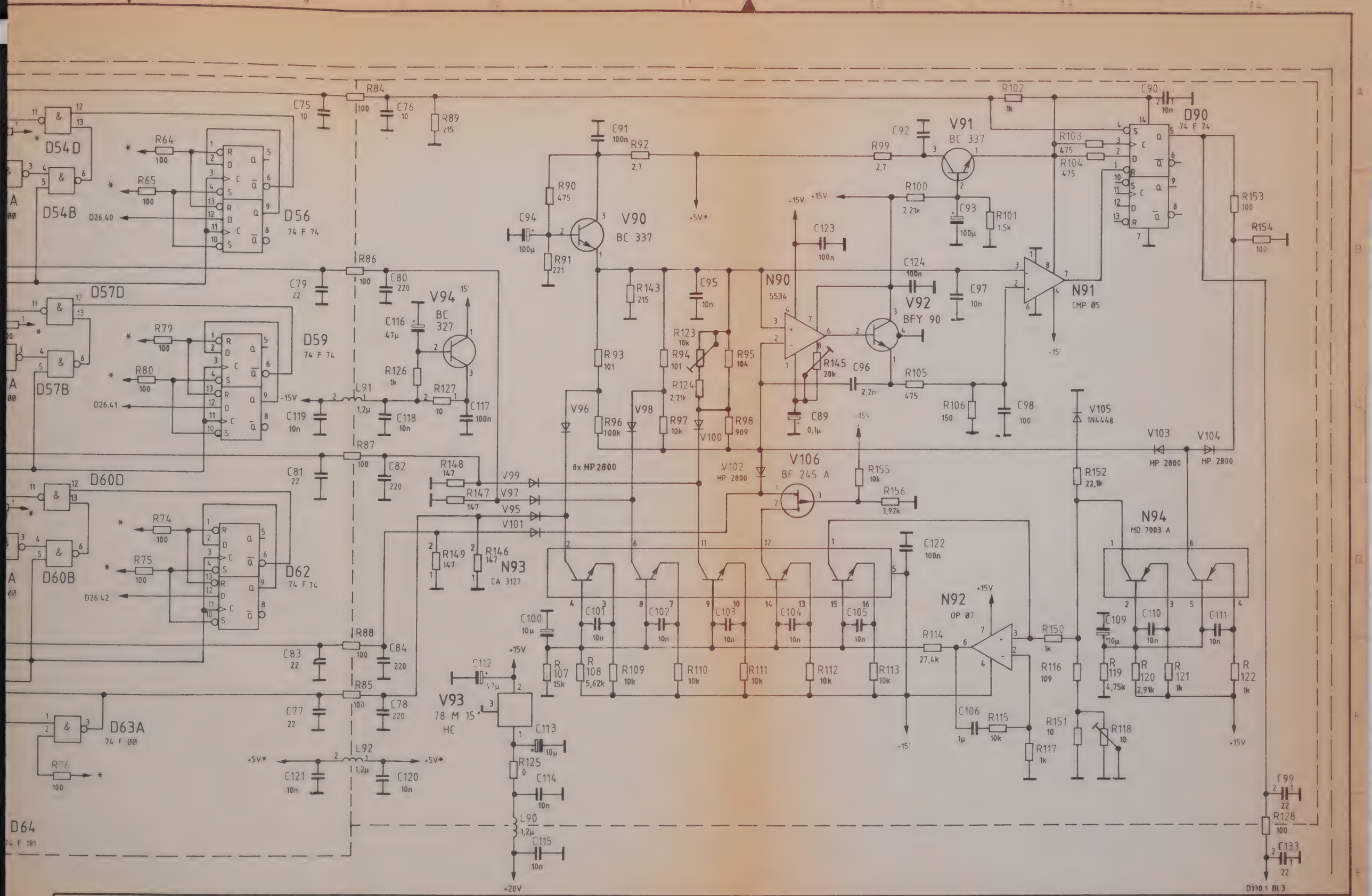

ROHDE & SCHWARZ	G	32 745 (91)	03.87	GN	M	37 063 (11)	03.88	GN	1KGF	Tag	Name	Benennung	SWEEP-SYNTHESIZER
	H	32 745 (101)	03.87	Gn	O	37 063 (26)	08.88	Gn	Bearb	12.85	GN		
	K	32 766	12.87	GN	Q	37 063	01.89	Gn	Gepr				
													FSA

Zeichn. Nr. 807. 5011 S

Blatt 2 / 3

Ref. 806 4011 V

Zeichn.-Nr. 807 [illegible] S Bl.3
Unterlage [illegible]
alle Rechte vor

V130 BC 337
C132 1n
R128.2 Bl.2
DS9 Bl.1
I1
R131 5,62k
R132 13k
C134 100µ
R133 100k
C136 1n
R129 2,21k
V131 2xHP2800
R130
V132
R134 1k
R135 475
C135 22n
R136 10k
C137
D130 MC 4044
N130 5534
R137 1k
R138 475
C138 22n
C139 1n
C139 0,22µ
C140 1n
R139 10k
R140 1k
R142 1k
C144 2,2n
C142 2,7n
L130 820µ
C143 22n
I7
I6
L90.2 +20V
L214.2
L134 1,2µ
+20V
C150 10n
R178 4,64k
R179 4,64k
X132
X133
C149
C188 390n
R177 1k
R182 4,75k
C181 22n
R180 221
L180 10µ
L190 1,2µ
R181 100
L182 10µ
L183 1,2µ
V183 BB 809
V184 BB 809
V185 BB 909
V186 BB 909
V187 BB 909
V188 BB 909
V189 BB 809
V190 BB 809 +20V
C180 10n
R185 100
R197 100
L184 10µ
L185 1,2µ
V180 BF 247 C
C186
C184
C185 0..10
L186
C187 15
C189 100n
L187 1,2µ
R186 562
C190 15
N180 MSA 0104
R184 50
C191 47
C193 10n
R188 182
R187 562
-15V
C182 10n
L181 1,2µ
C254 10n
L252 1,2µ
C183 10n
C255 10n
+20V
R160 4,75k
C160 100n
R161 4,75k
R162 1,82k
C161 100n
R163 4,74k
R164 1,5k
C162 100n
N160 TCA 965
R169 2,21k
R167 2,21k
R170 681
R171 475
D160 74 LS 74
R172 475
C163 100n
C164 100n
R168 47,5
R173 27,4
LEF
RES
+15V
+5V dig.
R165 681
R166 332
C250 10n
C252 10n
L250 1,2µ
L251 1,2µ
C251 10n
C253 10n
C256 10n
C258 10n
L253 1,2µ
C257 10n
C259 10n
+5V*
BL1
BL2
D26
X21
LIORD D26.31
PSTOP D5.2
LWR D8.11
LBSFR0 D6.1
LBSFR1 D17.1
LBSFR2
AP1
AP2
AP3
DP0
DP1
DP2
DP3
DP4
DP5
DP6
DP7
DP8
DP9
DP10
DP11
DP12
DP13
DP14
DP15
C 17 C 21 A 17 A 20 C 15 A 16 C 16 A 14 C 14 A 15 A 22 C 22 A 23 C 23 A 24 C 24 A 25 C 25 A 26 C 26 A 27 C 27 A 28 C 28 A 29 C 29
A13
C13
A21
C20
A,C31
A,C11
A,C9
A,C7
A,C3

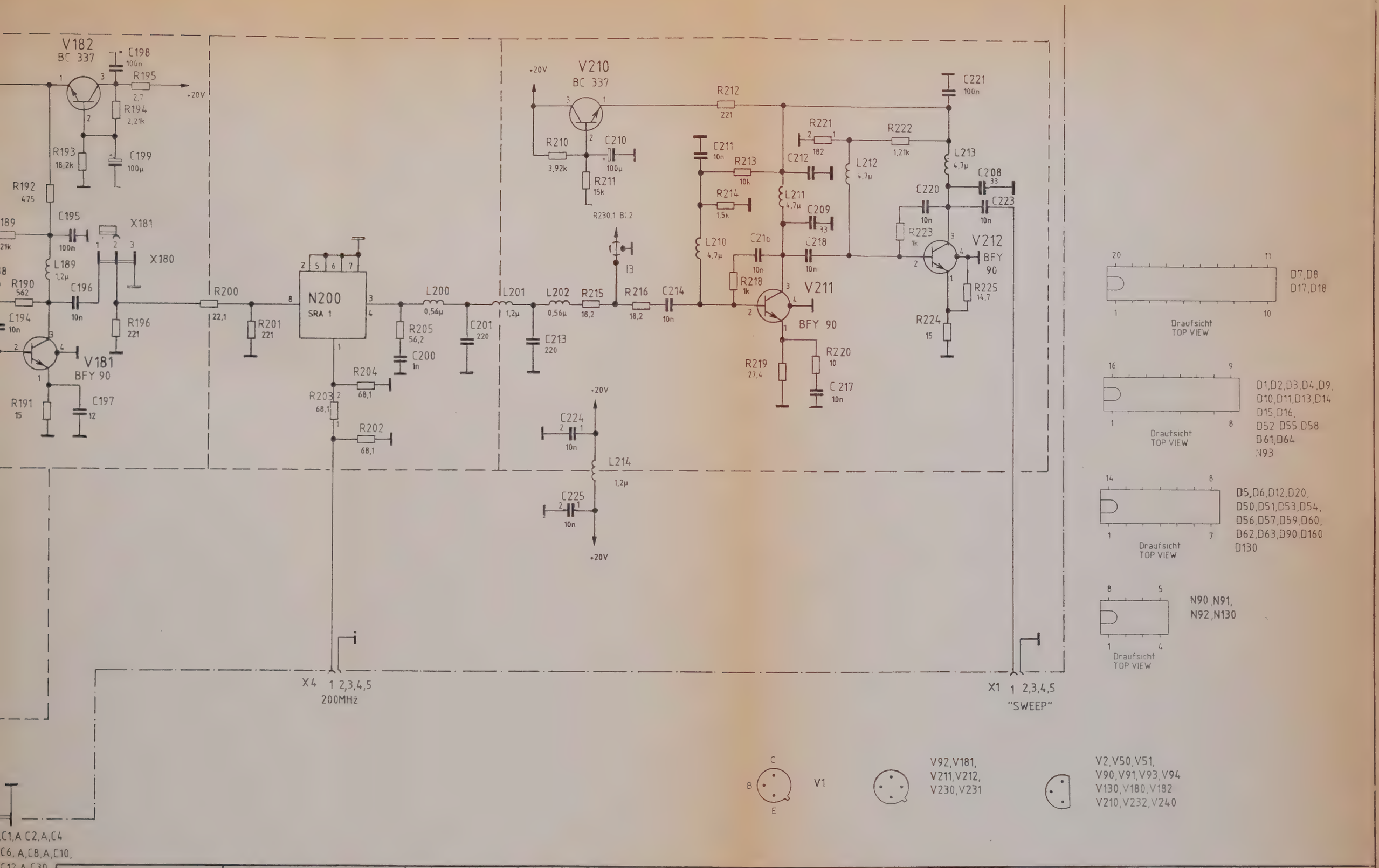

ROHDE & SCHWARZ	H	32 745 (101)	03.87	GN	L	37 063 (2)	01.88	Gn	1KGF	Tag	Name	Benennung	SWEEP-SYNTHESIZER
	I	32 745 (106)	04.87	GN	O	37 063 (26)	08.88	Gn	Bearb.	12.85	GN		
	K	32 766	12.87	GN					Gepr.			zu Gerät FSA	
						Änderungs Mitteilung	Datum	Name	Norm				

Zeichn.-Nr. 807. 5011 S

Blatt 3 / 3

Ersatz 806 4011 V

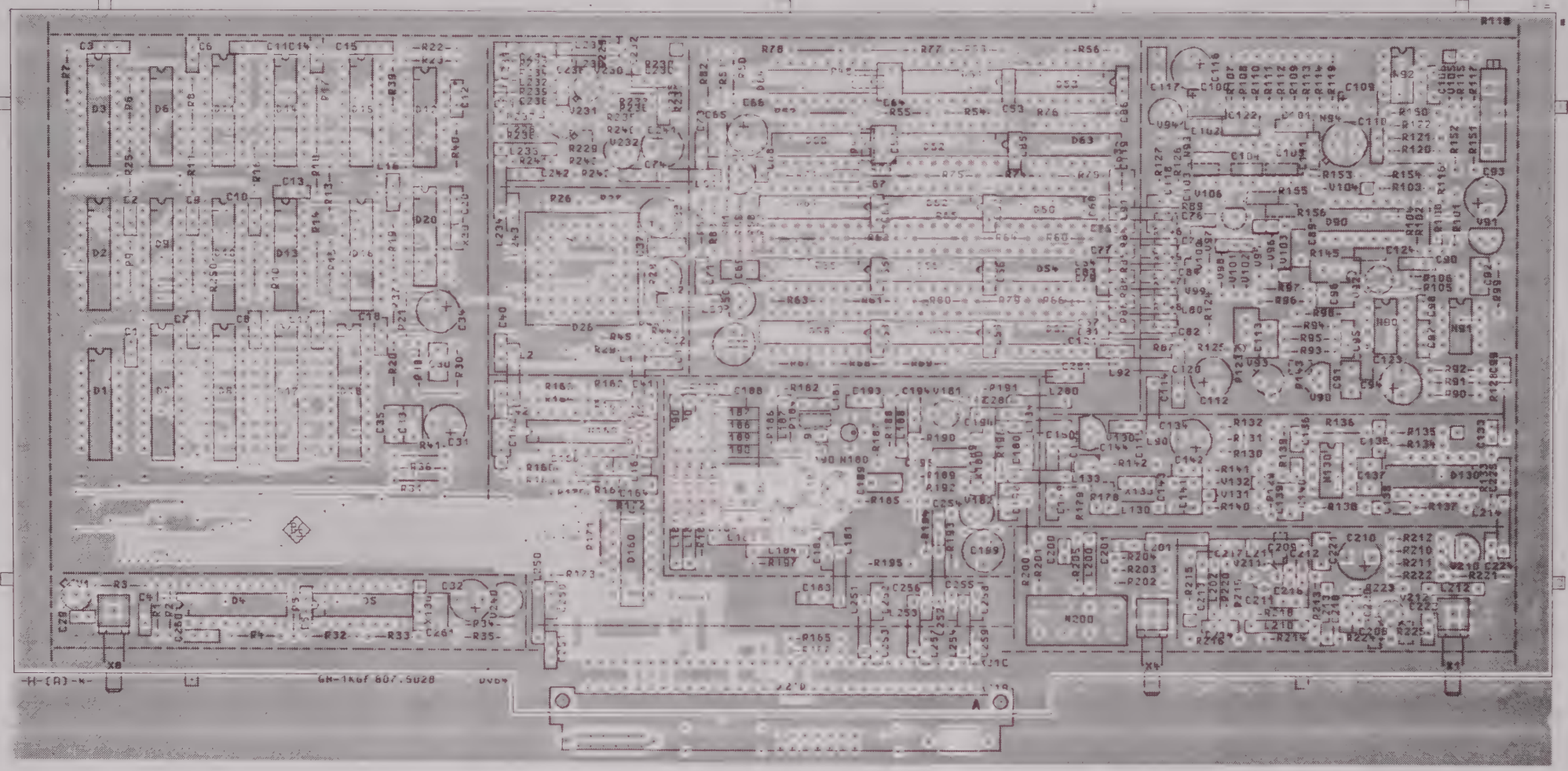

Ansicht und Leitungsführung Bauteilseite
View of tracks on component side

VARIANTENERKLÄRUNG/VERSION
VAR02 – GRUNDAUSFÜHRUNG/BASIC MODEL

0 37063 (26) 07.88 GN	Maße ohne Toleranzangabe	Maßstab 1 : 1	
		Halbzeug, Werkstoff	
	1KEF Tag Name	Benennung	
	Bearb 07.88 GN	SWEEP-SYNTHESIZER	Z
	Gepr		
	Norm		
	ROHDE&SCHWARZ	Zeichn.-Nr 807.5011.01 EE	Blatt-Nr 3
Änd. Zust. / Änderungs-Mitteilung / Tag / Name	zu Gerät FSA	reg. i. V. 806.4011V erste Z	

ACHTUNG EGB!
Elektrostatisch gefährdete Bauelemente erfordern eine besondere Handhabung
ATTENTION ESD!
Electrostatic sensitive devices require a special handling

Für Unterlage behalten alle Rechte vor

Darstellung Loetseite

Bearbeitet nach HVN 000

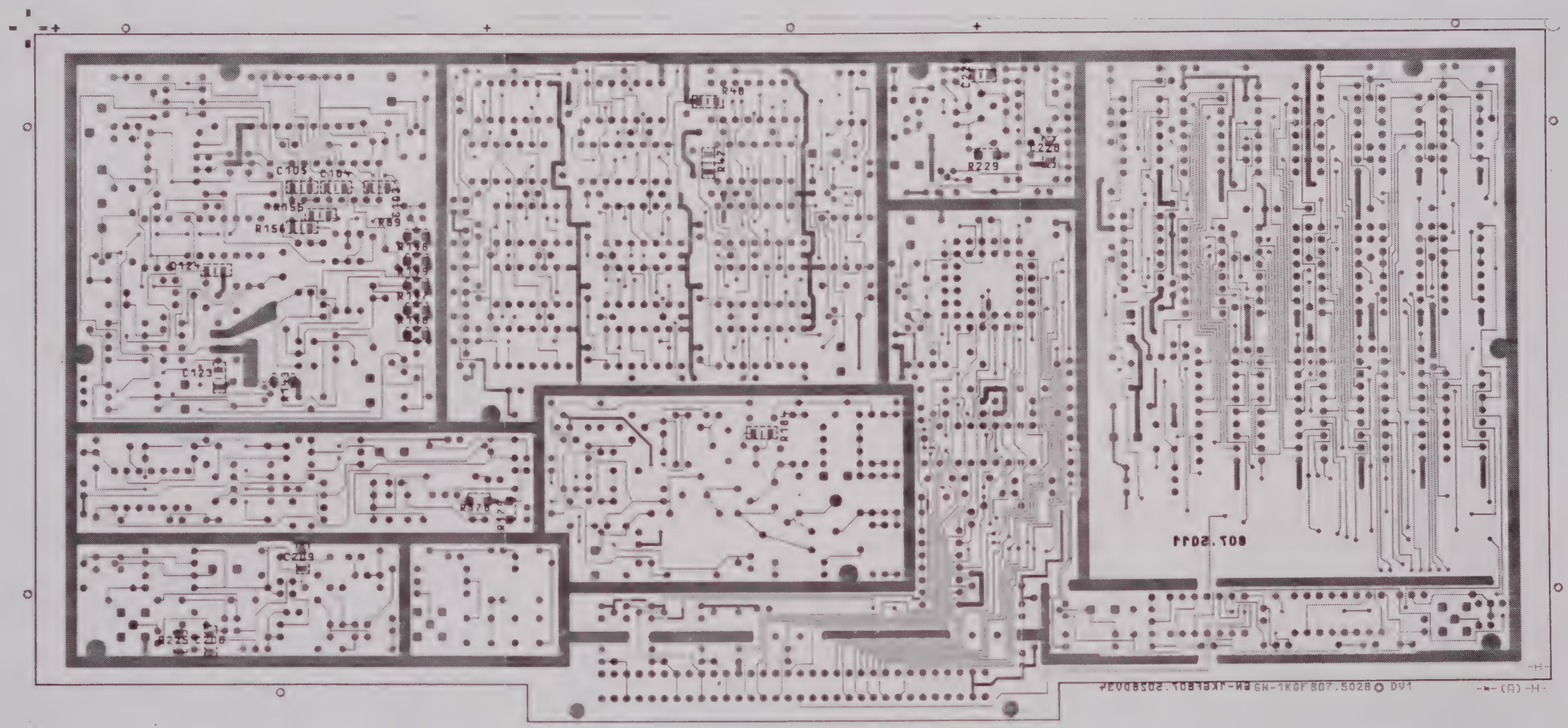

Variantenerklaerung / VERSION
VAR02 - Grundausfuehrung / BASIC MODEL

ACHTUNG: EGB!
ELEKTROSTATISCH GEFAEHRDETE BAUELEMENTE ERFORDERN EINE BESONDERE HANDHABUNG.
EINBAU UND BETRIEB NACH HVC 250

				MASSE OHNE TOLERANZANGABE -0.2 MM			MASSSTAB 1 : 1
							WERKSTOFF
B	32745	02.86	GN	1KEF	TAG	NAME	BENENNUNG Sweep-Synthesizer Z
I	32745	03.87	GN	BEARB.	07.88	GN	
O	37063 (26)	07.88	GN	GEPR.		GN	
				NORM			
				PLOTT	29. 7.88	*	
AEND. IND.	AENDERUNGS-MITTEILUNG	DATUM	NAME	ROHDE&SCHWARZ			ZEICHN.-NR. 807.5011.01 EE BLATT-NR. 2 V. BL.
				ZU GERAET FSA			REG.I.V. 806.4011V ERSTE Z.

FUER DIESE ZEICHNUNG BEHALTEN WIR UNS ALLE RECHTE VOR
DIESE ZEICHNUNG IST EIN SCHNERAUSDUCK, AENDERUNGEN KOENNEN NUR DURCH AENDERUNGEN DES DATENSATZES ERFOLGEN

ROHDE&SCHWARZ

SERVICE DOCUMENTATION

Reference 2

807.3019.02

Contents

		Page
6	**Service Instructions Reference 2**	6.1
6.1	**Function Description**	6.1
6.2	**Testing and Adjustment**	6 3
6.2.1	Preliminary Remarks	6 3
6.2.2	Power Supply	6 3
6.2.3	Settings	6 3
6.2.4	Checking the Stage V1	6 3
6.2.5	Adjusting the Frequency Doubler	6 3
6.2.6	Adjusting the Power Divider and Checking the 200-MHz Outputs	6 3
6.2.7	Checking the Decoupling of Outputs X1, X3, X4	6 4
6.3	**Troubleshooting**	6 4

Parts lists
Circuit diagrams
Component location plans

6 Service Instructions Reference 2

(See circuit diagram 807.3019 S)

6.1 Function Description

The reference 2 module is used to generate calibration signals of 100 MHz with an exact level and has a frequency doubler with several 200-MHz outputs which are decoupled from one another.

Amplifier stage V1 with decoupled outputs

The input signal is applied via X5 and C12 to the base of transistor V1 which operates in a common-emitter circuit.

The decoupling transformer L4 is connected to the output and is driven at low impedance via transformer L3

The two outputs of L4 are also designed as transforming series circuits to provide additional broadband decoupling.

Signals of +7 dBm decoupled from one another are present at X15/2 and X17/2.

Calibration source 100 MHz; –20.00 dBm

The signal from X24/3 is applied to N51D via R63, R65.

The differential amplifier formed together with D51C limits the signal and outputs it at N51B.

This in turn produces a differential amplifier with N51A and the signal which has now been limited twice is applied via C66, R78 to the 5-element lowpass (C69, C63, C70, L64, C71).

The 100-MHz signal with -20 dBm is available at X8 via the following attenuator.

The level depends on the DC current applied at R63.

An adjustable negative voltage is generated by N52 and the reference Zener diode V61 and applies a defined and constant current to R68 and R83.

The collector N51B has a second output which is available at X7 and which can be switched off via the PIN diodes V101 to V103.

Frequency doubler 100/200 MHz

The 100-MHz signal is applied from X17/3 with +7 dBm to V113 via C114 and R118.

L112 transforms the signal at V112 to opposite phase.

V111 represents the working point setting for the doubling stage

One of the transistors (V112 or V113) now conducts alternately on each half-wave and drives the resonant circuit L113, C119, C120 which is tuned to 200 MHz

The following bandpass outputs a level of +18 dBm at 200 MHz to X111/2.

Distribution stage 200 MHz

The 200-MHz signal is applied from X112 to the decoupled symmetry transformer L131, L132 via the attenuator R121, R122, R123.

One output (compensated with C131) contains a further decoupled power divider (L33, R132)

Series transformation circutis are provided at each of the three outputs in order to achieve goods far-off selectivity

200-MHz output stages

200-MHz isolating stages (example: stage V161)

V161 is driven via the input attenuating element R164, R165, R166 and via C164; L163 provides the base current.

R167 stabilizes the DC current working point and R168 determines the RF negative feedback. The collector current is applied to the output resonant circuit L164, C167, C168 via L102.

Coupling (C169) is followed by a further attenuating element.

C165 is used to obtain minimum feedback and makes up, together with the base-to-collector capacitor (V161) and the capacitors C167, C166, the circuit to the bridge.

Basic circuit diagram of isolating stages:

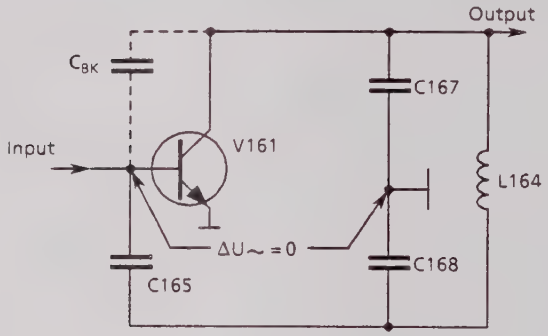

The following applies to the balanced bridge:

$$\frac{C_{BK}}{C165} = \frac{C167}{C168} \; and \; \Delta U\sim = 0\ V$$

Instrument bus interface

The octal flip-flop D241 can be loaded from the computer interface and thus switches transistor V242. This can then switch the signal at X7 on and off by means of the PIN diode switch V101, V102, V103.

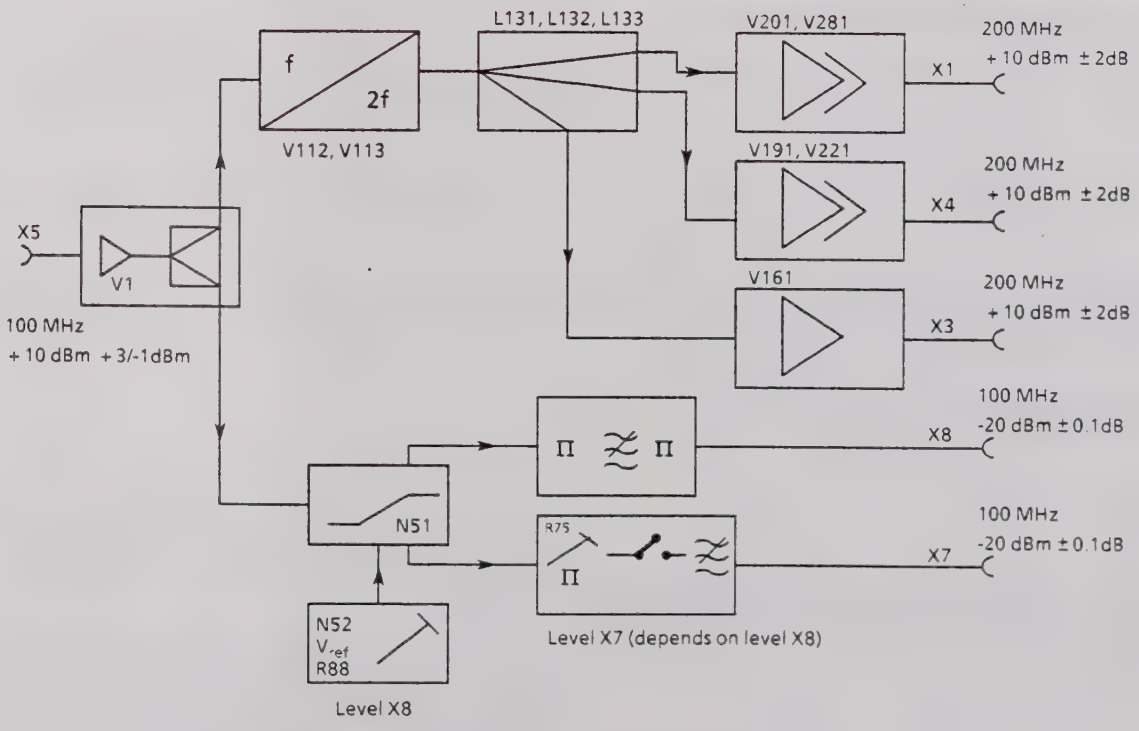

Fig. 6-1 Block diagram of reference 2 module

6.2 Testing and Adjustment

Equipment required

- Signal generator 100 to 200 MHz, Level + 10 dBm ± 1 dB
- Frequency analyzer, e.g. FSA
- Multimeter

6.2.1 Preliminary Remarks

Preliminary adjustments and repairs can be made on the module using the extender board and the coaxial SMC extension cables (both included in service kit) with the covers removed.

The interfaces within the module are designed for tasting as four-contact connector strips whose two inner contacts are linked by a jumper The two outer contacts are applied to ground

Caution: the jumpers must be inserted again following each measurement described.

6.2.2 Power Supply

X21/AC32	GNDD	Ground
X21/AC31	+ 5 V	approx 27 mA ± 20 %
X21/AC7	+ 15 V	approx 200 mA ± 20 %
X21/AC9	–15 V	approx. –40 mA ± 20 %

6.2.3 Settings

The module is always in operation when the instrument is switched on.

Output X7 (100 MHz, -20 dBm) is only activated during the CAL command.

The CAL command can be statically called up using the service function SF 1.52.01. SF 1.52.00 switches off the CAL command.

Q0 is then set by D241 to High. D241 (EXTREF = X10/C22 = High) is used to switch from internal reference to external reference in the reference 1 module.

6.2.4 Checking the Stage V1

- Check level at cable W31 (cable from reference 1) using frequency analyzer (100 MHz; 10 dBm ± 1.5 dB) and connect to X5 using extension cable.
- Measure level using frequency analyzer
  At X15/2: + 8 dBm + 2/-1 dB
  At X17/2: + 8 dBm + 2/-1 dB

Checking the decoupling of X15 and X16

- Leave X5 open-circuited
- Connect signal generator with 100 MHz, + 7 dBm ± 0.5 dB to X15/2.
- The signal at X17/2 must be < -20 dBm
- Interchange plugs X15/2 and X17/2 and repeat the measurement.

6.2.5 Adjusting the Frequency Doubler

- Connect X5 to W31 (cable from reference 1) via extension cable.
- Check the DC voltage working points:
  At X115: approx. 5.5 V
  At X116: approx. 4.7 V
  At X117: approx. 4.7 V
- Connect the frequency analyzer to X111/2 and adjust to max. level at 200 MHz using L112.
  Nominal value: + 18 dBm ± 2 dB

6.2.6 Adjusting the Power Divider and Checking the 200-MHz Outputs

Adjust the level to a maximum using the respective coils.

Adjustement	Frequency analyzer at	Nominal value
L134	X1	10 dBm ± 2 dB
L135	X3	10 dBm ± 2 dB
L137	X4	10 dBm ± 2 dB

6.2.7 Checking the Decoupling of Outputs X1, X3, X4

Connect the signal generator with 200 MHz and a level of 10 dBm ± 1 dB to the following sockets and measure the decoupling using the frequency analyzer.

Signal generator	Frequency analyzer	Measured value < (dB)
X3	X1	–45
X3	X4	–45
X1	X3	–70
X4	X3	–70
X1	X4	–70
X4	X1	–70

6.3 Troubleshooting

If a module fault is detected, test the module with the cover removed using the service kit (extender board and coaxial extension cable).

Refer to the adjustments when troubleshooting.

If an RF signal is missing in a branch, first measure the DC working point of the stage at the emitter.

Example:

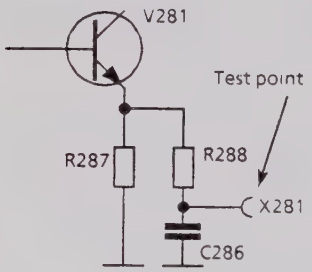

ROHDE&SCHWARZ

Schaltteillisten
Stromläufe
Bestückungspläne

Part lists
Circuit diagrams
Components plans

Listes des pièces détachées
Schémas de Circuit
Plans des composants

(R 29500 Bl. 2)
895.1000 Bl. 2

Kennz. Comp.No.	Benennung Designation	Sachnummer Stock No.	Hersteller Manufacturer	Bezeichnung Designation	enthalten in contained in
C1	CE 22UF-10+50% 63V 9X13 ELECTROLYTIC CAPACITOR	CE 006.7120	ROEDERST	EKM 00 CB 222 J	
C2	CC 330PF+-10%3X4R2000 CAPACITOR	CC 087.6970	VALVO	2222 63051 331	
C3	CC 2,7PF+-0,25PF3X4NP0 CERAMIC CAPACITOR	CC 087.6358	VALVO	2222 678 09278	
C4	CC 22PF+-2%4X5NP0 CAPACITOR	CC 087.6464	VALVO	2222 678 10229	
C5	CC 22PF+-2%3X4N750 CAPACITOR	CC 087.6829	VALVO	2222 678 58229	
C6	CE 3,3UF+-20%16V 5X 4X 7 ELECTROLYTIC CAPACITOR	CE 087.9311	ROEDERSTEI	ETR 1 3,3/16 20%	
C7	TRIMMWERT / SELECTED				
C8	CC 8,2PF+-0,25PF3X4NP0 CAPACITOR	CC 087.6412	VALVO	2222 678 09828	
C9	CC 6,8PF+-0,25PF3X4NP0 CAPACITOR	CC 087.6406	VALVO	2222 678 09688	
C10	CC 22PF+-2%4X5NP0 CAPACITOR	CC 087.6464	VALVO	2222 678 10229	
C11	CC 22PF+-2%3X4N750 CAPACITOR	CC 087.6829	VALVO	2222 678 58229	
C12	CC 330PF+-10%3X4R2000 CAPACITOR	CC 087.6970	VALVO	2222 63051 331	
C13	CC 220PF+-2%6X7N750 CAPACITOR	CC 087.6941	VALVO	2222 678 58221	
C21	CE 22UF-10+50% 63V 9X13 ELECTROLYTIC CAPACITOR NUR VAR/ONLY MOD: 03 MODEL 03 ONLY	CE 006.7120	ROEDERST	EKM 00 CB 222 J	
C22	CC 330PF+-10%3X4R2000 CAPACITOR NUR VAR/ONLY MOD: 03 MODEL 03 ONLY	CC 087.6970	VALVO	2222 63051 331	
C23	CC 2,7PF+-0,25PF3X4NP0 CERAMIC CAPACITOR NUR VAR/ONLY MOD: 03 MODEL 03 ONLY	CC 087.6358	VALVO	2222 678 09278	
C24	CC 22PF+-2%4X5NP0 CAPACITOR NUR VAR/ONLY MOD: 03 MODEL 03 ONLY	CC 087.6464	VALVO	2222 678 10229	
C25	CC 22PF+-2%4X5NP0 CAPACITOR NUR VAR/ONLY MOD: 03 MODEL 03 ONLY	CC 087.6464	VALVO	2222 678 10229	
C26	CE 3,3UF+-20%16V 5X 4X 7 ELECTROLYTIC CAPACITOR NUR VAR/ONLY MOD: 03 MODEL 03 ONLY	CE 087.9311	ROEDERSTEI	ETR 1 3,3/16 20%	
C27	TRIMMWERT / SELECTED NUR VAR/ONLY MOD: 03 MODEL 03 ONLY				
C28	CC 8,2PF+-0,25PF3X4NP0 CAPACITOR NUR VAR/ONLY MOD: 03 MODEL 03 ONLY	CC 087.6412	VALVO	2222 678 09828	
C29	CC 2,7PF+-0,25PF3X4NP0 CERAMIC CAPACITOR NUR VAR/ONLY MOD: 03 MODEL 03 ONLY	CC 087.6358	VALVO	2222 678 09278	
C30	CC 22PF+-2%4X5NP0 CAPACITOR NUR VAR/ONLY MOD: 03 MODEL 03 ONLY	CC 087.6464	VALVO	2222 678 10229	
C31	CC 22PF+-2%4X5NP0 CAPACITOR NUR VAR/ONLY MOD: 03 MODEL 03 ONLY	CC 087.6464	VALVO	2222 678 10229	
C32	CC 330PF+-10%3X4R2000 CAPACITOR NUR VAR/ONLY MOD: 03 MODEL 03 ONLY	CC 087.6970	VALVO	2222 63051 331	
C33	CC 220PF+-2%6X7N750 CAPACITOR NUR VAR/ONLY MOD: 03 MODEL 03 ONLY	CC 087.6941	VALVO	2222 678 58221	
C41	CE 22UF-10+50% 63V 9X13 ELECTROLYTIC CAPACITOR NUR VAR/ONLY MOD: 03	CE 006.7120	ROEDERST	EKM 00 CB 222 J	

Fü... diese Unterlage behalten wir uns alle Rechte vor

Kennz. Comp.No.	Benennung Designation	Sachnummer Stock No.	Hersteller Manufacturer	Bezeichnung Designation	enthalten in contained in
	MODEL 03 ONLY				
C42	CC 1NF+-10%63V K2000 CERAMIC CAPACITOR	CC 022.0784	VALVO	2222 63051 102	
	NUR VAR/ONLY MOD: 03				
	MODEL 03 ONLY				
C43	CE 3,3UF+-20%16V 5X 4X 7 ELECTROLYTIC CAPACITOR	CE 087.9311	ROEDERSTEI	ETR 1 3,3/16 20%	
	NUR VAR/ONLY MOD: 03				
	MODEL 03 ONLY				
C44	CC 330PF+-10%3X4R2000 CAPACITOR	CC 087.6970	VALVO	2222 63051 331	
	NUR VAR/ONLY MOD: 03				
	MODEL 03 ONLY				
C61	CC 470PF+-10%3X4R2000	CC 087.6993	VALVO	2222 63051 471	
..68	CAPACITOR				
C69	CC 18PF+-2%3X4NP0 CAPACITOR	CC 087.6458	VALVO	2222 678 10189	
C70	CC 39PF+-2%4X5NP0 CAPACITOR	CC 087.6493	VALVO	2222 678 10399	
C71	CC 18PF+-2%3X4NP0 CAPACITOR	CC 087.6458	VALVO	2222 678 10189	
C73	CK 100NF+-5%63V5RM MKT CAPACITOR	CK 099.2930	WIMA	MKS/2/63/0,1UF/5%	
C101	CC 470PF+-10%3X4R2000 CAPACITOR	CC 087.6993	VALVO	2222 63051 471	
C102	CC 470PF+-10%3X4R2000 CAPACITOR	CC 087.6993	VALVO	2222 63051 471	
C103	CC 18PF+-2%3X4NP0 CAPACITOR	CC 087.6458	VALVO	2222 678 10189	
C104	CC 39PF+-2%4X5NP0 CAPACITOR	CC 087.6493	VALVO	2222 678 10399	
C105	CC 10PF+-0,25PF3X4NP0 CAPACITOR	CC 087.6429	VALVO	2222 678 09109	
C106	CC 10PF+-0,25PF3X4NP0 CAPACITOR	CC 087.6429	VALVO	2222 678 09109	
C107	CC 4,7PF+-0,25PF3X4NP0 CAPACITOR	CC 087.6387	VALVO	2222 678 09478	
C111	CE 3,3UF+-20%16V 5X 4X 7 ELECTROLYTIC CAPACITOR	CE 087.9311	ROEDERSTEI	ETR 1 3,3/16 20%	
C112	CE 47UF-10+50% 40V 9X13 ELECTROLYTIC CAPACITOR	CE 006.7142	ROEDERST	EK 00 CB 247 G	
C113	CC 2,2NF+-10%100V5K1200VI CERAMIC CAPACITOR	CC 067.9022	UNION CARB	CK05BX222K	
C114	CC 220PF+-2%6X7N750 CAPACITOR	CC 087.6941	VALVO	2222 678 58221	
C115	CE 22UF-10+50% 63V 9X13 ELECTROLYTIC CAPACITOR	CE 006.7120	ROEDERST	EKM 00 CB 222 J	
C116	CC 2,2NF+-10%100V5K1200VI CERAMIC CAPACITOR	CC 067.9022	UNION CARB	CK05BX222K	
C117	CC 2,2NF+-10%100V5K1200VI CERAMIC CAPACITOR	CC 067.9022	UNION CARB	CK05BX222K	
C118	CC 2,2NF+-10%100V5K1200VI CERAMIC CAPACITOR	CC 067.9022	UNION CARB	CK05BX222K	
C119	CC 18PF+-2%3X4NP0 CAPACITOR	CC 087.6458	VALVO	2222 678 10189	
C120	CC 15PF+-2%3X4NP0 CAPACITOR	CC 087.6441	VALVO	2222 678 10159	
C121	CC 18PF+-2%3X4NP0 CAPACITOR	CC 087.6458	VALVO	2222 678 10189	
C122	CC 6,8PF+-0,25PF3X4NP0 CAPACITOR	CC 087.6406	VALVO	2222 678 09688	
C123	CC 12PF+-2%3X4NP0 CAPACITOR	CC 087.6435	VALVO	2222 678 10129	
C124	CC 15PF+-2%3X4NP0 CAPACITOR	CC 087.6441	VALVO	2222 678 10159	
C131	CC 12PF+-2%3X4NP0 CAPACITOR	CC 087.6435	VALVO	2222 678 10129	
C132	TRIMMWERT / SELECTED				
C133	CC 33PF+-2%4X5NP0 CAPACITOR	CC 087.6487	VALVO	2222 678 10339	
C134	CC 5,6PF+-0,25PF50V NP0 CERAMIC CHIP CAPACITOR	CC 007.8220	VITRAMON	VJ1206 A5R6 C FAT	
C135	CC 33PF+-2%4X5NP0 CAPACITOR	CC 087.6487	VALVO	2222 678 10339	
C136	CC 33PF+-2%4X5NP0 CAPACITOR	CC 087.6487	VALVO	2222 678 10339	
C137	CC 5,6PF+-0,25PF50V NP0 CERAMIC CHIP CAPACITOR	CC 007.8220	VITRAMON	VJ1206 A5R6 C FAT	

Kennz. Comp.No.	Benennung Designation	Sachnummer Stock No.	Hersteller Manufacturer	Bezeichnung Designation	enthalten in contained in
C138	CC 33PF+-2%4X5NP0 CAPACITOR	CC 087.6487	VALVO	2222 678 10339	
C139	CC 15PF+-2%3X4NP0 CAPACITOR	CC 087.6441	VALVO	2222 678 10159	
C140	TRIMMWERT / SELECTED				
C143	CC 68PF+-2%6X7NP0 CAPACITOR	CC 087.6529	VALVO	2222 678 10689	
C144	CC 5,6PF+-0,25PF50V NP0 CERAMIC CHIP CAPACITOR	CC 007.8220	VITRAMON	VJ1206 A5R6 C FAT	
C145	CC 33PF+-2%4X5NP0 CAPACITOR	CC 087.6487	VALVO	2222 678 10339	
C149	TRIMMWERT / SELECTED				
C161	CE 22UF-10+50% 63V 9X13 ELECTROLYTIC CAPACITOR	CE 006.7120	ROEDERST	EKM 00 CB 222 J	
C162	CC 1NF+-10%63V K2000 CERAMIC CAPACITOR	CC 022.0784	VALVO	2222 63051 102	
C163	CE 3,3UF+-20%16V 5X 4X 7 ELECTROLYTIC CAPACITOR	CE 087.9311	ROEDERSTEI	ETR 1 3,3/16 20%	
C164	CC 330PF+-10%3X4R2000 CAPACITOR	CC 087.6970	VALVO	2222 63051 331	
C165	CC 2,2PF+-0,25PF3X4NP0 CAPACITOR	CC 087.6341	VALVO	2222 678 09228	
C166	CC 82PF+-2%6X7NP0 CAPACITOR	CC 087.6535	VALVO	2222 678 10829	
C167	CC 6,8PF+-0,25PF3X4NP0 CAPACITOR	CC 087.6406	VALVO	2222 678 09688	
C168	CC 6,8PF+-0,25PF3X4NP0 CAPACITOR	CC 087.6406	VALVO	2222 678 09688	
C169	CC 330PF+-10%3X4R2000 CAPACITOR	CC 087.6970	VALVO	2222 63051 331	
C181	CE 22UF-10+50% 63V 9X13 ELECTROLYTIC CAPACITOR	CE 006.7120	ROEDERST	EKM 00 CB 222 J	
C182	CC 1NF+-10%63V K2000 CERAMIC CAPACITOR	CC 022.0784	VALVO	2222 63051 102	
C183	CE 3,3UF+-20%16V 5X 4X 7 ELECTROLYTIC CAPACITOR	CE 087.9311	ROEDERSTEI	ETR 1 3,3/16 20%	
C184	CC 330PF+-10%3X4R2000 CAPACITOR	CC 087.6970	VALVO	2222 63051 331	
C185	CC 1,5PF+-0,25PF3X4P100 CAPACITOR	CC 087.6193	VALVO	2222 678 03158	
C186	CC 82PF+-2%6X7NP0 CAPACITOR	CC 087.6535	VALVO	2222 678 10829	
C187	CC 6,8PF+-0,25PF3X4NP0 CAPACITOR	CC 087.6406	VALVO	2222 678 09688	
C188	CC 6,8PF+-0,25PF3X4NP0 CAPACITOR	CC 087.6406	VALVO	2222 678 09688	
C189	CC 330PF+-10%3X4R2000 CAPACITOR	CC 087.6970	VALVO	2222 63051 331	
C201	CE 22UF-10+50% 63V 9X13 ELECTROLYTIC CAPACITOR	CE 006.7120	ROEDERST	EKM 00 CB 222 J	
C202	CC 1NF+-10%63V K2000 CERAMIC CAPACITOR	CC 022.0784	VALVO	2222 63051 102	
C203	CE 3,3UF+-20%16V 5X 4X 7 ELECTROLYTIC CAPACITOR	CE 087.9311	ROEDERSTEI	ETR 1 3,3/16 20%	
C204	CC 330PF+-10%3X4R2000 CAPACITOR	CC 087.6970	VALVO	2222 63051 331	
C205	CC 1,5PF+-0,25PF3X4P100 CAPACITOR	CC 087.6193	VALVO	2222 678 03158	
C206	CC 82PF+-2%6X7NP0 CAPACITOR	CC 087.6535	VALVO	2222 678 10829	
C207	CC 8,2PF+-0,25PF3X4NP0 CAPACITOR	CC 087.6412	VALVO	2222 678 09828	
C208	CC 8,2PF+-0,25PF3X4NP0 CAPACITOR	CC 087.6412	VALVO	2222 678 09828	
C209	CC 330PF+-10%3X4R2000 CAPACITOR	CC 087.6970	VALVO	2222 63051 331	
C221	CE 22UF-10+50% 63V 9X13 ELECTROLYTIC CAPACITOR	CE 006.7120	ROEDERST	EKM 00 CB 222 J	
C222	CC 1NF+-10%63V K2000 CERAMIC CAPACITOR	CC 022.0784	VALVO	2222 63051 102	
C223	CE 3,3UF+-20%16V 5X 4X 7 ELECTROLYTIC CAPACITOR	CE 087.9311	ROEDERSTEI	ETR 1 3,3/16 20%	
C224	CC 330PF+-10%3X4R2000 CAPACITOR	CC 087.6970	VALVO	2222 63051 331	
C225	CC 1,5PF+-0,25PF3X4P100 CAPACITOR	CC 087.6193	VALVO	2222 678 03158	
C226	CC 82PF+-2%6X7NP0 CAPACITOR	CC 087.6535	VALVO	2222 678 10829	

Diese Unterlage behalten wir uns alle Rechte vor

Kennz. Comp.No.	Benennung Designation	Sachnummer Stock No.	Hersteller Manufacturer	Bezeichnung Designation	enthalten in contained in
C227	CC 8,2PF+-0,25PF3X4NP0 CAPACITOR	CC 087.6412	VALVO	2222 678 09828	
C228	CC 8,2PF+-0,25PF3X4NP0 CAPACITOR	CC 087.6412	VALVO	2222 678 09828	
C229	CC 330PF+-10%3X4R2000 CAPACITOR	CC 087.6970	VALVO	2222 63051 331	
C241	CE 22UF-10+50% 63V 9X13 ELECTROLYTIC CAPACITOR	CE 006.7120	ROEDERST	EKM 00 CB 222 J	
C242	CE 47UF-10+50% 40V 9X13 ELECTROLYTIC CAPACITOR	CE 006.7142	ROEDERST	EK 00 CB 247 G	
C243	CE 22UF-10+50% 63V 9X13 ELECTROLYTIC CAPACITOR	CE 006.7120	ROEDERST	EKM 00 CB 222 J	
C246	CC 100PF+-1%50V NP0 1206 CERAMIC CHIP CAPACITOR	CC 099.8415	VITRAMON	VJ1206 A 101 F FAT	
C247	CC 33PF+-1%50V NP0 1206 CERAMIC CHIP CAPACITOR	CC 099.8780	VITRAMON	VJ1206 A330F FAT	
C248	CC 100PF+-1%50V NP0 1206 CERAMIC CHIP CAPACITOR	CC 099.8415	VITRAMON	VJ1206 A 101 F FAT	
C249	CC 33PF+-1%50V NP0 1206 CERAMIC CHIP CAPACITOR	CC 099.8780	VITRAMON	VJ1206 A330F FAT	
C250	CC 100PF+-1%50V NP0 1206 CERAMIC CHIP CAPACITOR	CC 099.8415	VITRAMON	VJ1206 A 101 F FAT	
C251	CC 33PF+-1%50V NP0 1206 CERAMIC CHIP CAPACITOR	CC 099.8780	VITRAMON	VJ1206 A330F FAT	
C252	CC 33PF+-1%50V NP0 1206 CERAMIC CHIP CAPACITOR	CC 099.8780	VITRAMON	VJ1206 A330F FAT	
C253	CC 100PF+-1%50V NP0 1206 CERAMIC CHIP CAPACITOR	CC 099.8415	VITRAMON	VJ1206 A 101 F FAT	
C254	CC 100PF+-1%50V NP0 1206 CERAMIC CHIP CAPACITOR	CC 099.8415	VITRAMON	VJ1206 A 101 F FAT	
C255	CC 33PF+-1%50V NP0 1206 CERAMIC CHIP CAPACITOR	CC 099.8780	VITRAMON	VJ1206 A330F FAT	
C281	CE 22UF-10+50% 63V 9X13 ELECTROLYTIC CAPACITOR	CE 006.7120	ROEDERST	EKM 00 CB 222 J	
C282	CC 1NF+-10%63V K2000 CERAMIC CAPACITOR	CC 022.0784	VALVO	2222 63051 102	
C283	CE 3,3UF+-20%16V 5X 4X 7 ELECTROLYTIC CAPACITOR	CE 087.9311	ROEDERSTEI	ETR 1 3,3/16 20%	
C284	CC 330PF+-10%3X4R2000 CAPACITOR	CC 087.6970	VALVO	2222 63051 331	
C285	CC 1,5PF+-0,25PF3X4P100 CAPACITOR	CC 087.6193	VALVO	2222 678 03158	
C286	CC 82PF+-2%6X7NP0 CAPACITOR	CC 087.6535	VALVO	2222 678 10829	
C287	CC 8,2PF+-0,25PF3X4NP0 CAPACITOR	CC 087.6412	VALVO	2222 678 09828	
C288	CC 8,2PF+-0,25PF3X4NP0 CAPACITOR	CC 087.6412	VALVO	2222 678 09828	
C289	CC 330PF+-10%3X4R2000 CAPACITOR	CC 087.6970	VALVO	2222 63051 331	
D241	BL PC74HC377P 8XD-FF EN OCTAL D-FLIP-FLOP	BL 806.0045	VALVO	PC74HC377P	
L1	LD 1,50UH10%0,220HM0,560A CHOKE	LD 067.2886	DELEVAN	DROSSEL 1025-24	
L2	LD 0,68UH10%0,600HM0,500A CHOKE	LD 067.2840	DELEVAN	DROSSEL1025-16	
L3	LU UEBERTRAGER TRANSFORMER	807.4067			
L4	LU UEBERTRAGER TRANSFORMER	807.4067			
L5	LD 0,33UH10%0,220HM0,830A CHOKE	LD 067.2805	DELEVAN	DROSSEL1025--08	
L21	LD 1,50UH10%0,220HM0,560A CHOKE NUR VAR/ONLY MOD: 03 MODEL 03 ONLY	LD 067.2886	DELEVAN	DROSSEL 1025-24	
L22	LD 1,00UH10%1,000HM0,390A CHOKE NUR VAR/ONLY MOD: 03 MODEL 03 ONLY	LD 067.2863	DELEVAN	1025-20	
L23	LU UEBERTRAGER TRANSFORMER NUR VAR/ONLY MOD: 03 MODEL 03 ONLY	451.1937			
L24	LU UEBERTRAGER TRANSFORMER NUR VAR/ONLY MOD: 03	451.1937			

Kennz. Comp.No.	Benennung Designation	Sachnummer Stock No.	Hersteller Manufacturer	Bezeichnung Designation	enthalten in contained in
L25	MODEL 03 ONLY LD 1,00UH10%1,000HMO,390A CHOKE NUR VAR/ONLY MOD: 03	LD 067.2863	DELEVAN	1025-20	
L41	MODEL 03 ONLY LD 1,50UH10%0,220HMO,560A CHOKE NUR VAR/ONLY MOD: 03	LD 067.2886	DELEVAN	DROSSEL 1025-24	
L42	MODEL 03 ONLY LD 1,50UH10%0,220HMO,560A CHOKE NUR VAR/ONLY MOD: 03	LD 067.2886	DELEVAN	DROSSEL 1025-24	
L43	MODEL 03 ONLY LD 1,50UH10%0,220HMO,560A CHOKE NUR VAR/ONLY MOD: 03	LD 067.2886	DELEVAN	DROSSEL 1025-24	
L61	MODEL 03 ONLY LD 1,00UH10%1,000HMO,390A CHOKE	LD 067.2863	DELEVAN	1025-20	
L62	LD 1,00UH10%1,000HMO,390A CHOKE	LD 067.2863	DELEVAN	1025-20	
L63	LD 100NH 10% 0,080HM 1,4A CHOKE	LD 067.2740	DELEVAN	DROSSEL1025-94	
L64	LD 100NH 10% 0,080HM 1,4A CHOKE	LD 067.2740	DELEVAN	DROSSEL1025-94	
L101	LD 2,20UH10%0,400HMO,415A CHOKE	LD 067.2905	DELEVAN	DROSSEL1025-28	
L102	LD 100NH 10% 0,080HM 1,4A CHOKE	LD 067.2740	DELEVAN	DROSSEL1025-94	
L103	LD 100NH 10% 0,080HM 1,4A CHOKE	LD 067.2740	DELEVAN	DROSSEL1025-94	
L111	LD 2,20UH10%0,400HMO,415A CHOKE	LD 067.2905	DELEVAN	DROSSEL1025-28	
L112	LU UEBERTRAGER TRANSFORMER	807.4067			
L113	LD SPULE 30NH 1,5W FE-K CHOKE	300.6647	COMPONEX	E521HN-010023	
L114	LD 0,15UH10%0,100HM1,230A CHOKE	LD 067.2763	DELEVAN	DROSSEL1025-00	
L115	LD 100NH 10% 0,080HM 1,4A CHOKE	LD 067.2740	DELEVAN	DROSSEL1025-94	
L116	LD 100NH 10% 0,080HM 1,4A CHOKE	LD 067.2740	DELEVAN	DROSSEL1025-94	
L131	LU UEBERTRAGER TRANSFORMER	807.3083			
L132	LU UEBERTRAGER TRANSFORMER	807.4067			
L133	LU UEBERTRAGER TRANSFORMER	807.4067			
L134	LD SPULE 115NH 7,5W ALU-K COIL-CORE	807.3077	TOKO	E521 AN-070023	
L135	LD SPULE 115NH 7,5W ALU-K COIL-CORE	807.3077	TOKO	E521 AN-070023	
L137	LD SPULE 115NH 7,5W ALU-K COIL-CORE	807.3077	TOKO	E521 AN-070023	
L161	LD 1,00UH10%1,000HMO,390A CHOKE	LD 067.2863	DELEVAN	1025-20	
L162	LD 1,00UH10%1,000HMO,390A CHOKE	LD 067.2863	DELEVAN	1025-20	
L163	LD 1,00UH10%1,000HMO,390A CHOKE	LD 067.2863	DELEVAN	1025-20	
L164	LD 100NH 10% 0,080HM 1,4A CHOKE	LD 067.2740	DELEVAN	DROSSEL1025-94	
L181	LD 1,00UH10%1,000HMO,390A CHOKE	LD 067.2863	DELEVAN	1025-20	
L182	LD 1,00UH10%1,000HMO,390A CHOKE	LD 067.2863	DELEVAN	1025-20	
L183	LD 1,00UH10%1,000HMO,390A CHOKE	LD 067.2863	DELEVAN	1025-20	
L184	LD 100NH 10% 0,080HM 1,4A CHOKE	LD 067.2740	DELEVAN	DROSSEL1025-94	
L201	LD 1,00UH10%1,000HMO,390A CHOKE	LD 067.2863	DELEVAN	1025-20	
L202	LD 1,00UH10%1,000HMO,390A CHOKE	LD 067.2863	DELEVAN	1025-20	
L203	LD 1,00UH10%1,000HMO,390A CHOKE	LD 067.2863	DELEVAN	1025-20	

...se Unterlage behalten wir ...ins alle Rechte vor

Kennz. Comp.No.	Benennung Designation	Sachnummer Stock No.	Hersteller Manufacturer	Bezeichnung Designation	enthalten in contained in
L204	LD 100NH 10% 0,080HM 1,4A CHOKE	LD 067.2740	DELEVAN	DROSSEL1025-94	
L221	LD 1,00UH10%1,000HMO,390A CHOKE	LD 067.2863	DELEVAN	1025-20	
L222	LD 1,00UH10%1,000HMO,390A CHOKE	LD 067.2863	DELEVAN	1025-20	
L223	LD 1,00UH10%1,000HMO,390A CHOKE	LD 067.2863	DELEVAN	1025-20	
L224	LD 100NH 10% 0,080HM 1,4A CHOKE	LD 067.2740	DELEVAN	DROSSEL1025-94	
L241	LD UKW-DR.Z=750 OHM 50MHZ CHOKE	LD 026.4578	VALVO	431202036641	
L281	LD 1,00UH10%1,000HMO,390A CHOKE	LD 067.2863	DELEVAN	1025-20	
L282	LD 1,00UH10%1,000HMO,390A CHOKE	LD 067.2863	DELEVAN	1025-20	
L283	LD 1,00UH10%1,000HMO,390A CHOKE	LD 067.2863	DELEVAN	1025-20	
L284	LD 100NH 10% 0,080HM 1,4A CHOKE	LD 067.2740	DELEVAN	DROSSEL1025-94	
N51	AK CA3246 2+3XN TR.ARRAY TRANSISTOR ARRAY	807.3102	RCA	CA3246E	
N52	BO LF155J BIFET OPAMP OPERATIONAL AMPLIFIER	BO 343.1518	MOTOROLA	LF155J	
R1	RL 0,35W 10,0 OHM+-1%TK50 RESISTOR	RL 082.8852	DRALORIC	SMA0207/100HM-F-D	
R2	RL 0,35W 1,82KOHM+-1%TK50 RESISTOR	RL 082.2277	DRALORIC	SMA0207/1,82K-F-C	
R3	RL 0,35W 2,74KOHM+-1%TK50 RESISTOR	RL 083.0926	DRALORIC	SMA0207/2,74K-F-D	
R4	RL 0,35W 150 OHM+-1%TK50 RESISTOR	RL 082.9942	DRALORIC	SMA0207/1500HM-F-D	
R5	RL 0,35W 68,1 OHM+-1%TK50 RESISTOR	RL 082.9636	DRALORIC	SMA0207/68,10HM-F-D	
R6	RL 0,35W 150 OHM+-1%TK50 RESISTOR	RL 082.9942	DRALORIC	SMA0207/1500HM-F-D	
R7	RL 0,35W18,20 OHM+-1%TK50 RESISTOR	RL 082.9107	DRALORIC	SMA0207/18,20HM-F-D	
R8	RL 0,35W2,21 OHM+-1%TK50 METALFILMRESISTOR	RL 099.7948	RESISTA	MK2 2,21 OHM 1% TK50	
R9	RL 0,35W2,21 OHM+-1%TK50 METALFILMRESISTOR	RL 099.7948	RESISTA	MK2 2,21 OHM 1% TK50	
R10	RL 0,35W 56,2 OHM+-1%TK50 RESISTOR	RL 082.9571	DRALORIC	SMA0207/56,20HM-F-D	
R11	RL 0,35W2,21 OHM+-1%TK50 METALFILMRESISTOR	RL 099.7948	RESISTA	MK2 2,21 OHM 1% TK50	
R12	RL 0,35W2,21 OHM+-1%TK50 METALFILMRESISTOR	RL 099.7948	RESISTA	MK2 2,21 OHM 1% TK50	
R15	RL 0,35W 61,9 OHM+-1%TK50 RESISTOR	RL 082.9607	DRALORIC	SMA0207/61,90HM-F-D	
R21	RL 0,35W 10,0 OHM+-1%TK50 RESISTOR NUR VAR/ONLY MOD: 03 MODEL 03 ONLY	RL 082.8852	DRALORIC	SMA0207/100HM-F-D	
R22	RL 0,35W 1,82KOHM+-1%TK50 RESISTOR NUR VAR/ONLY MOD: 03 MODEL 03 ONLY	RL 082.2277	DRALORIC	SMA0207/1,82K-F-C	
R23	RL 0,35W 2,74KOHM+-1%TK50 RESISTOR NUR VAR/ONLY MOD: 03 MODEL 03 ONLY	RL 083.0926	DRALORIC	SMA0207/2,74K-F-D	
R24	RL 0,35W 82,5 OHM+-1%TK50 RESISTOR NUR VAR/ONLY MOD: 03 MODEL 03 ONLY	RL 082.9707	DRALORIC	SMA0207/82,50HM-F-D	
R25	RL 0,35W 68,1 OHM+-1%TK50 RESISTOR NUR VAR/ONLY MOD: 03 MODEL 03 ONLY	RL 082.9636	DRALORIC	SMA0207/68,10HM-F-D	
R26	RL 0,35W 150 OHM+-1%TK50 RESISTOR NUR VAR/ONLY MOD: 03 MODEL 03 ONLY	RL 082.9942	DRALORIC	SMA0207/1500HM-F-D	
R27	RL 0,35W 82,5 OHM+-1%TK50 RESISTOR NUR VAR/ONLY MOD: 03	RL 082.9707	DRALORIC	SMA0207/82,50HM-F-D	

Kennz. Comp.No.	Benennung Designation	Sachnummer Stock No.	Hersteller Manufacturer	Bezeichnung Designation	enthalten in contained in
	MODEL 03 ONLY				
R28	RL 0,35W 61,9 OHM+-1%TK50 RESISTOR	RL 082.9607	DRALORIC	SMA0207/61,9OHM-F-D	
	NUR VAR/ONLY MOD: 03				
	MODEL 03 ONLY				
R29	RL 0-OHM-WIDERST. 0204 0-OHM RESISTOR	RL 069.0000	DRALORIC	OMA 0204	
	NUR VAR/ONLY MOD: 02				
	MODEL 02 ONLY				
R30	RL 0-OHM-WIDERST. 0204 0-OHM RESISTOR	RL 069.0000	DRALORIC	OMA 0204	
	NUR VAR/ONLY MOD: 02				
	MODEL 02 ONLY				
R41	RL 0,35W 274 OHM+-1%TK50 RESISTOR	RL 083.0178	DRALORIC	SMA0207/274OHM-F-D	
	NUR VAR/ONLY MOD: 03				
	MODEL 03 ONLY				
R42	RL 0,35W 2,21KOHM+-1%TK50 RESISTOR	RL 082.2477	DRALORIC	SMA 0207/2,21K-F-C	
	NUR VAR/ONLY MOD: 03				
	MODEL 03 ONLY				
R43	RL 0,35W 2,74KOHM+-1%TK50 RESISTOR	RL 083.0926	DRALORIC	SMA0207/2,74K-F-D	
	NUR VAR/ONLY MOD: 03				
	MODEL 03 ONLY				
R44	RL 0,35W18,20 OHM+-1%TK50 RESISTOR	RL 082.9107	DRALORIC	SMA0207/18,2OHM-F-D	
	NUR VAR/ONLY MOD: 03				
	MODEL 03 ONLY				
R45	RL 0,35W 332 OHM+-1%TK50 RESISTOR	RL 083.0255	DRALORIC	SMA0207/332OHM-F-D	
	NUR VAR/ONLY MOD: 03				
	MODEL 03 ONLY				
R46	RL 0,35W 332 OHM+-1%TK50 RESISTOR	RL 083.0255	DRALORIC	SMA0207/332OHM-F-D	
	NUR VAR/ONLY MOD: 03				
	MODEL 03 ONLY				
R51	RL 0,35W 332 OHM+-1%TK50 RESISTOR	RL 083.0255	DRALORIC	SMA0207/332OHM-F-D	
	NUR VAR/ONLY MOD: 03				
	MODEL 03 ONLY				
R52	RL 0,35W 56,2 OHM+-1%TK50 RESISTOR	RL 082.9571	DRALORIC	SMA0207/56,2OHM-F-D	
R53	RL 0,35W2,21 OHM+-1%TK50 METALFILMRESISTOR	RL 099.7948	RESISTA	MK2 2,21 OHM 1% TK50	
R54	RL 0,35W2,21 OHM+-1%TK50 METALFILMRESISTOR	RL 099.7948	RESISTA	MK2 2,21 OHM 1% TK50	
R61	RL 0,35W22,10 OHM+-1%TK50 RESISTOR	RL 082.9188	DRALORIC	SMA0207/22,1OHM-F-D	
R62	RL 0,35W 100 OHM+-1%TK50 RESISTOR	RL 082.6543	DRALORIC	SMA0207/100/HM-F-D	
R63	RL 0,35W 392 OHM+-1%TK50 RESISTOR	RL 082.2183	DRALORIC	SMA0207/392K-F-C	
R64	RL 0,35W 56,2 OHM+-1%TK50 RESISTOR	RL 082.9571	DRALORIC	SMA0207/56,2OHM-F-D	
R65	RL 0,35W 100 OHM+-1%TK50 RESISTOR	RL 082.6543	DRALORIC	SMA0207/100/HM-F-D	
R66	RL 0,35W 475 OHM+-1%TK50 RESISTOR	RL 083.0390	DRALORIC	SMA0207/475OHM-F-D	
R67	RL 0,35W 100 OHM+-1%TK50 RESISTOR	RL 082.6543	DRALORIC	SMA0207/100/HM-F-D	
R68	RL 0,35W 475 OHM+-1%TK50 RESISTOR	RL 083.0390	DRALORIC	SMA0207/475OHM-F-D	
R69	RL 0,35W 1,21KOHM+-1%TK50 RESISTOR	RL 083.0655	DRALORIC	SMA0207/1,21K-F-D	
R70	RL 0,35W 121 OHM+-1%TK50 RESISTOR	RL 082.9859	DRALORIC	SMA0207/121OHM-F-D	
R71	RL 0,35W 100 OHM+-1%TK50 RESISTOR	RL 082.6543	DRALORIC	SMA0207/100/HM-F-D	
R72	RL 0,35W22,10 OHM+-1%TK50 RESISTOR	RL 082.9188	DRALORIC	SMA0207/22,1OHM-F-D	
R73	RL 0,35W 56,2 OHM+-1%TK50 RESISTOR	RL 082.9571	DRALORIC	SMA0207/56,2OHM-F-D	
R74	RL 0,35W 150 OHM+-1%TK50 RESISTOR	RL 082.9942	DRALORIC	SMA0207/150OHM-F-D	
R75	RS 0,75W 1KOHM+-10%CERMET DEPOS.-CARBON POTENTIOMET	RS 037.7367	BOURNS	3006P-1-1 KOHM+-10%	

...se Unterlage behalten wir ...uns alle Rechte vor

Kennz. Comp.No.	Benennung Designation	Sachnummer Stock No.	Hersteller Manufacturer	Bezeichnung Designation	enthalten in contained in
R76	RL 0,35W 100 OHM+-1%TK50 RESISTOR	RL 082.6543	DRALORIC	SMA0207/100/HM-F-D	
R77	RL 0,35W 100 OHM+-1%TK50 RESISTOR	RL 082.6543	DRALORIC	SMA0207/100/HM-F-D	
R78	RL 0,35W 121 OHM+-1%TK50 RESISTOR	RL 082.9859	DRALORIC	SMA0207/1210HM-F-D	
R79	RL 0,35W 56,2 OHM+-1%TK50 RESISTOR	RL 082.9571	DRALORIC	SMA0207/56,20HM-F-D	
R80	RL 0,35W 47,5 OHM+-1%TK50 RESISTOR	RL 082.9507	DRALORIC	SMA0207/47,50HM-F-D	
R81	RL 0,35W 121 OHM+-1%TK50 RESISTOR	RL 082.9859	DRALORIC	SMA0207/1210HM-F-D	
R82	RL 0,35W 121 OHM+-1%TK50 RESISTOR	RL 082.9859	DRALORIC	SMA0207/1210HM-F-D	
R83	RL 0,35W 475 OHM+-1%TK50 RESISTOR	RL 083.0390	DRALORIC	SMA0207/4750HM-F-D	
R84	RL 0,35W 221 OHM+-1%TK50 RESISTOR	RL 083.0084	DRALORIC	SMA0207/2210HM-F-D	
R85	RL 0,35W 2,74KOHM+-1%TK50 RESISTOR	RL 083.0926	DRALORIC	SMA0207/2,74K-F-D	
R86	RL 0,35W 274 OHM+-1%TK50 RESISTOR	RL 083.0178	DRALORIC	SMA0207/2740HM-F-D	
R87	RL 0,35W 4,75KOHM+-1%TK50 RESISTOR	RL 083.1097	DRALORIC	SMA0207/4,75K-F-D	
R88	RS 0,75W10KOHM+-10%CERMET DEPOS.-CARBON POTENTIOMET	RS 037.7396	BOURNS	3006P-1-10 KOHM+-10%	
R89	RL 0,35W 392 OHM+-1%TK50 RESISTOR	RL 082.2183	DRALORIC	SMA0207/392K-F-C	
R101	RL 0,35W 221 OHM+-1%TK50 RESISTOR	RL 083.0084	DRALORIC	SMA0207/2210HM-F-D	
R102	RL 0,35W22,10 OHM+-1%TK50 RESISTOR	RL 082.9188	DRALORIC	SMA0207/22,10HM-F-D	
R103	RL 0,35W 150 OHM+-1%TK50 RESISTOR	RL 082.9942	DRALORIC	SMA0207/1500HM-F-D	
R111	RL 0,35W 4,75KOHM+-1%TK50 RESISTOR	RL 083.1097	DRALORIC	SMA0207/4,75K-F-D	
R112	RL 0,35W 1KOHM+-1%TK50 RESISTOR	RL 082.2160	DRALORIC	SMA0207/1K-F-C	
R113	RL 0,35W 3,32KOHM+-1%TK50 RESISTOR	RL 083.0990	DRALORIC	SMA0207/3,32K-F-D	
R114	RL 0,35W 10,0 OHM+-1%TK50 RESISTOR	RL 082.8852	DRALORIC	SMA0207/100HM-F-D	
R115	RL 0,35W 2,21KOHM+-1%TK50 RESISTOR	RL 082.2477	DRALORIC	SMA 0207/2,21K-F-C	
R116	RL 0,35W 332 OHM+-1%TK50 RESISTOR	RL 083.0255	DRALORIC	SMA0207/3320HM-F-D	
R117	RL 0,35W15 OHM 1%TK50 RESISTOR	RL 082.9020	DRALORIC	SMA0207/150HM-F-D	
R118	RL 0,35W15 OHM 1%TK50 RESISTOR	RL 082.9020	DRALORIC	SMA0207/150HM-F-D	
R119	RL 0,35W 332 OHM+-1%TK50 RESISTOR	RL 083.0255	DRALORIC	SMA0207/3320HM-F-D	
R120	RL 0,35W 10,0 OHM+-1%TK50 RESISTOR	RL 082.8852	DRALORIC	SMA0207/100HM-F-D	
R121	RL 0,35W 182 OHM+-1%TK50 RESISTOR	RL 083.0010	DRALORIC	SMA0207/1820HM-F-D	
R122	RL 0,35W27,40 OHM+-1%TK50 RESISTOR	RL 082.9271	DRALORIC	SMA0207/27,40HM-F-D	
R123	RL 0,35W 182 OHM+-1%TK50 RESISTOR	RL 083.0010	DRALORIC	SMA0207/1820HM-F-D	
R124	RL 0,35W2,21 OHM+-1%TK50 METALFILMRESISTOR	RL 099.7948	RESISTA	MK2 2,21 OHM 1% TK50	
R131	RL 0,35W22,10 OHM+-1%TK50 RESISTOR	RL 082.9188	DRALORIC	SMA0207/22,10HM-F-D	
R132	RL 0,35W 121 OHM+-1%TK50 RESISTOR	RL 082.9859	DRALORIC	SMA0207/1210HM-F-D	
R161	RL 0,35W 274 OHM+-1%TK50 RESISTOR	RL 083.0178	DRALORIC	SMA0207/2740HM-F-D	
R162	RL 0,35W 2,21KOHM+-1%TK50 RESISTOR	RL 082.2477	DRALORIC	SMA 0207/2,21K-F-C	
R163	RL 0,35W 2,74KOHM+-1%TK50 RESISTOR	RL 083.0926	DRALORIC	SMA0207/2,74K-F-D	
R164	RL 0,35W 39,2 OHM+-1%TK50 RESISTOR	RL 082.9420	DRALORIC	SMA0207/39,20HM-F-D	
R166	RL 0,35W 121 OHM+-1%TK50 RESISTOR	RL 082.9859	DRALORIC	SMA0207/1210HM-F-D	
R167	RL 0,35W 150 OHM+-1%TK50 RESISTOR	RL 082.9942	DRALORIC	SMA0207/1500HM-F-D	

Kennz. Comp.No.	Benennung Designation	Sachnummer Stock No.	Hersteller Manufacturer	Bezeichnung Designation	enthalten in contained in
R168	RL 0,35W22,10 OHM+-1%TK50 RESISTOR	RL 082.9188	DRALORIC	SMA0207/22,10HM-F-D	
R169	RL 0,35W 332 OHM+-1%TK50 RESISTOR	RL 083.0255	DRALORIC	SMA0207/3320HM-F-D	
R170	RL 0,35W18,20 OHM+-1%TK50 RESISTOR	RL 082.9107	DRALORIC	SMA0207/18,20HM-F-D	
R171	RL 0,35W 332 OHM+-1%TK50 RESISTOR	RL 083.0255	DRALORIC	SMA0207/3320HM-F-D	
R173	RL 0,35W3,32 OHM+-1%TK50 METALFILMRESISTOR	RL 099.7983	RESISTA	MK2 3,32 OHM 1% TK50	
R180	RL 0,35W3,32 OHM+-1%TK50 METALFILMRESISTOR	RL 099.7983	RESISTA	MK2 3,32 OHM 1% TK50	
R181	RL 0,35W 274 OHM+-1%TK50 RESISTOR	RL 083.0178	DRALORIC	SMA0207/2740HM-F-D	
R182	RL 0,35W 2,21KOHM+-1%TK50 RESISTOR	RL 082.2477	DRALORIC	SMA 0207/2,21K-F-C	
R183	RL 0,35W 2,74KOHM+-1%TK50 RESISTOR	RL 083.0926	DRALORIC	SMA0207/2,74K-F-D	
R184	RL 0,35W22,10 OHM+-1%TK50 RESISTOR	RL 082.9188	DRALORIC	SMA0207/22,10HM-F-D	
R186	RL 0,35W 121 OHM+-1%TK50 RESISTOR	RL 082.9859	DRALORIC	SMA0207/1210HM-F-D	
R187	RL 0,35W 150 OHM+-1%TK50 RESISTOR	RL 082.9942	DRALORIC	SMA0207/1500HM-F-D	
R188	RL 0,35W22,10 OHM+-1%TK50 RESISTOR	RL 082.9188	DRALORIC	SMA0207/22,10HM-F-D	
R189	RL 0,35W 121 OHM+-1%TK50 RESISTOR	RL 082.9859	DRALORIC	SMA0207/1210HM-F-D	
R190	RL 0,35W 47,5 OHM+-1%TK50 RESISTOR	RL 082.9507	DRALORIC	SMA0207/47,50HM-F-D	
R191	RL 0,35W 121 OHM+-1%TK50 RESISTOR	RL 082.9859	DRALORIC	SMA0207/1210HM-F-D	
R192	RL 0,35W2,21 OHM+-1%TK50 METALFILMRESISTOR	RL 099.7948	RESISTA	MK2 2,21 OHM 1% TK50	
R200	RL 0,35W3,32 OHM+-1%TK50 METALFILMRESISTOR	RL 099.7983	RESISTA	MK2 3,32 OHM 1% TK50	
R201	RL 0,35W 274 OHM+-1%TK50 RESISTOR	RL 083.0178	DRALORIC	SMA0207/2740HM-F-D	
R202	RL 0,35W 2,21KOHM+-1%TK50 RESISTOR	RL 082.2477	DRALORIC	SMA 0207/2,21K-F-C	
R203	RL 0,35W 2,74KOHM+-1%TK50 RESISTOR	RL 083.0926	DRALORIC	SMA0207/2,74K-F-D	
R204	RL 0,35W22,10 OHM+-1%TK50 RESISTOR	RL 082.9188	DRALORIC	SMA0207/22,10HM-F-D	
R206	RL 0,35W 150 OHM+-1%TK50 RESISTOR	RL 082.9942	DRALORIC	SMA0207/1500HM-F-D	
R207	RL 0,35W 150 OHM+-1%TK50 RESISTOR	RL 082.9942	DRALORIC	SMA0207/1500HM-F-D	
R208	RL 0,35W22,10 OHM+-1%TK50 RESISTOR	RL 082.9188	DRALORIC	SMA0207/22,10HM-F-D	
R209	RL 0,35W 121 OHM+-1%TK50 RESISTOR	RL 082.9859	DRALORIC	SMA0207/1210HM-F-D	
R210	RL 0,35W 47,5 OHM+-1%TK50 RESISTOR	RL 082.9507	DRALORIC	SMA0207/47,50HM-F-D	
R211	RL 0,35W 121 OHM+-1%TK50 RESISTOR	RL 082.9859	DRALORIC	SMA0207/1210HM-F-D	
R212	RL 0,35W2,21 OHM+-1%TK50 METALFILMRESISTOR	RL 099.7948	RESISTA	MK2 2,21 OHM 1% TK50	
R220	RL 0,35W3,32 OHM+-1%TK50 METALFILMRESISTOR	RL 099.7983	RESISTA	MK2 3,32 OHM 1% TK50	
R221	RL 0,35W 274 OHM+-1%TK50 RESISTOR	RL 083.0178	DRALORIC	SMA0207/2740HM-F-D	
R222	RL 0,35W 2,21KOHM+-1%TK50 RESISTOR	RL 082.2477	DRALORIC	SMA 0207/2,21K-F-C	
R223	RL 0,35W 2,74KOHM+-1%TK50 RESISTOR	RL 083.0926	DRALORIC	SMA0207/2,74K-F-D	
R227	RL 0,35W 150 OHM+-1%TK50 RESISTOR	RL 082.9942	DRALORIC	SMA0207/1500HM-F-D	
R228	RL 0,35W22,10 OHM+-1%TK50 RESISTOR	RL 082.9188	DRALORIC	SMA0207/22,10HM-F-D	
R229	RL 0,35W 332 OHM+-1%TK50 RESISTOR	RL 083.0255	DRALORIC	SMA0207/3320HM-F-D	
R230	RL 0,35W18,20 OHM+-1%TK50 RESISTOR	RL 082.9107	DRALORIC	SMA0207/18,20HM-F-D	
R231	RL 0,35W 332 OHM+-1%TK50 RESISTOR	RL 083.0255	DRALORIC	SMA0207/3320HM-F-D	
R232	RL 0,35W2,21 OHM+-1%TK50 METALFILMRESISTOR	RL 099.7948	RESISTA	MK2 2,21 OHM 1% TK50	

uns alle Rechte vor

Kennz. Comp.No.	Benennung Designation	Sachnummer Stock No.	Hersteller Manufacturer	Bezeichnung Designation	enthalten in contained in
R241	RL 0,35W2,21 OHM+-1%TK50 METALFILMRESISTOR	RL 099.7948	RESISTA	MK2 2,21 OHM 1% TK50	
R242	RL 0,35W2,21 OHM+-1%TK50 METALFILMRESISTOR	RL 099.7948	RESISTA	MK2 2,21 OHM 1% TK50	
R243	RL 0,35W 22,1KOHM+-1%TK50 RESISTOR	RL 083.1545	DRALORIC	SMA/207/22,1K-F-C	
R244	RL 0,35W 3,32KOHM+-1%TK50 RESISTOR	RL 083.0990	DRALORIC	SMA0207/3,32K-F-D	
R245	RL 0,35W2,21 OHM+-1%TK50 METALFILMRESISTOR	RL 099.7948	RESISTA	MK2 2,21 OHM 1% TK50	
R246	RL 0,35W 56,2 OHM+-1%TK50 RESISTOR	RL 082.9571	DRALORIC	SMA0207/56,2OHM-F-D	
R247	RL 0,35W 10,0 OHM+-1%TK50 RESISTOR	RL 082.8852	DRALORIC	SMA0207/10OHM-F-D	
R248	RL 0,35W 4,75KOHM+-1%TK50 RESISTOR	RL 083.1097	DRALORIC	SMA0207/4,75K-F-D	
R249	RL 0,35W2,21 OHM+-1%TK50 METALFILMRESISTOR	RL 099.7948	RESISTA	MK2 2,21 OHM 1% TK50	
R250	RL 0,35W2,21 OHM+-1%TK50 METALFILMRESISTOR	RL 099.7948	RESISTA	MK2 2,21 OHM 1% TK50	
R280	RL 0,35W3,32 OHM+-1%TK50 METALFILMRESISTOR	RL 099.7983	RESISTA	MK2 3,32 OHM 1% TK50	
R281	RL 0,35W 274 OHM+-1%TK50 RESISTOR	RL 083.0178	DRALORIC	SMA0207/274OHM-F-D	
R282	RL 0,35W 2,21KOHM+-1%TK50 RESISTOR	RL 082.2477	DRALORIC	SMA 0207/2,21K-F-C	
R283	RL 0,35W 2,74KOHM+-1%TK50 RESISTOR	RL 083.0926	DRALORIC	SMA0207/2,74K-F-D	
R287	RL 0,35W 150 OHM+-1%TK50 RESISTOR	RL 082.9942	DRALORIC	SMA0207/150OHM-F-D	
R288	RL 0,35W22,10 OHM+-1%TK50 RESISTOR	RL 082.9188	DRALORIC	SMA0207/22,1OHM-F-D	
R289	RL 0,35W 332 OHM+-1%TK50 RESISTOR	RL 083.0255	DRALORIC	SMA0207/332OHM-F-D	
R290	RL 0,35W18,20 OHM+-1%TK50 RESISTOR	RL 082.9107	DRALORIC	SMA0207/18,2OHM-F-D	
R291	RL 0,35W 332 OHM+-1%TK50 RESISTOR	RL 083.0255	DRALORIC	SMA0207/332OHM-F-D	
R292	RL 0,35W2,21 OHM+-1%TK50 METALFILMRESISTOR	RL 099.7948	RESISTA	MK2 2,21 OHM 1% TK50	
V1	AK BFW16A N 40V 150MA TRANSISTOR	AK 010.4644	VALVO	BFW16A	
V21	AK BFW16A N 40V 150MA TRANSISTOR NUR VAR/ONLY MOD: 03 MODEL 03 ONLY	AK 010.4644	VALVO	BFW16A	
V41	AK BFW16A N 40V 150MA TRANSISTOR NUR VAR/ONLY MOD: 03 MODEL 03 ONLY	AK 010.4644	VALVO	BFW16A	
V61	AE 1N827 6,2V REFDI REFERENCE DIODE	AE 418.0029	CDI	1N827	
V101	AE BA244 BER.SCH.DI.UHF DIODE	AE 439.6310	INTERMETAL	BA244	
V102	AE BA244 BER.SCH.DI.UHF DIODE	AE 439.6310	INTERMETAL	BA244	
V103	AE BA244 BER.SCH.DI.UHF DIODE	AE 439.6310	INTERMETAL	BA244	
V111	AK BCY59IX N 45V 200MA TRANSISTOR	AK 010.5163	VALVO	BCY59IX	
V112	AK BFR96 N 15V 75MA TRANSISTOR	AK 093.2738	VALVO	BFR96	
V113	AK BFR96 N 15V 75MA TRANSISTOR	AK 093.2738	VALVO	BFR96	
V161	AK BFW16A N 40V 150MA TRANSISTOR	AK 010.4644	VALVO	BFW16A	
V191	AK BFW16A N 40V 150MA TRANSISTOR	AK 010.4644	VALVO	BFW16A	
V201	AK BFW16A N 40V 150MA TRANSISTOR	AK 010.4644	VALVO	BFW16A	
V221	AK BFW16A N 40V 150MA TRANSISTOR	AK 010.4644	VALVO	BFW16A	
V241	AD 1N4448 75V OA15 UDI DIODE	AD 012.0700	TEXAS INST	1N4448 GEGURTET	
V242	AK BCY79IX P 45V 200MA TRANSISTOR	AK 010.3777	VALVO	BCY79IX	

Kennz. Comp.No.	Benennung Designation	Sachnummer Stock No.	Hersteller Manufacturer	Bezeichnung Designation	enthalten in contained in
V281	AK BFW16A N 40V 150MA TRANSISTOR	AK 010.4644	VALVO	BFW16A	
X1	FJ EINBAUWINKELST. SMC ANGLE CONNECTOR	FJ 249.9684	RADIALL	R 112 669	
X3	FJ EINBAUWINKELST. SMC ANGLE CONNECTOR	FJ 249.9684	RADIALL	R 112 669	
X4	FJ EINBAUWINKELST. SMC ANGLE CONNECTOR	FJ 249.9684	RADIALL	R 112 669	
X5	FJ EINBAUWINKELST. SMC ANGLE CONNECTOR	FJ 249.9684	RADIALL	R 112 669	
X6	FJ EINBAUWINKELST. SMC ANGLE CONNECTOR NUR VAR/ONLY MOD: 03 MODEL 03 ONLY	FJ 249.9684	RADIALL	R 112 669	
X7	FJ EINBAUWINKELST. SMC ANGLE CONNECTOR	FJ 249.9684	RADIALL	R 112 669	
X8	FJ EINBAUWINKELST. SMC ANGLE CONNECTOR	FJ 249.9684	RADIALL	R 112 669	
X15	FP INDIREKT.STECKERL.36P. PIN CONNECTOR 4-POLIG/4 PINS	FP 242.3600	BINDER	742-5-11-0178-00-36	
X16	FP KURZSCHLUSSBUCHSE SHORTING PLUG	FP 491.7042	PK	452-70302	
X17	FP INDIREKT.STECKERL.36P. PIN CONNECTOR 4-POLIG/4 PINS	FP 242.3600	BINDER	742-5-11-0178-00-36	
X18	FP KURZSCHLUSSBUCHSE SHORTING PLUG	FP 491.7042	PK	452-70302	
X21	FP STECKERLEISTE 64POL. MALE MULTIPOINT CONNECTOR	FP 273.0490	PANDUIT	100-964-033/999	
X22	FP KURZSCHLUSSBUCHSE SHORTING PLUG NUR VAR/ONLY MOD: 03	FP 491.7042	PK	452-70302	
X23	FP INDIREKT.STECKERL.36P. PIN CONNECTOR NUR VAR/ONLY MOD: 03 4-POLIG/4 PINS	FP 242.3600	BINDER	742-5-11-0178-00-36	
X24	FP KURZSCHLUSSBUCHSE SHORTING PLUG NUR VAR/ONLY MOD: 03	FP 491.7042	PK	452-70302	
X41	BEMERKUNG / PLEASE NOTE TEST PIN				
X52	BEMERKUNG / PLEASE NOTE TEST PIN				
X111	FP INDIREKT.STECKERL.36P. PIN CONNECTOR 4-POLIG/4 PINS	FP 242.3600	BINDER	742-5-11-0178-00-36	
X112	FP KURZSCHLUSSBUCHSE SHORTING PLUG	FP 491.7042	PK	452-70302	
X115	BEMERKUNG / PLEASE NOTE TEST PIN				
X116	BEMERKUNG / PLEASE NOTE TEST PIN				
X117	BEMERKUNG / PLEASE NOTE TEST PIN				
X131	FP INDIREKT.STECKERL.36P. PIN CONNECTOR 4-POLIG/4 PINS	FP 242.3600	BINDER	742-5-11-0178-00-36	
X132	FP KURZSCHLUSSBUCHSE SHORTING PLUG	FP 491.7042	PK	452-70302	
X133	FP INDIREKT.STECKERL.36P. PIN CONNECTOR 4-POLIG/4 PINS	FP 242.3600	BINDER	742-5-11-0178-00-36	
X134	FP KURZSCHLUSSBUCHSE SHORTING PLUG	FP 491.7042	PK	452-70302	
X135	FP INDIREKT.STECKERL.36P. PIN CONNECTOR 4-POLIG/4 PINS	FP 242.3600	BINDER	742-5-11-0178-00-36	
X136	FP KURZSCHLUSSBUCHSE SHORTING PLUG	FP 491.7042	PK	452-70302	
X161	BEMERKUNG / PLEASE NOTE TEST PIN				
X181	BEMERKUNG / PLEASE NOTE TEST PIN				
X201	BEMERKUNG / PLEASE NOTE TEST PIN				

s alle Rechte vor

Kennz. Comp.No.	Benennung Designation	Sachnummer Stock No.	Hersteller Manufacturer	Bezeichnung Designation	enthalten in contained in
X210	FP INDIREKT.STECKERL.36P. PIN CONNECTOR NUR VAR/ONLY MOD: 03 4-POLIG/4 PINS	FP 242.3600	BINDER	742-5-11-0178-00-36	
X221	BEMERKUNG / PLEASE NOTE TEST PIN				
X242	BEMERKUNG / PLEASE NOTE TEST PIN				
X281	BEMERKUNG / PLEASE NOTE TEST PIN				
					- ENDE -

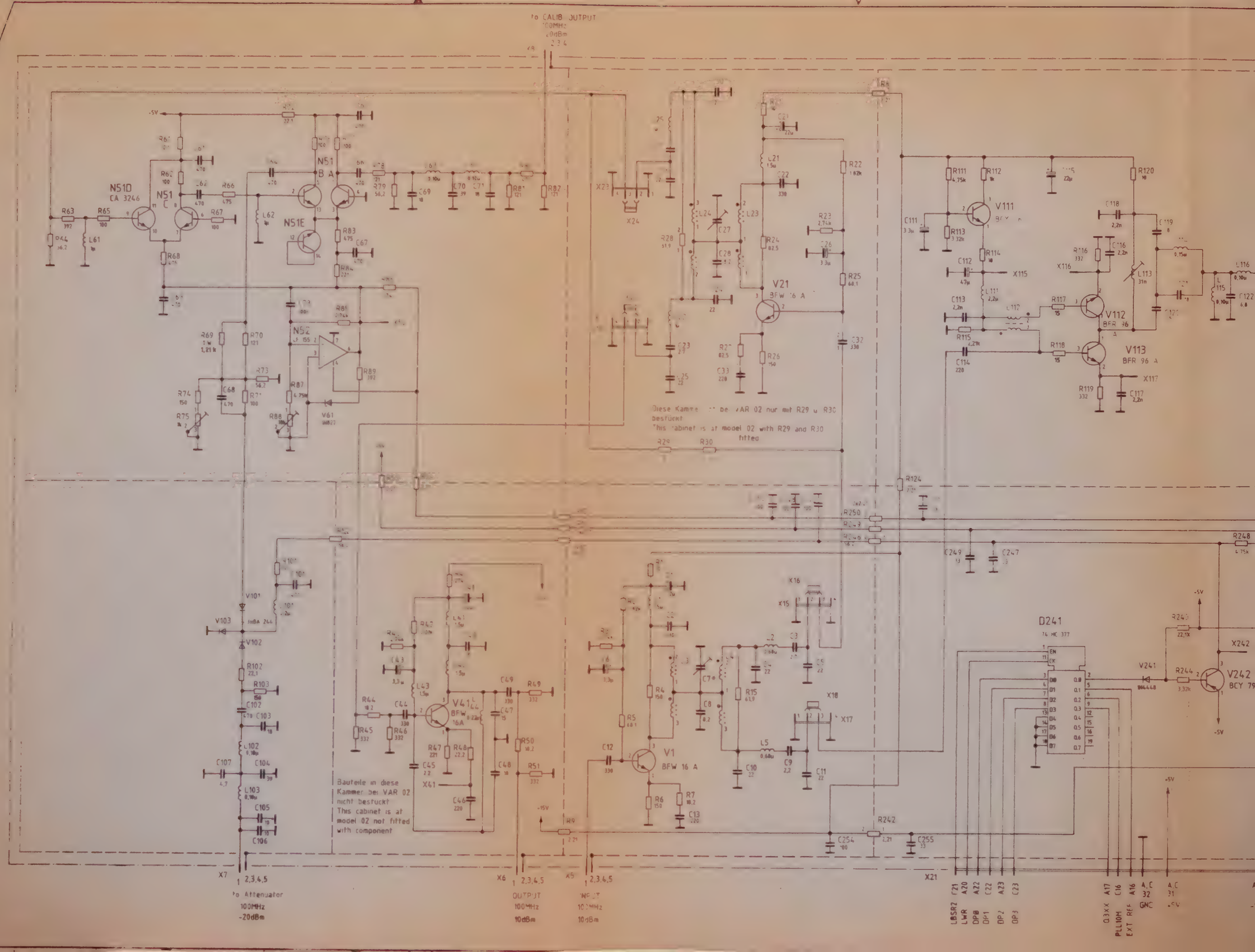

to CALIB OUTPUT
100MHz
20dBm
N51D
CA 3246
N51
N51E
N52
V21
BFW 16 A
V111
V112
BFR 96
V113
BFR 96 A
Diese Kammer ist bei VAR 02 nur mit R29 u. R30 bestückt
This cabinet is at model 02 with R29 and R30 fitted
V41
BFW 16A
V1
BFW 16 A
D241
74 HC 377
V242
BCY 79
Bauteile in diese Kammer bei VAR 02 nicht bestückt
This cabinet is at model 02 not fitted with component
X7
to Attenuator
100MHz
-20dBm
X6
OUTPUT
100MHz
10dBm
X5
INPUT
100MHz
10dBm
X21
LBSR2
LWR
DP0
DP1
DP2
DP3
Q3XX
PLL10M
EXT REF
A,C 32
GND
A,C 31
+5V

+10dBm ±2dB
200MHz
X3 1 2,3,4,5

X112 200MHz +10dBm ±2dB
X111
C112 *2
R122 7,6
R121 187
R123 187
C124 *2
C131 *7
C132 *
L 133
C134 5,6
L134 260n
C133 33
C135 33
X131
X132
R132 121
C136 33
C137 5,6
L135 260n
C138 33
X133
X134
C139 15
C140 *
C149 *
X135
X136
C144 5,6
L137 260n
C143 68
C145 33
R131 22,1
L131 ge
L132 ge

+15V
R161 274
C161 22µ
L161 1µ
C162 1n
L162 1µ
R162 2,21k
R163 2,74k
C163 3,3µ
L163 1µ
R164 39,2
C164 330
R173 3,32
V161 BFW 16A
C169 330
R170 10,2
C167 6,8
R169 332
R171 332
R166 121
C165 2,2
R167 150
R168 22,1
L164 0,10µ
C168 6,8
X161
C166 82

+15V
R201 274
C201 22µ
L201 1µ
C202 1n
L202 1µ
R202 2,21k
R203 2,74k
C203 3,3µ
L203 1µ
R204 22,1
C204 330
R200 3,32
V201 BFW 16 A
C209 330
R210 47,5
R209 121
R 211 121
C207 8,2
C205 1,5
R207 150
R 208 22,1
L 204 0,10µ
C208 8,2
R206 150
X201
C206 82

+15V
R281 274
C281 22µ
L281 1µ
C282 1n
L282 1µ
R283 2,74k
R282 2,21k
C283 3,3µ
L283 1µ
C284 330
R280 1,32
V281 BFW 16 A
C289 330
R290 10,2
R289 332
R291 332
C287 8,2
L 284 0,10µ
C288 8,2
C285 1,5
R287 150
R288 22,1
X281
C286 82

X1 (X2) 1 2,3 4,5 +10dBm ±2dB 200MHz

+15V
R212 2,21
R292 2,21 +15V
R232 2,21
R241 2,21
C252 33
C253 100
R192 2,21

+15V
R181 274
C181 22µ
L181 1µ
C182 1n
L182 1µ
R182 2,21k
R183 2,74k
C183 3,3µ
L183 1µ
R184 22,1
C184 330
R180 3,32
V191 BFW 16 A
C189 330
R190 47,5
C187 6,8
R189 121
R191 121
R186 121
C185 1,5
R187 150
R 188 22,1
L184 0,10µ
C188 6,8
X181
C186 82

+15V
R221 274
C221 22µ
L221 1µ
C222 1n
L222 1µ
R222 2,21k
R223 2,74k
C223 3,3µ
L223 1µ
C224 330
R220 3,32
V221 BFW 16 A
C229 330
R230 10,2
R229 332
R231 332
C227 8,2
R227 150
R 228 22,1
L224 0,10µ
C225 1,5
X221
C226 82
C228 8,2

+5V
D241 20 11 1 10
Draufsicht TOP VIEW

N51 14 8 1 7
Draufsicht TOP VIEW

N52 8 5 1 4
Draufsicht TOP VIEW

V1,V21,V41,
V111,V161,V191
V201,V221,V281
V242

V112,V113, Makierung Marking
Draufsicht TOP VIEW

C241 22µ
L241
C242 47µ
C243 22µ
C247
A,C 1
A,C 7 +15V

X4 1 2,3,4,5 200 MHz 10dBm ±2dB

0 1 2 3 ZENTIMETER

* nicht bestückt
* not fitted with this component

VARIANTENERKLÄRUNG /MODEL
VAR 02 = GRUNDAUSFÜHRUNG
BASIC-MODEL

B		12.85	BG	E	37 066 (32)	01.90	BG	WGF	Tag	Name	Benennung	REFERENCE 2			
C	32 745 (29)	04.86	BG					Bearb.	07.85	BG			Zeichn.-Nr.	807. 3019 S	Blatt-Nr. 1
D	37 063 (21)	06.88	BG					Gepr.							
Änd.	Änderungsbenennung	Datum	Name	Änd.	Änderungsbenennung	Datum	Name	Norm.							

ROHDE & SCHWARZ

Ansicht und Leitungsfuhrung Bauteilseite
View of tracks on component side

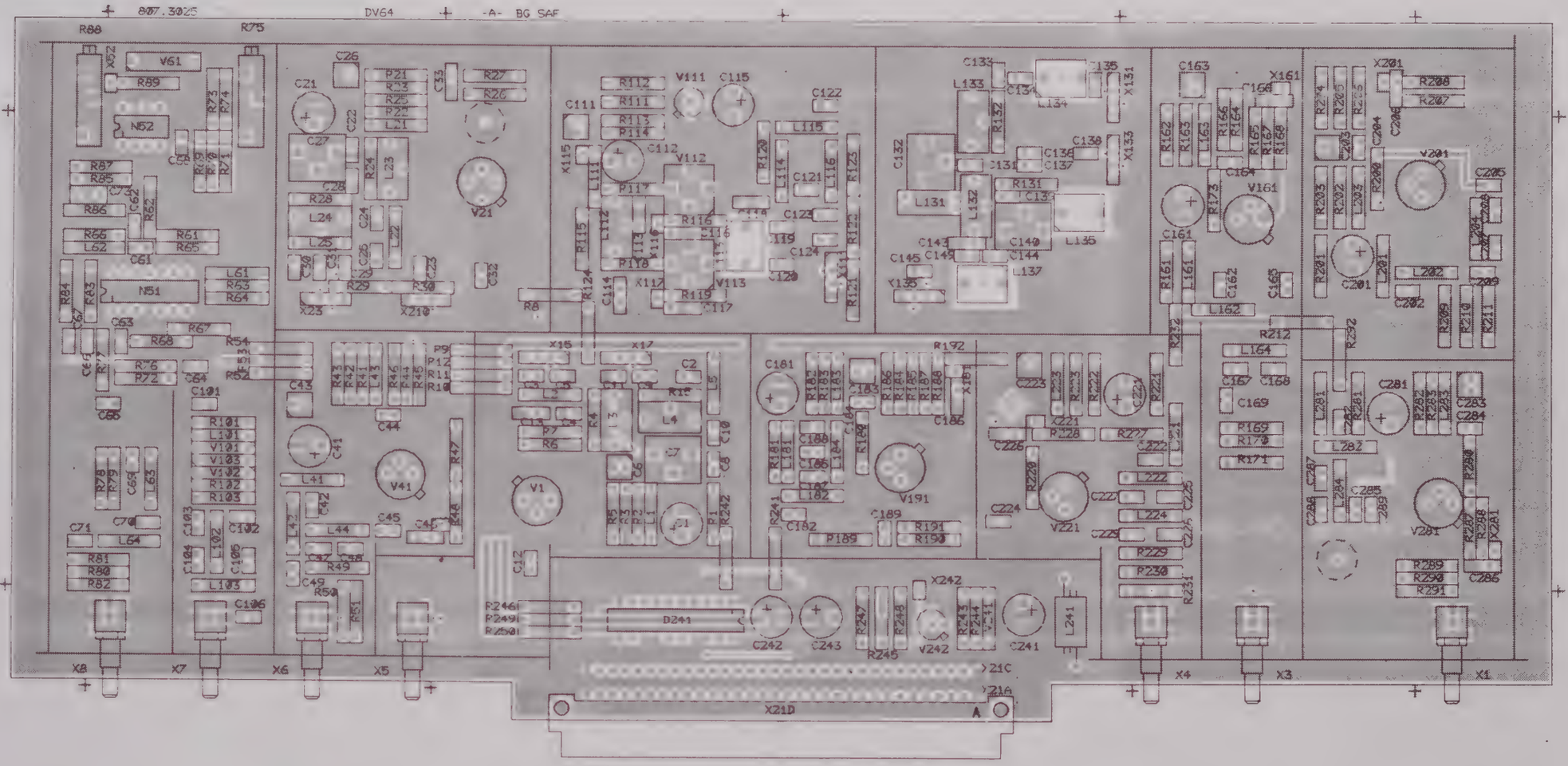

Für diese Unterlage behalten wir uns alle Rechte vor

ACHTUNG EGB!
Elektrostatisch gefährdete Bauelemente erfordern eine besondere Handhabung
ATTENTION ESD!
Electrostatic sensitive devices require a special handling

(herzu HVC 250)

A	06.85 BG	Maße ohne Toleranzangabe		Maßstab 1 : 1	
				Halbzeug, Werkstoff	
		1KGF	Tag Name	Benennung	
		Bearb	06.85 BG	Reference 2	Z
		Gepr			
		Norm			
		ROHDE & SCHWARZ		Zeichn.-Nr 807.3019.01	Blatt-Nr 2
Ana Zust	Anderungs-Mitteilung	Tag	Name	zu Gerat FSA	reg. V 806.4011 V erste Z. 806.4011

Ansicht und Leitungsführung Lötseite
View of tracks on solder side

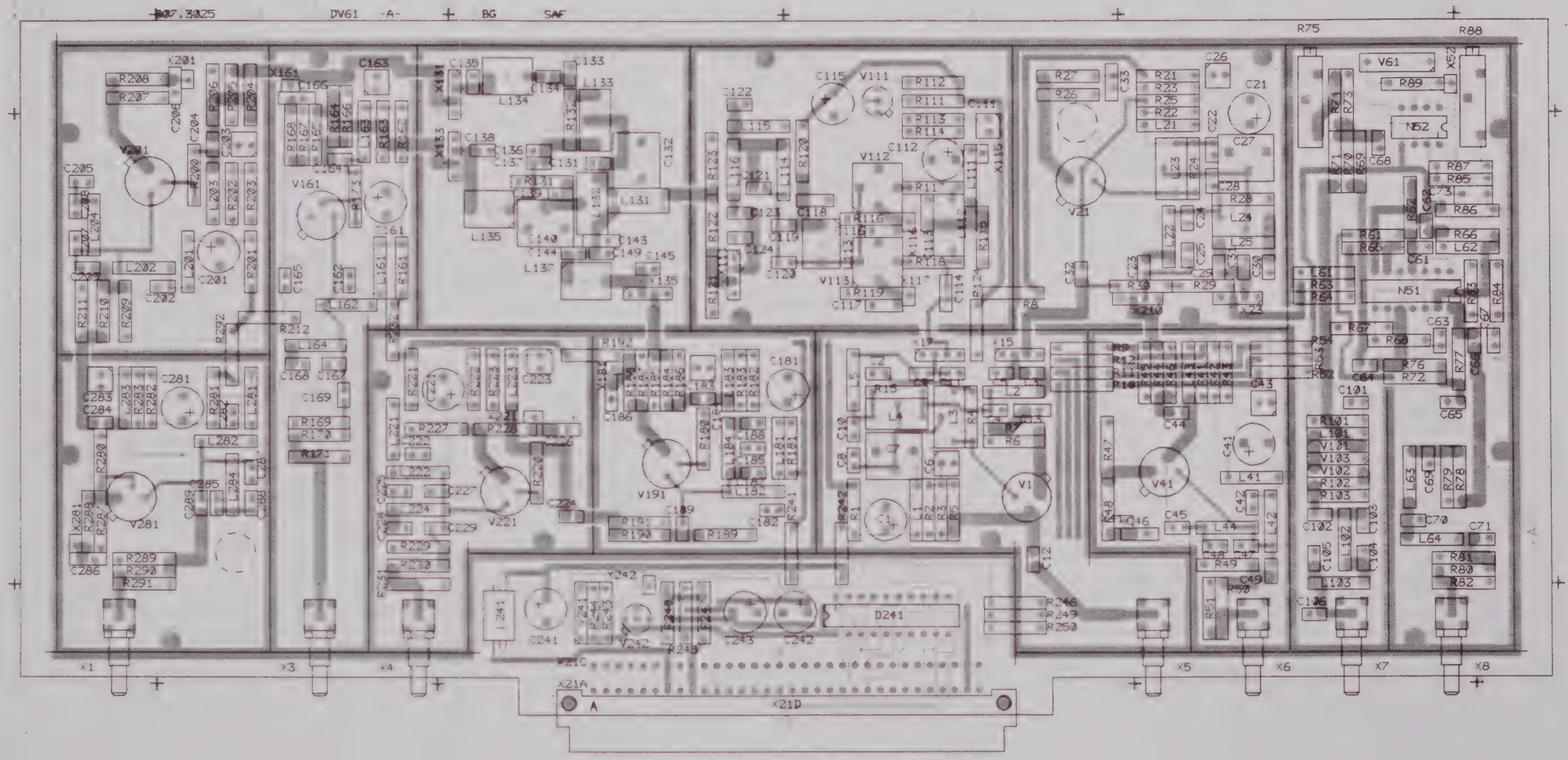

Für diese Unterlage behalten wir alle Rechte vor

ACHTUNG EGB!
Elektrostatisch gefährdete Bauelemente erfordern eine besondere Handhabung

ATTENTION ESD!
Electrostatic sensitive devices require a special handling

(hierzu HVC 250)

A		06.85	BG	Maße ohne Toleranzangabe	Maßstab 1 : 1
					Halbzeug, Werkstoff
				1KGF / Tag / Name	Benennung: Reference 2 — Z
				Bearb 06.85 BG	
				Gepr	
				Norm	
And	Anderungs-Mitteilung	Tag	Name	ROHDE & SCHWARZ	Zeichn.-Nr. 807.3019.01 — Blatt-Nr. 3
Zust				zu Gerat FSA	reg i V 806.4011 V — erste Z 806.4011 — v Bl

ROHDE&SCHWARZ

SERVICE DOCUMENTATION

Reference 1

848.5000.02

Contents

		Page
6	**Service Instructions Reference 1**	6.1
6.1	**Function Description**	6.1
6.1.1	Heating and Control of the OCXO	6.1
6.1.2	Switching Stage: Internal / External Reference	6.1
6.1.3	10-MHz PLL Oscillator	6.1
6.1.4	Divider Stage	6.2
6.1.5	Isolating Stages	6.2
6.1.6	10-MHz Doubler	6.2
6.1.7	Isolating Stage for 20 MHz	6.2
6.1.8	20-MHz Quintupler	6.2
6.1.9	100-MHz PLL Oscillator	6.2
6.2	**Testing and Adjustment**	6.5
6.2.1	Preliminary Remarks	6.5
6.2.2	Checking the Supply Voltage (+ 14 V)	6.5
6.2.3	Checking the Temperature Monitoring of the OCXO	6.5
6.2.4	Testing the 10-MHz PLL Lock-in	6.5
6.2.5	Testing the 100-MHz PLL Lock-in	6.5
6.2.6	Adjusting the 10-MHz Oscillator	6.5
6.2.7	Adjusting the 100-MHz Oscillator	6.6
6.2.8	Start-up of 10 MHz	6.6
6.2.9	Adjusting the 10-fold Frequency	6.6
6.2.10	Start-up of 100 MHz	6.6
6.2.11	Checking the Levels of the Individual Outputs	6.6
6.2.12	Adjusting the Internal Reference Frequency	6.6
6.3	**Troubleshooting**	6.7
6.3.1	General Notes	6.7
6.3.2	Internal and External Reference Frequencies	6.7
6.3.3	Checking the Oscillators	6.7

Parts lists
Circuit diagrams
Component location plans

6 Service Instructions Reference 1

(See circuit diagram 848.5000 S)

6.1 Function Description

This module contains a temperature-controlled crystal oscillator from which frequencies of 20 MHz and 100 MHz are derived via frequency multipliers, PLL oscillators and isolating stages.

A switched bidirectional stage is also present for selection of the internal or external reference of 10 MHz.

6.1.1 Heating and Control of the OCXO

+ 12 V is applied to the heating supply A171 via W511/13. This voltage is supplied in standby mode so that the instrument is immediately ready for use when switched on.

The OCXO is heated further when switched to external reference and its internal electronics with an NTC resistor in a bridge circuit controls the temperature.

Half the operating voltage can be measured at A171/4 if the operating temperature has been reached. This monitoring is handled by the window comparator N152 which outputs the error message OVENC (OVEN COLD) at W511/4 if the temperature has not been reached.

The oscillator is also powered by N151 and V160 (also in standby mode) in order to guarantee defined aging and drift values of the crystal clock, i.e. with the instrument switched on, the crystal oscillator is only switched off in mode "External reference", the heating continues in standby mode provided the power is connected.

6.1.2 Switching Stage: Internal / External Reference

When the internal reference is used (OCXO, A171), the switching diodes V177, V178 conduct by means of N151/A and apply the 10-MHz signal from A171/1 to the isolating stage V180

The internal 10-MHz signal comes from the divider stage V252 at V171 and is applied to socket X32 via the diode V172 switched on by N151/A. N151/B with the switching diodes V173 to V175 blocks the path to V180.

In the case of an external reference, the oscillator in A171 and the isolating stage V171 are switched off by control of W511/9 (EXTREF).

The previously mentioned diode paths are now blocked and V174 conducts the external signal to V180

6.1.3 10-MHz PLL Oscillator

The 10-MHz PLL oscillator is used to improve the sideband noise. Its absolute frequency accuracy and the frequency drift are determined by the reference oscillator A171 via the PLL.

V231 implements a Butler crystal oscillator with buffer stage V234 whose frequency is varied using tuning diodes.

Both the oscillator signal and the reference frequency are applied to the phase detector U201 via corresponding isolating amplifiers. The PLL amplifier N201 locks the oscillator in-phase to the reference frequency.

N202/A monitors whether the VCXO control voltage is in the valid range. N202/A is inverted if this range is left and initiates the lock-in procedure.

Each reversal in the search direction triggers the monoflop N202/B which operates on positive and negative edges. The error message LE10M (LOW ERROR 10 MHz) is output for 450 µs at W511/15 at each changeover point.

6.1.4 Divider Stage

The divider stage with V252 has an extremely low output impedance between C253 and C254. The oscillator signal is routed from here together with the base voltage to four isolating stages, reduced in level and output at W33 with + 3 dBm and at X34 with -20 dBm.

Noise signals applied in the reverse direction by the output are divided down by the output impedance of stage V252. This results in high decoupling of noise signals between the various outputs.

6.1.5 Isolating Stages

The isolating stages V253, V254, V255 and V171 are all of the same design. The principle is described using the stage with V253. The base voltage of approx. 5.4 V is applied to the base together with the RF signal. The collector current is applied via the inductor L254. The transforming collector resonant circuit consists of L255, C262, C263 and C264. The ground point between C263 and C264 produces a signal at the junction C264/C265 which is inverted in phase compared to the collector. C258 can therefore compensate the collector emitter capacitance, and the feedback drops to a minimum. The output of each stage is followed by a 3-dB attenuator.

6.1.6 10-MHz Doubler

The driver stage V113 contains the resonant circuit comprising L112, L113, L131 and C116. Since the RF DC current between L112 and L113 is taken to ground, a signal of opposite phase is produced at V111 by doubling via the resonant circuit current.

The DC component produced by doubling with V111 and V112 is decoupled by R116 and L114.

The bandpass between C119 and C121 applies the 20-MHz signal to the driver stage V114 which is followed by a further bandpass between C128 and C101.

6.1.7 Isolating Stage for 20 MHz

The capacitive decoupling with C131 in the parallel circuit of the 20-MHz bandpass produces a capacitive divider with C133. The principle of the following isolating stage with V115 has already been described in Section 6.1.5.

6.1.8 20-MHz Quintupler

The signal from the 20-MHz bandpass at C101 is applied to diodes V101 and V102. The 100-MHz signal of the produced harmonics is filtered out by the bandpass between C103 and C105.

6.1.9 100-MHz PLL Oscillator

The 100-MHz PLL oscillator is synchronized with the 10-fold signal of the 10-MHz PLL oscillator. V21 implements a Butler crystal oscillator which is tuned with V22, V23.

The oscillator signal together with the 10-fold 10-MHz frequency is applied to the phase detector U71 via isolating amplifiers.

The PLL circuit is identical to the 10-MHz PLL circuit already described in Section 6.1.3.

The principle of the 100-MHz isolating stages V41, V42 and V1 has already been described in Section 6.1.5.

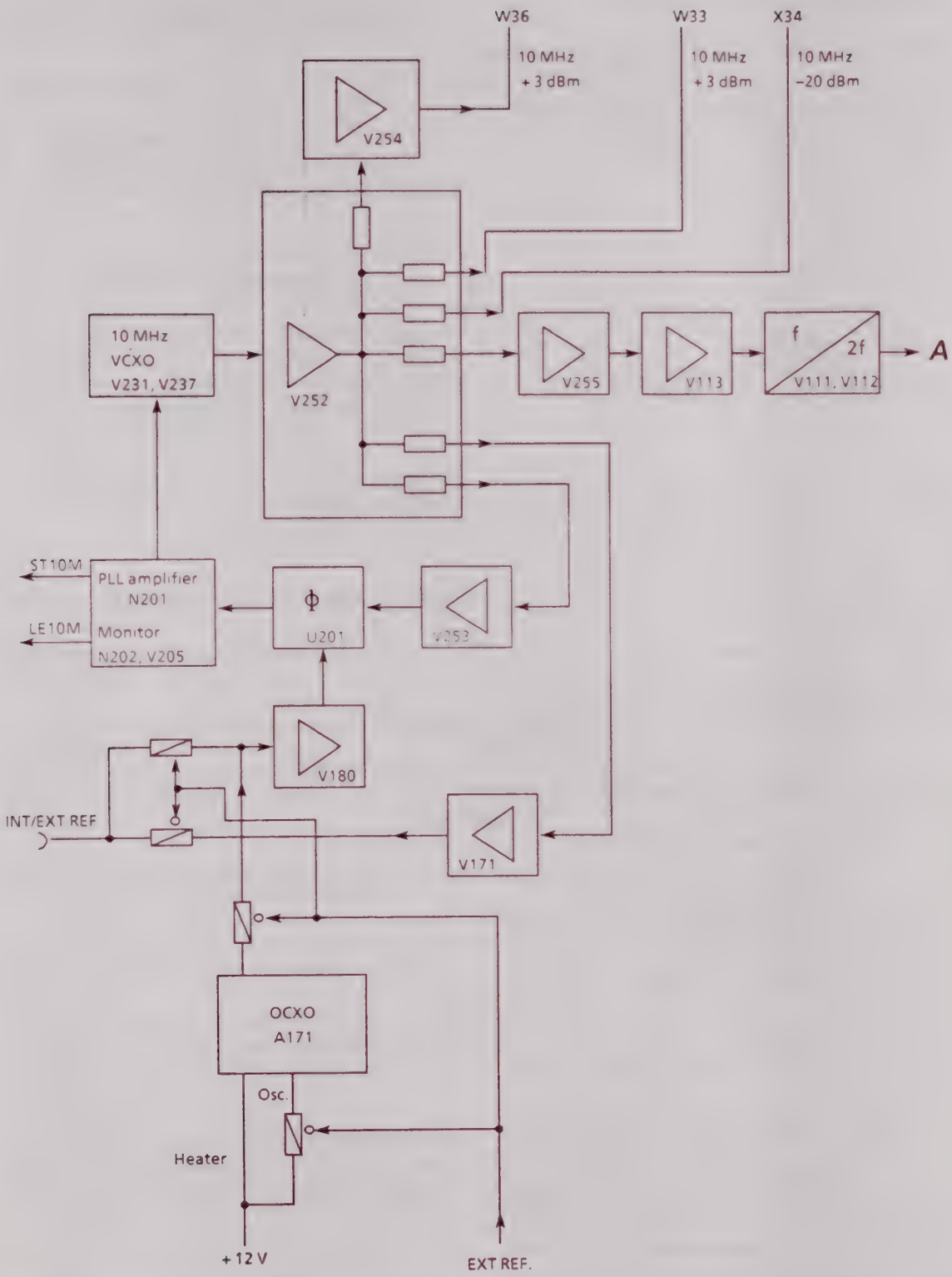

Fig. 6-1 Block diagram of reference 1 module (part 1)

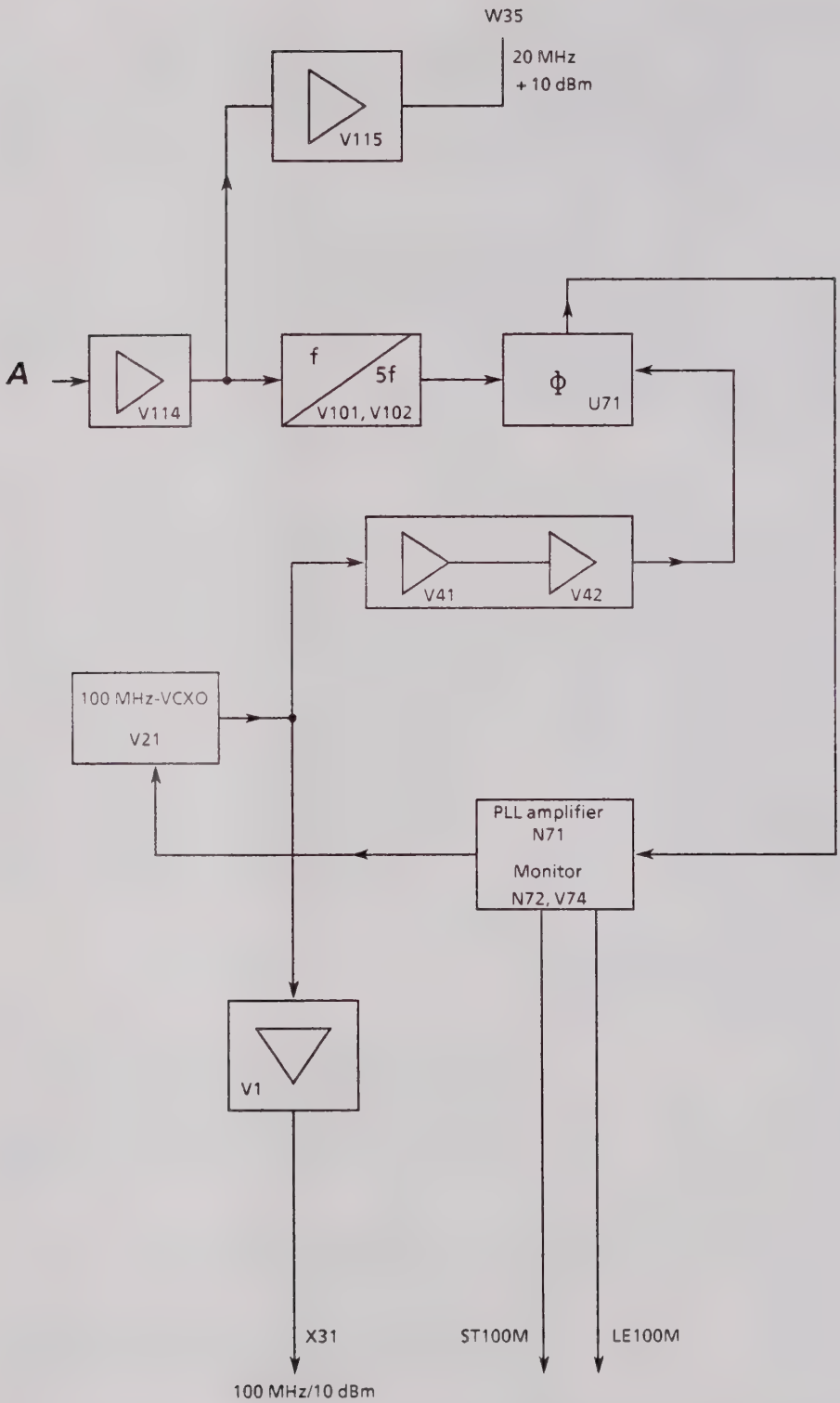

Fig. 6-1 Block diagram of reference 1 module (part 2)

6.2 Testing and Adjustment

Equipment required

- Frequency analyzer
- 10-MHz reference frequency, accuracy better than 10^{-8}
- Oscilloscope

6.2.1 Preliminary Remarks

Because of the oven-controlled oscillator, the current drain at + 12 V may be so high during the first few seconds (heating-up phase) that the current limitation responds until the value has dropped below approx. 1.5 A.

Current consumption: + 15 V/ approx. 470 mA
−15 V/ approx. −26 mA
+ 28 V/ approx. 15 mA

6.2.2. Checking the Supply Voltage (+ 14 V)

Check the DC Voltage at emitter V168:
rated voltage: + 14 V ± 0.1V

Check the noise voltage at emitter V168 using a psophometer:
(B = 30 Hz to 20 kHz, RMS detector, 1:1 probe)
rated value: ≤ 20 µV

6.2.3 Checking the Temperature Monitoring of the OCXO

During the heating-up phase, the signal OVENC (OVEN COLD) at W511/17 must be 5 V ± 10 %.

The OCXO reaches its operating temperature within a few minutes depending on the initial temperature. W511/17 then becomes Low, i.e. ≤ 0.8 V.

Note: W511/17 becomes High and signals a fault if the OCXO overheats because of an internal fault or an extremely high ambient temperature.

6.2.4 Testing the 10-MHz PLL Lock-in

Apply W511/12 (EXTREF) to High (TTL), i.e. switch over to EXT.REFERENZ.

Check the voltage at X21B (ST10M) according to the following diagram:

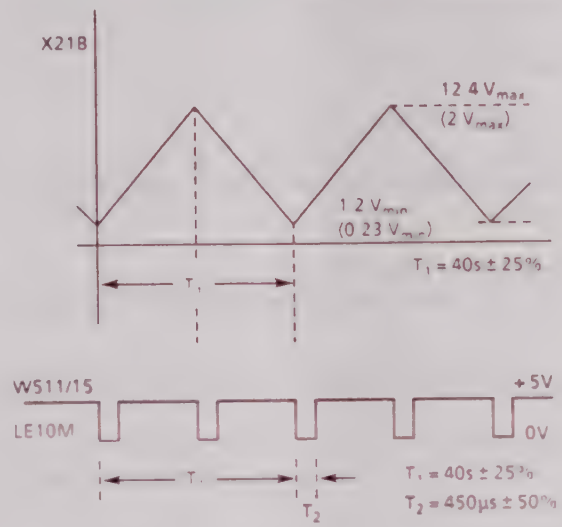

Values in brackets apply to output ST10M (W511/13)

A negative pulse (HCMOS) of approx. 450 µs must appear at W511/15 each time the direction of the triangular voltage is reversed.

6.2.5 Testing the 100-MHz PLL Lock-in

Insert jumper X230 between X23/3 and 4.

Check the circuit as described in 6.2.4.

Measure the triangular voltage at W511/14 (ST100M). T_1 = 3.5 s ± 25 %.

The 450 µs pulses are output at W511/16 (LE100M).

6.2.6 Adjusting the 10-MHz Oscillator

Apply tuning voltage of approx. 8 V to X21A (jumper X31 inserted).

Connect analyzer to test point X26.

Increase 10-MHz level to maximum using C237. Nominal level at X26: + 9 dBm ± 1 dB.

Vary tuning voltage from 1.2 V to 12.4 V, measure the level and frequency at X26:

Nominal frequency: $f_{min} \leq 10$ MHz − 100 Hz
$f_{max} \geq 10$ MHz + 100 Hz

Nominal level: 8 dBm ± 1.5 dB at X26A.

6.2.7 Adjusting the 100-MHz Oscillator

Insert jumper X400 at X40A/B.
Connect analyzer to cable X31.

Adjust 100-MHz oscillation using L31 (nominal value: 100 MHz ± 100 kHz).

Plug X400 into X40B/C.

Apply tuning voltage of 8 V.

Adjust oscillation level accurately to maximum using L31.

Vary tuning voltage from 1.2 V to 12.4 V.
Check the level and frequency (possibly non-harmonics).

Nominal level: + 10 dBm ± 1.5 dB at W31

Nominal frequency: $f_{min} \leq 100\ MHz - 1\ kHz$
$f_{max} \geq 100\ MHz + 1\ kHz$

6.2.8 Start-up of 10 MHz

- Plug X31 into X30/2 and 3.
- Plug X210 into X21/A and B.
- Check the level of the 10-MHz VCXO at X26A using the analyzer (+ 8 dBm ± 1.5 dB).
- Apply High (TTL level) to W511/12 (EXTREF).
- Apply 10-MHz sinewave signal (max. error 10^{-8}) with 3 to 10 V_{pp} to X32.

Test: the triangular voltage at W511/13 (ST10M) must become a static VCO voltage between + 1.2 and < + 12.4 V within approx. 70 s. At the same time, the 450 µs pulses are not present at W511/15 (T_2, see 6.2.4).

6.2.9 Adjusting the 10-fold Frequency

Level control of frequency doubler

With the 10-MHz oscillator switched on, which delivers a level of + 8 dBm ± 1.5 dB at X26A, a 20-MHz signal of -3 dBm ± 3 dB into 50 Ω must be present at X22A (check using analyzer).

Adjustment of frequency quintupler

Connect analyzer to X23/2;
level at 100 MHz: 0 dBm ± 2 dB.

Insert jumper X230 into X23/2 and 3.

6.2.10 Start-up of 100 MHz

- Insert X400 into X40/B and C.
- Check level of 100-MHz VCXO at X240/2 using analyzer.
  Nominal value: + 8 dBm ± 2 dB
- Disconnect analyzer from X24 and insert jumper between X24/2 and 3.

Test: the triangular voltage at W511/14 (ST100M) must become a static VCO voltage within 3 s. At the same time, the 450 µs pulses (LE100M) are not present at W511/16 (T_2, see 6.2.4).

6.2.11 Checking the Levels of the Individual Outputs

Once the previous adjustments have been made, all PLL circuits must be in synchronism with the external reference frequency.

Check the following levels using the spectrum analyzer.

Connector (X) or cable (W)	Frequency	Level	Tolerance
W33	10 MHz	+ 3 dBm	± 2 dB
X34	10 MHz	–20 dBm	± 3 dB
W36	10 MHz	+ 3 dBm	± 2 dB
W35	20 MHz	+ 10 dBm	± 2 dB
W31	100 MHz	+ 10 dBm	± 1.5 dB

6.2.12 Adjusting the Internal Reference Frequency

Caution: this adjustment may only be carried out with the instrument warmed up. Standby mode is sufficient during the warm-up phase.

Adjust using a frequency standard (10 MHz) and a frequency error meter.

Adjust to $f < 1 \times 10^{-9}$ (= 10 mHz error at 10 MHz) after a warm-up time of 30 days.

6.3 Troubleshooting

6.3.1 General Notes

In order to locate a fault on the module, also refer to the adjustments.

6.3.2 Internal and External Reference Frequencies

OCXO (oven-controlled oscillator)

The OCXO (A171) is heated further in standby mode and with "Ext. ref.".

If the analyzer is switched on again after being disconnected from the power supply and having cooled down, the OCXO supply voltage may be less than 12 V for several minutes because of the high heating current.

With the setting "Int. ref.", a signal of 10 MHz, level > 10 dBm, is output at X34.

In the setting "Ext.ref.", X34 serves as an input.

IMPORTANT!

If the "Ext. ref." signal is missing or the level is too low or the frequency is not accurate to within 10^{-5}, the internal oscillator can no longer be synchronized and a permanent error message is output (see function description and adjustment instructions).

6.3.3 Checking the Oscillators

10-MHz oscillator

If "Ext. ref." is selected and no Ext. signal applied, the lock-in circuit of the PLL starts to run through the complete VCO characteristic in triangular form.

This search process can be followed at W36 using a frequency analyzer (f = 10 MHz, level = 3 dBm ± 2 dB).

The search process should be as symmetrical as possible around 10 MHz.

100-MHz oscillator

This is synchronized with the 10-MHz oscillator. In order to check its lock-in circuit, either the 10-MHz oscillator must be switched off on the module (by removing jumper X31) or the 10-fold 10-MHz signal must be short-circuited (reconnect from X230/2,3 to X230/3,4).

The lock-in can be followed at W31 in the same manner as described for the 10-MHz oscillator (f = 100 MHz, level = 10 dBm ± 1.5 dB).

Fault in the RF isolating stages

If an RF signal is missing in a branch, first measure the DC working point of the stage at the emitter

Example:

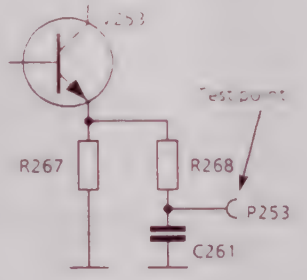

If the DC working point is correct, check the RF gain using an RF voltmeter.

ROHDE&SCHWARZ

Schaltteillisten
Stromläufe
Bestückungspläne

Part lists
Circuit diagrams
Components plans

Listes des pièces détachées
Schémas de Circuit
Plans des composants

(R 29500 Bl 2)
095.1000 Bl. 2

Kennz. Comp.No.	Benennung Designation	Sachnummer Stock No.	Hersteller Manufacturer	Bezeichnung Designation	enthalten in contained in
.	ZUGEH.STROML./CIRC.DIAGR. 0848.5000 S				
A171	ED 10MHZ-QU.OSZ.OCXO 12V 10MHZ CRYSTAL OSCILLATOR	807.8085	QUAKE	R&S-ZCHNG.807.8085	
B21	EQ 100MHZ 5. CL30 LF08 QUARTZ CRYSTAL UNIT	807.8079	TELEQUARZ	R&S-ZCHNG. 0807.8079	807.8133
B231	EQ 10MHZ 3. CL15P HC-47/U QUARTZ CRYSTAL UNIT	807.8062	KVG	R&S-ZCHNG.EQ807.8062	
C1	CE 2,2UF+-20%20V 5X 4X 7 ELECTROLYTIC CAPACITOR	CE 022.8104	ROEDERSTEI	ETR 1 2,2/20 20%	
C2	CE 2,2UF+-20%20V 5X 4X 7 ELECTROLYTIC CAPACITOR	CE 022.8104	ROEDERSTEI	ETR 1 2,2/20 20%	
C3	CC 220PF+-2%6X7N750 CAPACITOR	CC 087.6941	VALVO	2222 678 58221	
C4	CC 1,8PF+-0,25PF3X4P100 CAPACITOR	CC 087.6206	VALVO	2222 678 03188	
C5	CC 220PF+-2%6X7N750 CAPACITOR	CC 087.6941	VALVO	2222 678 58221	
C6	CC 220PF+-2%6X7N750 CAPACITOR	CC 087.6941	VALVO	2222 678 58221	
C7	CC 18PF+-2%3X4NP0 CAPACITOR	CC 087.6458	VALVO	2222 678 10189	
C8	CC 18PF+-2%3X4NP0 CAPACITOR	CC 087.6458	VALVO	2222 678 10189	
C21	CK 47NF+-5%63V5RM MKT CAPACITOR	CK 099.2917	WIMA	MKS 2	
C22	CC 220PF+-1%50V NP0 1206 CERAMIC CHIP CAPACITOR	CC 099.8850	VITRAMON	VJ1206 A 221 F FAT	
C23	CE 10UF+-20%25V SAL ELECTR.CAPACITOR	CE 007.3934	VALVO	2222 122 30006	
C24	CC 270PF+-1%50V NP0 1206 CERAMIC CHIP CAPACITOR	CC 099.8867	VITRAMON	VJ1206 A 271 F FAT	
C25	CC 18PF+- 5%100V NP0 VIEL CERAMIC CAPACITOR	CC 060 0688	UNIONCARB	CD52C180J2G1CA	
C26	CC 150PF+-1%50VNP0 1206 CERAMIC CHIP CAPACITOR	CC 099.8509	VITRAMON	VJ1206 A 151 F FAT	
C27	CC 220PF+-1%50V NP0 1206 CERAMIC CHIP CAPACITOR	CC 099.8850	VITRAMON	VJ1206 A 221 F FAT	
C29	CE 10UF+-20%25V SAL ELECTR.CAPACITOR	CE 007.3934	VALVO	2222 122 30006	
C30	CC 470PF+-1%50V NP0 1206 CERAMIC CHIP CAPACITOR	CC 099.8515	VITRAMON	VJ1206 A 471 F FAT	
C31	CC 470PF+-1%50V NP0 1206 CERAMIC CHIP CAPACITOR	CC 099.8515	VITRAMON	VJ1206 A 471 F FAT	
C35	CC 470PF+-1%50V NP0 1206 CERAMIC CHIP CAPACITOR	CC 099.8515	VITRAMON	VJ1206 A 471 F FAT	
C36	CC 15PF+-1%50V NP0 1206 CERAMIC CHIP CAPACITOR	CC 099.8750	VITRAMON	VJ1206 A 150 F FAT	
C37	CC 47PF+-1%50V COG 1206 CERAMIC CHIP CAPACITOR	CC 099.8496	VITRAMON	VJ1206 A 470 F FAT	
C38	CC 1NF+-10%50VX7R 1206 CERAMIC CHIP CAPACITOR	CC 099.8438	VITRAMON	VJ1206Y102KEA	
C39	CC 10NF+-10%50V X7R 1206 CERAMIC CHIP CAPACITOR	CC 099.8521	VITRAMON	VJ1206 Y 103 K FAT	
C41	CE 22UF-10+50% 63V 9X13 ELECTROLYTIC CAPACITOR	CE 006.7120	ROEDERST	EKM 00 CB 222 J	
C42	CE 2,2UF+-20%20V 5X 4X 7 ELECTROLYTIC CAPACITOR	CE 022.8104	ROEDERSTEI	ETR 1 2,2/20 20%	
C43	CE 2,2UF+-20%20V 5X 4X 7 ELECTROLYTIC CAPACITOR	CE 022.8104	ROEDERSTEI	ETR 1 2,2/20 20%	
C44	CC 220PF+-2%6X7N750 CAPACITOR	CC 087.6941	VALVO	2222 678 58221	
C45	CC 1,8PF+-0,25PF3X4P100 CAPACITOR	CC 087.6206	VALVO	2222 678 03188	
C46	CC 220PF+-2%6X7N750 CAPACITOR	CC 087.6941	VALVO	2222 678 58221	
C47	CC 18PF+-2%3X4NP0 CAPACITOR	CC 087.6458	VALVO	2222 678 10189	
C48	CC 18PF+-2%3X4NP0 CAPACITOR	CC 087.6458	VALVO	2222 678 10189	
C49	CC 220PF+-2%6X7N750 CAPACITOR	CC 087.6941	VALVO	2222 678 58221	
C50	CC 220PF+-2%6X7N750 CAPACITOR	CC 087.6941	VALVO	2222 678 58221	

Kennz. Comp.No.	Benennung Designation	Sachnummer Stock No.	Hersteller Manufacturer	Bezeichnung Designation	enthalten in contained in
C51	CE 2,2UF+-20%20V 5X 4X 7 ELECTROLYTIC CAPACITOR	CE 022.8104	ROEDERSTEI	ETR 1 2,2/20 20%	
C52	CE 2,2UF+-20%20V 5X 4X 7 ELECTROLYTIC CAPACITOR	CE 022.8104	ROEDERSTEI	ETR 1 2,2/20 20%	
C53	CC 1,8PF+-0,25PF3X4P100 CAPACITOR	CC 087.6206	VALVO	2222 678 03188	
C54	CC 220PF+-2%6X7N750 CAPACITOR	CC 087.6941	VALVO	2222 678 58221	
C55	CC 18PF+-2%3X4NP0 CAPACITOR	CC 087.6458	VALVO	2222 678 10189	
C56	CC 18PF+-2%3X4NP0 CAPACITOR	CC 087.6458	VALVO	2222 678 10189	
C57	CC 220PF+-2%6X7N750 CAPACITOR	CC 087.6941	VALVO	2222 678 58221	
C60	CC 1NF+-10%50VX7R 1206 CERAMIC CHIP CAPACITOR	CC 099.8438	VITRAMON	VJ1206Y102KFA	
C71	CC 220PF+-2%6X7N750 CAPACITOR	CC 087.6941	VALVO	2222 678 58221	
C72	CE 2,2UF+-20%35V 7X 5X11 ELECTROLYTIC CAPACITOR	CE 022.8191	ROEDERSTEI	ETR 3 2,2/40 20%	
C73	CC 330PF+-10%3X4R2000 CAPACITOR	CC 087.6970	VALVO	2222 63051 331	
C74	CK 10NF+-5%63V5RM MKT CAPACITOR	CK 099.2869	WIMA	MKS2	
C75	CE 2,2UF+-20%20V 5X 4X 7 ELECTROLYTIC CAPACITOR	CE 022.8104	ROEDERSTEI	ETR 1 2,2/20 20%	
C76	CE 2,2UF+-20%20V 5X 4X 7 ELECTROLYTIC CAPACITOR	CE 022.8104	ROEDERSTEI	ETR 1 2,2/20 20%	
C77	CC 1,2NF+-10%4X5R2000 CAPACITOR	CC 087.7031	VALVO	2222 63051 122	
C90	CC 470PF+-1%50V NP0 1206 CERAMIC CHIP CAPACITOR	CC 099.8515	VITRAMON	VJ1206 A 471 F FAT	
C91	CC 470PF+-1%50V NP0 1206 CERAMIC CHIP CAPACITOR	CC 099.8515	VITRAMON	VJ1206 A 471 F FAT	
C101	CC 120PF+-2%6X9NP0 CAPACITOR	CC 087.6558	VALVO	2222 678 10121	
C102	CK 47NF+-5%63V5RM MKT CAPACITOR	CK 099.2917	WIMA	MKS 2	
C103	CC 10PF+-0,25PF3X4NP0 CAPACITOR	CC 087.6429	VALVO	2222 678 09109	
C104	CC 100PF+-2%6X9NP0 CAPACITOR	CC 087.6541	VALVO	2222 678 10101	
C105	CC 10PF+-0,25PF3X4NP0 CAPACITOR	CC 087.6429	VALVO	2222 678 09109	
C106	CC 12PF+-2%3X4NP0 CAPACITOR	CC 087.6435	VALVO	2222 678 10129	
C108	CC 82PF+-2%6X7NP0 CAPACITOR	CC 087.6535	VALVO	2222 678 10829	
C111	CE 2,2UF+-20%20V 5X 4X 7 ELECTROLYTIC CAPACITOR	CE 022.8104	ROEDERSTEI	ETR 1 2,2/20 20%	
C112	CK 47NF+-5%63V5RM MKT CAPACITOR	CK 099.2917	WIMA	MKS 2	
C113	CK 47NF+-5%63V5RM MKT CAPACITOR	CK 099.2917	WIMA	MKS 2	
C114	CK 47NF+-5%63V5RM MKT CAPACITOR	CK 099.2917	WIMA	MKS 2	
C115	CE 10UF+-20%25V SAL ELECTR.CAPACITOR	CE 007.3934	VALVO	2222 122 30006	
C116	CK 330PF +-1% 100V RM5 KP POLYPROPYLENE CAPACITOR	CK 007.7569	ROE	KP1830-133/011-R	
C117	CK 47NF+-5%63V5RM MKT CAPACITOR	CK 099.2917	WIMA	MKS 2	
C118	CK 47NF+-5%63V5RM MKT CAPACITOR	CK 099.2917	WIMA	MKS 2	
C119	CC 47PF+-2%5X6NP0 CAPACITOR	CC 087.6506	VALVO	2222 678 10479	
C120	CK 680PF +-1% 100V RM5 KP POLYPROPYLENE CAPACITOR	CK 007.7581	ROE	KP1830-168/011-R	
C121	CC 47PF+-2%5X6NP0 CAPACITOR	CC 087.6506	VALVO	2222 678 10479	
C122	CE 22UF-10+50% 63V 9X13 ELECTROLYTIC CAPACITOR	CE 006.7120	ROEDERST	EKM 00 CB 222 J	
C123	CE 2,2UF+-20%20V 5X 4X 7 ELECTROLYTIC CAPACITOR	CE 022.8104	ROEDERSTEI	ETR 1 2,2/20 20%	
C124	CK 47NF+-5%63V5RM MKT CAPACITOR	CK 099.2917	WIMA	MKS 2	
C125	CK 47NF+-5%63V5RM MKT CAPACITOR	CK 099.2917	WIMA	MKS 2	

Kennz. Comp.No.	Benennung Designation	Sachnummer Stock No.	Hersteller Manufacturer	Bezeichnung Designation	enthalten in contained in
C126	CK 470PF +-1% 100V RM5 KP POLYPROPYLENE CAPACITOR	CK 007.7575	ROE	KP1830-147/011-R	
C127	CK 220PF +-1% 100V RM5 KP POLYPROPYLENE CAPACITOR	CK 007.7552	ROE	KP1830-122/011-R	
C128	CC 47PF+-2%5X6NP0 CAPACITOR	CC 087.6506	VALVO	2222 678 10479	
C129	CK 680PF +-1% 100V RM5 KP POLYPROPYLENE CAPACITOR	CK 007.7581	ROE	KP1830-168/011-R	
C130	TRIMMWERT / SELECTED				
C131	CC 22PF+-2%4X5NP0 CAPACITOR	CC 087.6464	VALVO	2222 678 10229	
C132	CK 47NF+-5%63V5RM MKT CAPACITOR	CK 099.2917	WIMA	MKS 2	
C133	CC 150PF+-2%5X6N750 CAPACITOR	CC 087.6929	VALVO	2222 678 58151	
C134	CE 2,2UF+-20%20V 5X 4X 7 ELECTROLYTIC CAPACITOR	CE 022.8104	ROEDERSTEI	ETR 1 2,2/20 20%	
C135	CE 2,2UF+-20%20V 5X 4X 7 ELECTROLYTIC CAPACITOR	CE 022.8104	ROEDERSTEI	ETR 1 2,2/20 20%	
C136	CC 15PF+-2%3X4NP0 CAPACITOR	CC 087.6441	VALVO	2222 678 10159	
C137	CK 47NF+-5%63V5RM MKT CAPACITOR	CK 099.2917	WIMA	MKS 2	
C138	CK 470PF +-1% 100V RM5 KP POLYPROPYLENE CAPACITOR	CK 007.7575	ROE	KP1830-147/011-R	
C139	CK 470PF +-1% 100V RM5 KP POLYPROPYLENE CAPACITOR	CK 007.7575	ROE	KP1830-147/011-R	
C140	CK 470PF +-1% 100V RM5 KP POLYPROPYLENE CAPACITOR	CK 007.7575	ROE	KP1830-147/011-R	
C141	CC 82PF+-2%6X7NP0 CAPACITOR	CC 087.6535	VALVO	2222 678 10829	
C151	CE 22UF-10+50% 63V 9X13 ELECTROLYTIC CAPACITOR	CE 006.7120	ROEDERST	EKM 00 CB 222 J	
C152	CE 22UF-10+50% 63V 9X13 ELECTROLYTIC CAPACITOR	CE 006.7120	ROEDERST	EKM 00 CB 222 J	
C153	CE 10UF+-20%25V SAL ELECTR.CAPACITOR	CE 007.3934	VALVO	2222 122 30006	
C154	CE 2,2UF+-20%20V 5X 4X 7 ELECTROLYTIC CAPACITOR	CE 022.8104	ROEDERSTEI	ETR 1 2,2/20 20%	
C155	CE 2,2UF+-20%20V 5X 4X 7 ELECTROLYTIC CAPACITOR	CE 022.8104	ROEDERSTEI	ETR 1 2,2/20 20%	
C156	CC 470PF+-1%50V NP0 1206 CERAMIC CHIP CAPACITOR	CC 099.8515	VITRAMON	VJ1206 A 471 F FAT	
C157	CC 470PF+-1%50V NP0 1206 CERAMIC CHIP CAPACITOR	CC 099.8515	VITRAMON	VJ1206 A 471 F FAT	
C159	CC 470PF+-1%50V NP0 1206 CERAMIC CHIP CAPACITOR	CC 099.8515	VITRAMON	VJ1206 A 471 F FAT	
C161 ...164	CC 10NF-20+50%7X8R4000 CAPACITOR	CC 087.7525	VALVO	2222 63051 64051103	
C165	CE 100UF-10+50% 16V 9X13 ELECTROLYTIC CAPACITOR	CE 006.7165	ROEDERST	EK 00CB 310 D	
C171	CE 2,2UF+-20%20V 5X 4X 7 ELECTROLYTIC CAPACITOR	CE 022.8104	ROEDERSTEI	ETR 1 2,2/20 20%	
C172	CE 2,2UF+-20%20V 5X 4X.7 ELECTROLYTIC CAPACITOR	CE 022.8104	ROEDERSTEI	ETR 1 2,2/20 20%	
C173	CC 5,6PF+-0,25PF3X4NP0 CAPACITOR	CC 087.6393	VALVO	2222 678 09568	
C174	CK 47NF+-5%63V5RM MKT CAPACITOR	CK 099.2917	WIMA	MKS 2	
C175	CK 1,0NF +-1% 100V RM5 KP POLYPROPYLENE CAPACITOR	CK 007.7598	ROE	KP1830-210/011-R	
C176	CK 1,0NF +-1% 100V RM5 KP POLYPROPYLENE CAPACITOR	CK 007.7598	ROE	KP1830-210/011-R	
C177	CK 1,5NF +-1% 100V RM5 KP POLYPROPYLENE CAPACITOR	CK 007.7600	ROE	KP1830-215/011-R	
C178	CK 47NF+-5%63V5RM MKT CAPACITOR	CK 099.2917	WIMA	MKS 2	
C179	CK 47NF+-5%63V5RM MKT CAPACITOR	CK 099.2917	WIMA	MKS 2	
C180	CK 47NF+-5%63V5RM MKT CAPACITOR	CK 099.2917	WIMA	MKS 2	
C181	CE 2,2UF+-20%20V 5X 4X 7 ELECTROLYTIC CAPACITOR	CE 022.8104	ROEDERSTEI	ETR 1 2,2/20 20%	
C182	CE 2,2UF+-20%20V 5X 4X 7 ELECTROLYTIC CAPACITOR	CE 022.8104	ROEDERSTEI	ETR 1 2,2/20 20%	
C183	CC 5,6PF+-0,25PF3X4NP0 CAPACITOR	CC 087.6393	VALVO	2222 678 09568	

Kennz. Comp.No.	Benennung Designation	Sachnummer Stock No.	Hersteller Manufacturer	Bezeichnung Designation	enthalten in contained in
C184	CK 47NF+-5%63V5RM MKT CAPACITOR	CK 099.2917	WIMA	MKS 2	
C185	CK 1,0NF +-1% 100V RM5 KP POLYPROPYLENE CAPACITOR	CK 007.7598	ROE	KP1830-210/011-R	
C186	CK 1,0NF +-1% 100V RM5 KP POLYPROPYLENE CAPACITOR	CK 007.7598	ROE	KP1830-210/011-R	
C187	CK 1,5NF +-1% 100V RM5 KP POLYPROPYLENE CAPACITOR	CK 007.7600	ROE	KP1830-215/011-R	
C190	CK 47NF+-5%63V5RM MKT CAPACITOR	CK 099.2917	WIMA	MKS 2	
C191	CK 47NF+-5%63V5RM MKT CAPACITOR	CK 099.2917	WIMA	MKS 2	
C195	CC 10NF-20+50%7X8R4000 CAPACITOR	CC 087.7525	VALVO	2222 63051 64051103	
C196	CC 10NF-20+50%7X8R4000 CAPACITOR	CC 087.7525	VALVO	2222 63051 64051103	
C201	CK 47NF+-5%63V5RM MKT CAPACITOR	CK 099.2917	WIMA	MKS 2	
C202	CE 47 UF+-20%35V12X12X11 ELECTROLYTIC CAPACITOR	CE 022.8233	ROEDERSTEI	ETR 5 47/40 20%	
C203	CC 330PF+-10%3X4R2000 CAPACITOR	CC 087.6970	VALVO	2222 63051 331	
C204	CK 10NF+-5%63V5RM MKT CAPACITOR	CK 099.2869	WIMA	MKS2	
C205	CE 2,2UF+-20%20V 5X 4X 7 ELECTROLYTIC CAPACITOR	CE 022.8104	ROEDERSTEI	ETR 1 2,2/20 20%	
C206	CE 2,2UF+-20%20V 5X 4X 7 ELECTROLYTIC CAPACITOR	CE 022.8104	ROEDERSTEI	ETR 1 2,2/20 20%	
C210	CC 1,2NF+-10%4X5R2000 CAPACITOR	CC 087.7031	VALVO	2222 63051 122	
C230	CC 47PF+-1%50V COG 1206 CERAMIC CHIP CAPACITOR	CC 099.8496	VITRAMON	VJ1206 A 470 F FAT	
C231	CE 47 UF+-20%35V12X12X11 ELECTROLYTIC CAPACITOR	CE 022.8233	ROEDERSTEI	ETR 5 47/40 20%	
C232	CE 10UF+-20%25V SAL ELECTR.CAPACITOR	CE 007.3934	VALVO	2222 122 30006	
C233	CK 3,3NF +-1% 63V RM5 KP POLYPROPYLENE CAPACITOR	CK 007.7623	ROE	KP1830-233/061-R	
C234	CK 47NF+-5%63V5RM MKT CAPACITOR	CK 099.2917	WIMA	MKS 2	
C236	CC 180PF+- 5%100V NPO VIE CERAMIC CAPACITOR	CC 060.0807	UNIONCARB	C052C181J2G1CA	
C237	CT 24PF N1500 LIEG.ABGL. TRIMMING CAPACITOR	CT 069.0568	STETTNER	7S0335N1500	
C238	CK 3,3NF +-1% 63V RM5 KP POLYPROPYLENE CAPACITOR	CK 007.7623	ROE	KP1830-233/061-R	
C239	CK 1,5NF +-1% 100V RM5 KP POLYPROPYLENE CAPACITOR	CK 007.7600	ROE	KP1830-215/011-R	
C240	CK 3,3NF +-1% 63V RM5 KP POLYPROPYLENE CAPACITOR	CK 007.7623	ROE	KP1830-233/061-R	
C241	CE 2,2UF+-20%20V 5X 4X 7 ELECTROLYTIC CAPACITOR	CE 022.8104	ROEDERSTEI	ETR 1 2,2/20 20%	
C242	CE 10UF+-20%25V SAL ELECTR.CAPACITOR	CE 007.3934	VALVO	2222 122 30006	
C243	CE 10UF+-20%25V SAL ELECTR.CAPACITOR	CE 007.3934	VALVO	2222 122 30006	
C245	CC 10NF-20+50%7X8R4000 CAPACITOR	CC 087.7525	VALVO	2222 63051 64051103	
C246	CC 10NF-20+50%7X8R4000 CAPACITOR	CC 087.7525	VALVO	2222 63051 64051103	
C247	CC 10NF+-10%50V X7R 1206 CERAMIC CHIP CAPACITOR	CC 099.8521	VITRAMON	VJ1206 Y 103 K FAT	
C248	CC 10NF+-10%50V X7R 1206 CERAMIC CHIP CAPACITOR	CC 099.8521	VITRAMON	VJ1206 Y 103 K FAT	
C251	CE 2,2UF+-20%20V 5X 4X 7 ELECTROLYTIC CAPACITOR	CE 022.8104	ROEDERSTEI	ETR 1 2,2/20 20%	
C252	CE 2,2UF+-20%20V 5X 4X 7 ELECTROLYTIC CAPACITOR	CE 022.8104	ROEDERSTEI	ETR 1 2,2/20 20%	
C253	CK 2,2NF +-1% 100V RM5 KP POLYPROPYLENE CAPACITOR	CK 007.7617	ROE	KP1830-222/011-R	
C254	CK 1,0NF +-1% 100V RM5 KP POLYPROPYLENE CAPACITOR	CK 007.7598	ROE	KP1830-210/011-R	
C255	CK 47NF+-5%63V5RM MKT CAPACITOR	CK 099.2917	WIMA	MKS 2	
C256	CK 47NF+-5%63V5RM MKT CAPACITOR	CK 099.2917	WIMA	MKS 2	
C257	CE 2,2UF+-20%20V 5X 4X 7 ELECTROLYTIC CAPACITOR	CE 022.8104	ROEDERSTEI	ETR 1 2,2/20 20%	

Kennz. Comp.No.	Benennung Designation	Sachnummer Stock No.	Hersteller Manufacturer	Bezeichnung Designation	enthalten in contained in
C258	CC 5,6PF+-0,25PF3X4NP0 CAPACITOR	CC 087.6393	VALVO	2222 678 09568	
C259	CE 10UF+-20%25V SAL ELECTR.CAPACITOR	CE 007.3934	VALVO	2222 122 30006	
C260	CE 2,2UF+-20%20V 5X 4X 7 ELECTROLYTIC CAPACITOR	CE 022.8104	ROEDERSTEI	ETR 1 2,2/20 20%	
C261	CK 47NF+-5%63V5RM MKT CAPACITOR	CK 099.2917	WIMA	MKS 2	
C262	CK 1,0NF +-1% 100V RM5 KP POLYPROPYLENE CAPACITOR	CK 007.7598	ROE	KP1830-210/011-R	
C263	CK 1,0NF +-1% 100V RM5 KP POLYPROPYLENE CAPACITOR	CK 007.7598	ROE	KP1830-210/011-R	
C264	CK 1,5NF +-1% 100V RM5 KP POLYPROPYLENE CAPACITOR	CK 007.7600	ROE	KP1830-215/011-R	
C265	CE 2,2UF+-20%20V 5X 4X 7 ELECTROLYTIC CAPACITOR	CE 022.8104	ROEDERSTEI	ETR 1 2,2/20 20%	
C266	CC 5,6PF+-0,25PF3X4NP0 CAPACITOR	CC 087.6393	VALVO	2222 678 09568	
C267	CE 2,2UF+-20%20V 5X 4X 7 ELECTROLYTIC CAPACITOR	CE 022.8104	ROEDERSTEI	ETR 1 2,2/20 20%	
C268	CK 47NF+-5%63V5RM MKT CAPACITOR	CK 099.2917	WIMA	MKS 2	
C269	CK 1,0NF +-1% 100V RM5 KP POLYPROPYLENE CAPACITOR	CK 007.7598	ROE	KP1830-210/011-R	
C270	CK 1,0NF +-1% 100V RM5 KP POLYPROPYLENE CAPACITOR	CK 007.7598	ROE	KP1830-210/011-R	
C271	CK 1,5NF +-1% 100V RM5 KP POLYPROPYLENE CAPACITOR	CK 007.7600	ROE	KP1830-215/011-R	
C272	CE 2,2UF+-20%20V 5X 4X 7 ELECTROLYTIC CAPACITOR	CE 022.8104	ROEDERSTEI	ETR 1 2,2/20 20%	
C273	CC 5,6PF+-0,25PF3X4NP0 CAPACITOR	CC 087.6393	VALVO	2222 678 09568	
C274	CE 2,2UF+-20%20V 5X 4X 7 ELECTROLYTIC CAPACITOR	CE 022.8104	ROEDERSTEI	ETR 1 2,2/20 20%	
C275	CK 47NF+-5%63V5RM MKT CAPACITOR	CK 099.2917	WIMA	MKS 2	
C276	CK 1,0NF +-1% 100V RM5 KP POLYPROPYLENE CAPACITOR	CK 007.7598	ROE	KP1830-210/011-R	
C277	CK 1,0NF +-1% 100V RM5 KP POLYPROPYLENE CAPACITOR	CK 007.7598	ROE	KP1830-210/011-R	
C278	CK 1,5NF +-1% 100V RM5 KP POLYPROPYLENE CAPACITOR	CK 007.7600	ROE	KP1830-215/011-R	
C300	CC 470PF+-1%50V NP0 1206 CERAMIC CHIP CAPACITOR	CC 099.8515	VITRAMON	VJ1206 A 471 F FAT	
C301	CC 470PF+-1%50V NP0 1206 CERAMIC CHIP CAPACITOR	CC 099.8515	VITRAMON	VJ1206 A 471 F FAT	
C305	CC 470PF+-1%50V NP0 1206 CERAMIC CHIP CAPACITOR	CC 099.8515	VITRAMON	VJ1206 A 471 F FAT	
C306	CC 470PF+-1%50V NP0 1206 CERAMIC CHIP CAPACITOR	CC 099.8515	VITRAMON	VJ1206 A 471 F FAT	
C310	CC 470PF+-1%50V NP0 1206 CERAMIC CHIP CAPACITOR	CC 099.8515	VITRAMON	VJ1206 A 471 F FAT	
C311	CC 470PF+-1%50V NP0 1206 CERAMIC CHIP CAPACITOR	CC 099.8515	VITRAMON	VJ1206 A 471 F FAT	
C315	CC 470PF+-1%50V NP0 1206 CERAMIC CHIP CAPACITOR	CC 099.8515	VITRAMON	VJ1206 A 471 F FAT	
C316	CC 470PF+-1%50V NP0 1206 CERAMIC CHIP CAPACITOR	CC 099.8515	VITRAMON	VJ1206 A 471 F FAT	
C320	CC 470PF+-1%50V NP0 1206 CERAMIC CHIP CAPACITOR	CC 099.8515	VITRAMON	VJ1206 A 471 F FAT	
C321	CC 470PF+-1%50V NP0 1206 CERAMIC CHIP CAPACITOR	CC 099.8515	VITRAMON	VJ1206 A 471 F FAT	
L1	LD 3,30UH10%0,850HM0,285A CHOKE	LD 067.2928	DELEVAN	DROSSEL1025-32	
L2	LD 3,30UH10%0,850HM0,285A CHOKE	LD 067.2928	DELEVAN	DROSSEL1025-32	
L3	LD 0,22UH10%0,140HM1,045A CHOKE	LD 067.2786	DELEVAN	DROSSEL1025-04	
L10	LF ROHRK.RD3,6XRD1,2XL3,3 TUBULAR CORE	LF 026.9286			
L21	LD 2,20UH10%0,400HM0,415A CHOKE	LD 067.2905	DELEVAN	DROSSEL1025-28	
L22	LD 0,68UH10%0,600HM0,500A CHOKE	LD 067.2840	DELEVAN	DROSSEL1025-16	
L23	LD 2,20UH10%0,400HM0,415A CHOKE	LD 067.2905	DELEVAN	DROSSEL1025-28	

Kennz. Comp.No.	Benennung Designation	Sachnummer Stock No.	Hersteller Manufacturer	Bezeichnung Designation	enthalten in contained in
L30	LF ROHRK.RD3,6XRD1,2XL3,3 TUBULAR CORE	LF 026.9286			
L31	LD SPULE 115NH 7,5W ALU-K COIL-CORE	807.3077	TOKO	E521 AN-070023	
L32	LD SPULE 170NH 5,5W FE-K COIL+CORE	801.4859	TOKO	E521 HN-050023	
L38	LD 2,20UH10%0,400HMO,415A CHOKE	LD 067.2905	DELEVAN	DROSSEL1025-28	
L39	LD 1,20UH10%0,180HMO,620A CHOKE	LD 067.2870	DELEVAN	DROSSEL1025-22	
L41	LD 3,30UH10%0,850HMO,285A CHOKE	LD 067.2928	DELEVAN	DROSSEL1025-32	
L42	LD 3,30UH10%0,850HMO,285A CHOKE	LD 067.2928	DELEVAN	DROSSEL1025-32	
L43	LD 0,22UH10%0,140HM1,045A CHOKE	LD 067.2786	DELEVAN	DROSSEL1025-04	
L44	LD 3,30UH10%0,850HMO,285A CHOKE	LD 067.2928	DELEVAN	DROSSEL1025-32	
L45	LD 3,30UH10%0,850HMO,285A CHOKE	LD 067.2928	DELEVAN	DROSSEL1025-32	
L46	LD 0,22UH10%0,140HM1,045A CHOKE	LD 067.2786	DELEVAN	DROSSEL1025-04	
L51	LF ROHRK.RD3,6XRD1,2XL3,3 TUBULAR CORE	LF 026.9286			
L52	LF ROHRK.RD3,6XRD1,2XL3,3 TUBULAR CORE	LF 026.9286			
L60	LD 1,20UH10%0,180HMO,620A CHOKE	LD 067.2870	DELEVAN	DROSSEL1025-22	
L71	LD 220 UH10%21,00HMO,052A CHOKE	LD 067.3147	DELEVAN	DROSSEL1025-76	
L72	LD 1,20UH10%0,180HMO,620A CHOKE	LD 067.2870	DELEVAN	DROSSEL1025-22	
L101	LD 2,20UH10%0,400HMO,415A CHOKE	LD 067.2905	DELEVAN	DROSSEL1025-28	
L102	LD 0,27UH10%0,160HMO,975A CHOKE	LD 067.2792	DELEVAN	DROSSEL1025-06	
L103	LD SPULE 30NH 1,5W FE-K CHOKE OHNE FERRITKERN WITHOUT FERRITE CORE	300.6647	COMPONEX	E521HN-010023	
L104	LD 0,27UH10%0,160HMO,975A CHOKE	LD 067.2792	DELEVAN	DROSSEL1025-06	
L106	LD 0,18UH10%0,120HM1,120A CHOKE	LD 067.2770	DELEVAN	DROSSEL1025-02	
L111	LD 47,0UH10%4,500HMO,110A CHOKE	LD 067.3060	DELEVAN	DROSSEL1025-60	
L112	LD 0,27UH10%0,160HMO,975A CHOKE	LD 067.2792	DELEVAN	DROSSEL1025-06	
L113	LD 0,27UH10%0,160HMO,975A CHOKE	LD 067.2792	DELEVAN	DROSSEL1025-06	
L114	LD 47,0UH10%4,500HMO,110A CHOKE	LD 067.3060	DELEVAN	DROSSEL1025-60	
L115	LD 1,50UH10%0,220HMO,560A CHOKE	LD 067.2886	DELEVAN	DROSSEL 1025-24	
L116	LD 100NH 10% 0,080HM 1,4A CHOKE	LD 067.2740	DELEVAN	DROSSEL1025-94	
L117	LD 1,50UH10%0,220HMO,560A CHOKE	LD 067.2886	DELEVAN	DROSSEL 1025-24	
L118	LD 47,0UH10%4,500HMO,110A CHOKE	LD 067.3060	DELEVAN	DROSSEL1025-60	
L119	LD 0,39UH10%0,300HMO,710A CHOKE	LD 067.2811	DELEVAN	DROSSEL1025-10	
L120	LD 1,50UH10%0,220HMO,560A CHOKE	LD 067.2886	DELEVAN	DROSSEL 1025-24	
L121	LD 100NH 10% 0,080HM 1,4A CHOKE	LD 067.2740	DELEVAN	DROSSEL1025-94	
L122	LD 1,50UH10%0,220HMO,560A CHOKE	LD 067.2886	DELEVAN	DROSSEL 1025-24	
L123	LD 100 UH10%8,000HMO,084A CHOKE	LD 067.3101	DELEVAN	DROSSEL1025-68	
L124	LD 0,39UH10%0,300HMO,710A CHOKE	LD 067.2811	DELEVAN	DROSSEL1025-10	
L125	LD 3,30UH10%0,850HMO,285A CHOKE	LD 067.2928	DELEVAN	DROSSEL1025-32	
L131	LD 0,27UH10%0,160HMO,975A CHOKE	LD 067.2792	DELEVAN	DROSSEL1025-06	
L151	LD UKW-DR.Z=750 OHM 50MHZ CHOKE	LD 026.4578	VALVO	431202036641	

Kennz. Comp.No.	Benennung Designation	Sachnummer Stock No.	Hersteller Manufacturer	Bezeichnung Designation	enthalten in contained in
L152	LD UKW-DR.Z=750 OHM 50MHZ CHOKE	LD 026.4578	VALVO	431202036641	
L153	LD 8,2 UH 10% 109 MIA CHOKE	LD 092.3260	DELEVAN		
L155	LD 1,20UH10%0,180HMO,620A CHOKE	LD 067.2870	DELEVAN	DROSSEL1025-22	
L171	LD 220 UH10%21,00HMO,052A CHOKE	LD 067.3147	DELEVAN	DROSSEL1025-76	
L172	LD 0,68UH10%0,600HMO,500A CHOKE	LD 067.2840	DELEVAN	DROSSEL1025-16	
L173	LD 220 UH10%21,00HMO,052A CHOKE	LD 067.3147	DELEVAN	DROSSEL1025-76	
L174	LD 0,68UH10%0,600HMO,500A CHOKE	LD 067.2840	DELEVAN	DROSSEL1025-16	
L175	LD 220 UH10%21,00HMO,052A CHOKE	LD 067.3147	DELEVAN	DROSSEL1025-76	
L201	LD 220 UH10%21,00HMO,052A CHOKE	LD 067.3147	DELEVAN	DROSSEL1025-76	
L202	LD 1,20UH10%0.180HMO,620A CHOKE	LD 067.2870	DELEVAN	DROSSEL1025-22	
L231	LD 220 UH10%21,00HMO,052A CHOKE	LD 067.3147	DELEVAN	DROSSEL1025-76	
L233	LD 220 UH10%21,00HMO,052A CHOKE	LD 067.3147	DELEVAN	DROSSEL1025-76	
L234	LD 1,5UH 5% OR2 0,56A CHOKE	067.3247	INDUSTRIA	DROSSEL1025-24+5%	
L236	LD 220 UH10%21,00HMO,052A CHOKE	LD 067.3147	DELEVAN	DROSSEL1025-76	
L239	LF ROHRK.RD3,6XRD1,2XL3,3 TUBULAR CORE	LF 026.9286			
L240	LD 220 UH10%21,00HMO,052A CHOKE	LD 067.3147	DELEVAN	DROSSEL1025-76	
L251	LD 220 UH10%21,00HMO,052A CHOKE	LD 067.3147	DELEVAN	DROSSEL1025-76	
L252	LD 220 UH10%21,00HMO,052A CHOKE	LD 067.3147	DELEVAN	DROSSEL1025-76	
L253	LD 0,39UH10%0,300HMO,710A CHOKE	LD 067.2811	DELEVAN	DROSSEL1025-10	
L254	LD 220 UH10%21,00HMO,052A CHOKE	LD 067.3147	DELEVAN	DROSSEL1025-76	
L255	LD 0,68UH10%0,600HMO,500A CHOKE	LD 067.2840	DELEVAN	DROSSEL1025-16	
L256	LD 220 UH10%21,00HMO,052A CHOKE	LD 067.3147	DELEVAN	DROSSEL1025-76	
L257	LD 0,68UH10%0,600HMO,500A CHOKE	LD 067.2840	DELEVAN	DROSSEL1025-16	
L258	LD 220 UH10%21,00HMO,052A CHOKE	LD 067.3147	DELEVAN	DROSSEL1025-76	
L259	LD 0,68UH10%0,600HMO,500A CHOKE	LD 067.2840	DELEVAN	DROSSEL1025-16	
N71	BO SE5534AFE LOW N.OPAMP OPERATIONAL AMPLIFIER	BO 301.3335	SIGNETICS	SE5534AFE	
N72	BO RC4558DN 2X OPAMP OPERATIONAL AMPLIFIER	BO 475.1672	TEXAS INST	RC4558P	
N151	BO RC4558DN 2X OPAMP OPERATIONAL AMPLIFIER	BO 475.1672	TEXAS INST	RC4558P	
N152	BO TCA965 FENSTER-DISKR DISCRIMINATOR	BO 279.2213	SIEMENS	TCA965	
N168	BO OP27GZ LOW N.OPAMP OPERATIONAL AMPLIFIER	BO 393.2599	PMI	OP27GZ	
N201	BO SE5534AFE LOW N.OPAMP OPERATIONAL AMPLIFIER	BO 301.3335	SIGNETICS	SE5534AFE	
N202	BO RC4558DN 2X OPAMP OPERATIONAL AMPLIFIER	BO 475.1672	TEXAS INST	RC4558P	
030	VL STECKLOETOESE 7,5X1,1 PLUG-IN SOLDERING LUG	VL 078.2747	-	R&S-ZCHNG.078.2747	
0214	VL STECKLOETOESE 7,5X1,1 PLUG-IN SOLDERING LUG	VL 078.2747	-	R&S-ZCHNG.078.2747	
0330	VL LOETOESE 8,5 X 0,9 SOLDER LUG	455.9384	VOGT&CO	R&S-ZCHNG.455.9384	
P1	BEMERKUNG / PLEASE NOTE TEST-PIN				
P20	BEMERKUNG / PLEASE NOTE TEST-PIN				

Kennz. Comp.No.	Benennung Designation	Sachnummer Stock No.	Hersteller Manufacturer	Bezeichnung Designation	enthalten in contained in
P41	BEMERKUNG / PLEASE NOTE TEST-PIN				
P42	BEMERKUNG / PLEASE NOTE TEST-PIN				
P113	BEMERKUNG / PLEASE NOTE TEST-PIN				
P114	BEMERKUNG / PLEASE NOTE TEST-PIN				
P115	BEMERKUNG / PLEASE NOTE TEST-PIN				
P151	BEMERKUNG / PLEASE NOTE TEST-PIN				
P152	BEMERKUNG / PLEASE NOTE TEST-PIN				
P171	BEMERKUNG / PLEASE NOTE TEST-PIN				
P172	BEMERKUNG / PLEASE NOTE TEST-PIN				
P175	BEMERKUNG / PLEASE NOTE TEST-PIN				
P179	BEMERKUNG / PLEASE NOTE TEST-PIN				
P180	BEMERKUNG / PLEASE NOTE TEST-PIN				
P230	BEMERKUNG / PLEASE NOTE TEST-PIN				
P235	BEMERKUNG / PLEASE NOTE TEST-PIN				
P236	BEMERKUNG / PLEASE NOTE TEST-PIN				
P252	BEMERKUNG / PLEASE NOTE TEST-PIN				
P253	BEMERKUNG / PLEASE NOTE TEST-PIN				
P254	BEMERKUNG / PLEASE NOTE TEST-PIN				
P255	BEMERKUNG / PLEASE NOTE TEST-PIN				
R1	RL 0,35W 100 OHM+-1%TK50 RESISTOR	RL 082.6543	DRALORIC	SMA0207/100/HM-F-D	
R2	RL 0,21W 2,74KOHM+-1%TK50 RESISTOR	RL 092.1496	RESISTA	MK1 2K74 1% TK50	
R3	RL 0,21W 2,21KOHM+-1%TK50 RESISTOR	RL 092.1480	RESISTA	MK1 2K21 1% TK50	
R5	RL 0,35W 150 OHM+-1%TK50 RESISTOR	RL 082.9942	DRALORIC	SMA0207/150OHM-F-D	
R6	RL 0,21W18,7 OHM+-1%TK50 RESISTOR	RL 092.1021	RESISTA	MK1/18,70HM1%TK50	
R7	RG 316 OHM+-2%TK200 1206 CHIP RESISTOR	006.9000	DRALORIC	CGB3216 316OHM2% TK	
R8	RG 17,8 OHM+-2%TK200 1206 CHIP RESISTOR	006.8703	DRALORIC	CGB3216 17,80HM2% TK	
R9	RG 316 OHM+-2%TK200 1206 CHIP RESISTOR	006.9000	DRALORIC	CGB3216 316OHM2% TK	
R19	RL 0,21W 1,00KOHM+-1%TK50 RESISTOR	RL 092.1444	RESISTA	MK1 1K00 1% TK50	
R20	RL 0,21W 47 OHM2% UNGEW. RESISTOR	RL 092.5910	RESISTA	MK1 470HM 2% UNGEW.	
R21	RL 0,35W 47,5 OHM+-1%TK50 RESISTOR	RL 082.9507	DRALORIC	SMA0207/47,50HM-F-D	
R22	RL 0,21W 475 OHM+-1%TK50 RESISTOR	RL 092.1409	RESISTA	MK1 4750HM 1% TK50	
R23	RL 0,21W 10,0KOHM+-1%TK50 RESISTOR	RL 092.1567	RESISTA	MK1 10KO 1% TK50	
R24	RL 0,21W 4,75KOHM+-1%TK50 RESISTOR	RL 092.1521	RESISTA	MK1 4K75 1% TK50	
R25	RL 0,21W 47,5 OHM+-1%TK50 RESISTOR	RL 092.1267	RESISTA	MK1 47,50HM 1% TK50	
R26	RG 34,8 OHM+-2%TK200 1206 CHIP RESISTOR	006.8778	DRALORIC	CGB3216 34,80HM2% TK	
R27	RL 0,21W 27,4 OHM+-1%TK50 RESISTOR	RL 092.1238	RESISTA	MK1 27,40HM 1% TK50	
R28	RL 0,35W 4,75KOHM+-1%TK50 RESISTOR	RL 083.1097	DRALORIC	SMA0207/4,75K-F-D	
R29	RL 0,35W22,10 OHM+-1%TK50 RESISTOR	RL 082.9188	DRALORIC	SMA0207/22,10HM-F-D	

Kennz. Comp.No.	Benennung Designation	Sachnummer Stock No.	Hersteller Manufacturer	Bezeichnung Designation	enthalten in contained in
R30	RK KALTL 8 OHM 0,8W PTC-RESISTOR	300.6730	SIEMENS	Q63100-P330-A14	807.8133
R34	RL 0,35W 33,2 OHM+-1%TK50 RESISTOR	RL 082.9359	DRALORIC	SMA0207/33,20HM-F-D	
R36	RL 0,35W 33,2 OHM+-1%TK50 RESISTOR	RL 082.9359	DRALORIC	SMA0207/33,20HM-F-D	
R37	RL 0,35W 221 OHM+-1%TK50 RESISTOR	RL 083.0084	DRALORIC	SMA0207/2210HM-F-D	
R38	RL 0,35W 475 OHM+-1%TK50 RESISTOR	RL 083.0390	DRALORIC	SMA0207/4750HM-F-D	
R41	RL 0,35W 1KOHM+-1%TK50 RESISTOR	RL 082.2160	DRALORIC	SMA0207/1K-F-C	
R42	RL 0,35W 100 OHM+-1%TK50 RESISTOR	RL 082.6543	DRALORIC	SMA0207/100/HM-F-D	
R43	RL 0,21W 2,74KOHM+-1%TK50 RESISTOR	RL 092.1496	RESISTA	MK1 2K74 1% TK50	
R44	RL 0,21W 2,21KOHM+-1%TK50 RESISTOR	RL 092.1480	RESISTA	MK1 2K21 1% TK50	
R45	RG 178 OHM+-2%TK200 1206 CHIP RESISTOR	006.8949	DRALORIC	CGB3216 1780HM2% TK	
R46	RL 0,35W 221 OHM+-1%TK50 RESISTOR	RL 083.0084	DRALORIC	SMA0207/2210HM-F-D	
R47	RL 0,21W 22,1 OHM+-1%TK50 RESISTOR	RL 092.1221	RESISTA	MK1 22,10HM 1% TK50	
R48	RG 121 OHM+-1%TK100 1206 CHIP RESISTOR	RG 006.8903	DALE	CRCW1206-10 121R F-T	
R49	RL 0,35W 56,2 OHM+-1%TK50 RESISTOR	RL 082.9571	DRALORIC	SMA0207/56,20HM-F-D	
R50	RG 121 OHM+-1%TK100 1206 CHIP RESISTOR	RG 006.8903	DALE	CRCW1206-10 121R F-T	
R51	RL 0,21W 2,74KOHM+-1%TK50 RESISTOR	RL 092.1496	RESISTA	MK1 2K74 1% TK50	
R52	RL 0,21W 2,21KOHM+-1%TK50 RESISTOR	RL 092.1480	RESISTA	MK1 2K21 1% TK50	
R53	RL 0,35W 100 OHM+-1%TK50 RESISTOR	RL 082.6543	DRALORIC	SMA0207/100/HM-F-D	
R54	RL 0,35W 150 OHM+-1%TK50 RESISTOR	RL 082.9942	DRALORIC	SMA0207/1500HM-F-D	
R55	RL 0,21W 33,2 OHM+-1%TK50 RESISTOR	RL 092.1244	RESISTA	MK1 33,20HM 1% TK50	
R56	RG 178 OHM+-2%TK200 1206 CHIP RESISTOR	006.8949	DRALORIC	CGB3216 1780HM2% TK	
R57	RL 0,35W 33,2 OHM+-1%TK50 RESISTOR	RL 082.9359	DRALORIC	SMA0207/33,20HM-F-D	
R71	RG 178 OHM+-2%TK200 1206 CHIP RESISTOR	006.8949	DRALORIC	CGB3216 1780HM2% TK	
R72	RL 0,21W 56,2 OHM+-1%TK50 RESISTOR	RL 092.1280	RESISTA	MK1 56,20HM 1% TK50	
R73	RL 0,21W 33,2 OHM+-1%TK50 RESISTOR	RL 092.1244	RESISTA	MK1 33,20HM 1% TK50	
R74	RL 0,21W 22,1 OHM+-1%TK50 RESISTOR	RL 092.1221	RESISTA	MK1 22,10HM 1% TK50	
R75	RL 0,21W 2,74KOHM+-1%TK50 RESISTOR TRIMMWERT	RL 092.1496	RESISTA	MK1 2K74 1% TK50	
R76	RL 0,21W 15,0KOHM+-1%TK50 RESISTOR	RL 092.1580	RESISTA	MK1 15K 1% TK50	
R77	RL 0,21W 100 KOHM+-1%TK50 RESISTOR	RL 092.1680	RESISTA	MK1 100K 10% TK50	
R78	RL 0,35W 221 KOHM+-1%TK50 RESISTOR	RL 083.2270	DRALORIC	SMA0207/221K-F-C	
R79	RL 0,35W 221 KOHM+-1%TK50 RESISTOR	RL 083.2270	DRALORIC	SMA0207/221K-F-C	
R80	RL 0,21W 100 KOHM+-1%TK50 RESISTOR	RL 092.1680	RESISTA	MK1 100K 10% TK50	
R81	RL 0,35W 4,75KOHM+-1%TK50 RESISTOR	RL 083.1097	DRALORIC	SMA0207/4,75K-F-D	
R82	RL 0,35W 22,1KOHM+-1%TK50 RESISTOR	RL 083.1545	DRALORIC	SMA/207/22,1K-F-C	
R85	RL 0,35W 22,1KOHM+-1%TK50 RESISTOR	RL 083.1545	DRALORIC	SMA/207/22,1K-F-C	
R86	RL 0,35W 100KOHM+-1%TK50 RESISTOR	RL 082.1764	DRALORIC	SMA0207/100K-F-C	
R87	RL 0,35W 18,2KOHM+-1%TK50 RESISTOR	RL 083.1480	DRALORIC	SMA/207/18,2K-F-C	
R88	RL 0,35W 33,2KOHM+-1%TK50 RESISTOR	RL 083.1674	DRALORIC	SMA0207/33,2K-F-C	

Kennz. Comp.No.	Benennung Designation	Sachnummer Stock No.	Hersteller Manufacturer	Bezeichnung Designation	enthalten in contained in
R89	RL 0,35W 10,0KOHM+-1%TK50 RESISTOR	RL 083.1297	DRALORIC	SMA0207/10K-F-D	
R90	RL 0,21W 100 KOHM+-1%TK50 RESISTOR	RL 092.1680	RESISTA	MK1 100K 10% TK50	
R91	RL 0,21W 18,2KOHM+-1%TK50 RESISTOR	RL 092.1596	RESISTA	MK1 18K2 1% TK50	
R95	RL 0,21W 33,2 OHM+-1%TK50 RESISTOR	RL 092.1244	RESISTA	MK1 33,2OHM 1% TK50	
R101	RL 0,21W 392 OHM+-1%TK50 RESISTOR	RL 092.1396	RESISTA	MK1 392OHM 1% TK50	
R111	RL 0,21W 1,00KOHM+-1%TK50 RESISTOR	RL 092.1444	RESISTA	MK1 1K00 1% TK50	
R112	RL 0,21W 2,21KOHM+-1%TK50 RESISTOR	RL 092.1480	RESISTA	MK1 2K21 1% TK50	
R113	RL 0,21W 182 OHM+-1%TK50 RESISTOR	RL 092.1350	RESISTA	MK1 182OHM 1% TK50	
R114	RL 0,21W 681 OHM+-1%TK50 RESISTOR	RL 092.1421	RESISTA	MK1 681OHM 1% TK50	
R115	RL 0,35W22,10 OHM+-1%TK50 RESISTOR	RL 082.9188	DRALORIC	SMA0207/22,1OHM-F-D	
R116	RL 0,21W 39,2 OHM+-1%TK50 RESISTOR	RL 092.1250	RESISTA	MK1 39,2OHM 1% TK50	
R117	RL 0,35W 82,5 OHM+-1%TK50 RESISTOR	RL 082.9707	DRALORIC	SMA0207/82,5OHM-F-D	
R118	RL 0,21W 33,2 OHM+-1%TK50 RESISTOR	RL 092.1244	RESISTA	MK1 33,2OHM 1% TK50	
R119	RL 0,35W22,10 OHM+-1%TK50 RESISTOR	RL 082.9188	DRALORIC	SMA0207/22,1OHM-F-D	
R120	RL 0,21W 1,00KOHM+-1%TK50 RESISTOR	RL 092.1444	RESISTA	MK1 1K00 1% TK50	
R121	RL 0,21W 100 OHM+-1%TK50 DEPOS.-CARBON RESISTOR	RL 092.1321	RESISTA	MK1 100OHM 1% TK50	
R122	RL 0,21W 2,21KOHM+-1%TK50 RESISTOR	RL 092.1480	RESISTA	MK1 2K21 1% TK50	
R123	RL 0,21W 681 OHM+-1%TK50 RESISTOR	RL 092.1421	RESISTA	MK1 681OHM 1% TK50	
R124	RL 0,35W 82,5 OHM+-1%TK50 RESISTOR	RL 082.9707	DRALORIC	SMA0207/82,5OHM-F-D	
R125	RL 0,21W 22,1 OHM+-1%TK50 RESISTOR	RL 092.1221	RESISTA	MK1 22,1OHM 1% TK50	
R126	RL 0,21W 2,21KOHM+-1%TK50 RESISTOR	RL 092.1480	RESISTA	MK1 2K21 1% TK50	
R127	RL 0,21W 100 OHM+-1%TK50 DEPOS.-CARBON RESISTOR	RL 092.1321	RESISTA	MK1 100OHM 1% TK50	
R128	RL 0,21W 3,92KOHM+-1%TK50 RESISTOR	RL 092.1515	RESISTA	MK1 3K92 1% TK50	
R129	RL 0,35W 100 OHM+-1%TK50 RESISTOR	RL 082.6543	DRALORIC	SMA0207/100/HM-F-D	
R130	RL 0,35W 150 OHM+-1%TK50 RESISTOR	RL 082.9942	DRALORIC	SMA0207/150OHM-F-D	
R131	RL 0,21W 12,1 OHM+-1%TK50 RESISTOR	RL 092.1196	RESISTA	MK1	
R132	RG 178 OHM+-2%TK200 1206 CHIP RESISTOR	006.8949	DRALORIC	CGB3216 178OHM2% TK	
R133	RG 31,6 OHM+-2%TK200 1206 CHIP RESISTOR	006.8761	DRALORIC	CGB3216 31,6OHM2% TK	
R134	RG 178 OHM+-2%TK200 1206 CHIP RESISTOR	006.8949	DRALORIC	CGB3216 178OHM2% TK	
R135	RL 0-OHM-WIDERST. 0204 0-OHM RESISTOR	RL 069.0000	DRALORIC	OMA 0204	
R152	RL 0,35W 100 OHM+-1%TK50 RESISTOR	RL 082.6543	DRALORIC	SMA0207/100/HM-F-D	
R153	RL 0,35W 221 OHM+-1%TK50 RESISTOR	RL 083.0084	DRALORIC	SMA0207/221OHM-F-D	
R154	RL 0,35W 100 OHM+-1%TK50 RESISTOR	RL 082.6543	DRALORIC	SMA0207/100/HM-F-D	
R155	RL 0,35W 33,2KOHM+-1%TK50 RESISTOR	RL 083.1674	DRALORIC	SMA0207/33,2K-F-C	
R156	RL 0,35W 47,5KOHM+-1%TK50 RESISTOR	RL 083.1800	DRALORIC	SMA/207/47,5K-F-C	
R157	RL 0,35W 3,32KOHM+-1%TK50 RESISTOR	RL 083.0990	DRALORIC	SMA0207/3,32K-F-D	
R158	RL 0,35W 10,0KOHM+-1%TK50 RESISTOR	RL 083.1297	DRALORIC	SMA0207/10K-F-D	
R159	RL 0,35W 10,0KOHM+-1%TK50 RESISTOR	RL 083.1297	DRALORIC	SMA0207/10K-F-D	
R160	RL 0,35W 10,0KOHM+-1%TK50 RESISTOR	RL 083.1297	DRALORIC	SMA0207/10K-F-D	

Kennz. Comp.No.	Benennung Designation	Sachnummer Stock No.	Hersteller Manufacturer	Bezeichnung Designation	enthalten in contained in
R161	RL 0,35W 475 OHM+-1%TK50 RESISTOR	RL 083.0390	DRALORIC	SMA0207/475OHM-F-D	
R162	RL 0,35W 10,0KOHM+-1%TK50 RESISTOR	RL 083.1297	DRALORIC	SMA0207/10K-F-D	
R163	RL 0,35W 4,75KOHM+-1%TK50 RESISTOR	RL 083.1097	DRALORIC	SMA0207/4,75K-F-D	
R164	RL 0,35W 1KOHM+-1%TK50 RESISTOR	RL 082.2160	DRALORIC	SMA0207/1K-F-C	
R165	RL 0,35W 4,75KOHM+-1%TK50 RESISTOR	RL 083.1097	DRALORIC	SMA0207/4,75K-F-D	
R166	RL 0,35W 22,1KOHM+-1%TK50 RESISTOR	RL 083.1545	DRALORIC	SMA/207/22,1K-F-C	
R167	RL 0,35W 10,0KOHM+-1%TK50 RESISTOR	RL 083.1297	DRALORIC	SMA0207/10K-F-D	
R168	RL 0,35W 1,50KOHM+-1%TK50 RESISTOR	RL 083.0732	DRALORIC	SMA0207/1,50K-F-D	
R169	RL 0,35W 10,0KOHM+-1%TK50 RESISTOR	RL 083.1297	DRALORIC	SMA0207/10K-F-D	
R170	RL 0,21W 1,00KOHM+-1%TK50 RESISTOR	RL 092.1444	RESISTA	MK1 1K00 1% TK50	
R171	RL 0,35W 56,2 OHM+-1%TK50 RESISTOR	RL 082.9571	DRALORIC	SMA0207/56,2OHM-F-D	
R172	RL 0,35W 150 OHM+-1%TK50 RESISTOR	RL 082.9942	DRALORIC	SMA0207/150OHM-F-D	
R173	RL 0,21W 12,1 OHM+-1%TK50 RESISTOR	RL 092.1196	RESISTA	MK1	
R174	RL 0,35W 56,2 OHM+-1%TK50 RESISTOR	RL 082.9571	DRALORIC	SMA0207/56,2OHM-F-D	
R176	RL 0,35W 1,21KOHM+-1%TK50 RESISTOR	RL 083.0655	DRALORIC	SMA0207/1,21K-F-D	
R177	RL 0,35W 1,50KOHM+-1%TK50 RESISTOR	RL 083.0732	DRALORIC	SMA0207/1,50K-F-D	
R178	RL 0,35W 1,50KOHM+-1%TK50 RESISTOR	RL 083.0732	DRALORIC	SMA0207/1,50K-F-D	
R179	RL 0,35W 10,0KOHM+-1%TK50 RESISTOR	RL 083.1297	DRALORIC	SMA0207/10K-F-D	
R180	RL 0,35W 1KOHM+-1%TK50 RESISTOR	RL 082.2160	DRALORIC	SMA0207/1K-F-C	
R181	RL 0,35W 4,75KOHM+-1%TK50 RESISTOR	RL 083.1097	DRALORIC	SMA0207/4,75K-F-D	
R182	RL 0,35W 3,92KOHM+-1%TK50 RESISTOR	RL 083.1039	RESISTA	MK2	
R183	RL 0,35W 1KOHM+-1%TK50 RESISTOR	RL 082.2160	DRALORIC	SMA0207/1K-F-C	
R184	RL 0,35W 150 OHM+-1%TK50 RESISTOR	RL 082.9942	DRALORIC	SMA0207/150OHM-F-D	
R185	RL 0,21W 12,1 OHM+-1%TK50 RESISTOR	RL 092.1196	RESISTA	MK1	
R186	RL 0,35W 33,2 OHM+-1%TK50 RESISTOR	RL 082.9359	DRALORIC	SMA0207/33,2OHM-F-D	
R187	RG 178 OHM+-2%TK200 1206 CHIP RESISTOR	006.8949	DRALORIC	CGB3216 178OHM2% TK	
R190	RL 0,21W 1,00KOHM+-1%TK50 RESISTOR	RL 092.1444	RESISTA	MK1 1K00 1% TK50	
R191	RL 0,21W 1,00KOHM+-1%TK50 RESISTOR	RL 092.1444	RESISTA	MK1 1K00 1% TK50	
R201	RG 178 OHM+-2%TK200 1206 CHIP RESISTOR	006.8949	DRALORIC	CGB3216 178OHM2% TK	
R202	RL 0,21W 56,2 OHM+-1%TK50 RESISTOR	RL 092.1280	RESISTA	MK1 56,2OHM 1% TK50	
R203	RL 0,21W 1,00KOHM+-1%TK50 RESISTOR	RL 092.1444	RESISTA	MK1 1K00 1% TK50	
R204	RL 0,21W 1,00KOHM+-1%TK50 RESISTOR	RL 092.1444	RESISTA	MK1 1K00 1% TK50	
R205	RL 0,21W 22,1 OHM+-1%TK50 RESISTOR	RL 092.1221	RESISTA	MK1 22,1OHM 1% TK50	
R206	RL 0,21W 5,62KOHM+-1%TK50 RESISTOR	RL 092.1538	RESISTA	MK1 5K62 1% TK50	
R207	RL 0,21W 100 KOHM+-1%TK50 RESISTOR	RL 092.1680	RESISTA	MK1 100K 10% TK50	
R208	RL 0,35W 221 KOHM+-1%TK50 RESISTOR	RL 083.2270	DRALORIC	SMA0207/221K-F-C	
R209	RL 0,35W 221 KOHM+-1%TK50 RESISTOR	RL 083.2270	DRALORIC	SMA0207/221K-F-C	
R210	RL 0,21W 100 KOHM+-1%TK50 RESISTOR	RL 092.1680	RESISTA	MK1 100K 10% TK50	
R211	RL 0,35W 4,75KOHM+-1%TK50 RESISTOR	RL 083.1097	DRALORIC	SMA0207/4,75K-F-D	

Kennz. Comp.No.	Benennung Designation	Sachnummer Stock No.	Hersteller Manufacturer	Bezeichnung Designation	enthalten in contained in
R212	RL 0,35W 22,1KOHM+-1%TK50 RESISTOR	RL 083.1545	DRALORIC	SMA/207/22,1K-F-C	
R213	RL 0,35W 22,1KOHM+-1%TK50 RESISTOR	RL 083.1545	DRALORIC	SMA/207/22,1K-F-C	
R214	RL 0,35W 100KOHM+-1%TK50 RESISTOR	RL 082.1764	DRALORIC	SMA0207/100K-F-C	
R215	RL 0,35W 18,2KOHM+-1%TK50 RESISTOR	RL 083.1480	DRALORIC	SMA/207/18,2K-F-C	
R216	RL 0,35W 33,2KOHM+-1%TK50 RESISTOR	RL 083.1674	DRALORIC	SMA0207/33,2K-F-C	
R217	RL 0,35W 10,0KOHM+-1%TK50 RESISTOR	RL 083.1297	DRALORIC	SMA0207/10K-F-D	
R218	RL 0,21W 1,00KOHM+-1%TK50 RESISTOR	RL 092.1444	RESISTA	MK1 1K00 1% TK50	
R220	RL 0,35W 475 OHM+-1%TK50 RESISTOR	RL 083.0390	DRALORIC	SMA0207/475OHM-F-D	
R221	RL 0,21W 100 KOHM+-1%TK50 RESISTOR	RL 092.1680	RESISTA	MK1 100K 10% TK50	
R222	RL 0,21W 18,2KOHM+-1%TK50 RESISTOR	RL 092.1596	RESISTA	MK1 18K2 1% TK50	
R231	RL 0,21W 10,0KOHM+-1%TK50 RESISTOR	RL 092.1567	RESISTA	MK1 10KO 1% TK50	
R232	RL 0,35W1,62KOHM+-0,1%T25 RESISTOR	RL 083.9546	DRALORIC	0207 1,62KOHM 0,1%	
R233	RL 0,21W 221 OHM+-1%TK50 RESISTOR	RL 092.1367	RESISTA	MK1 221OHM 1% TK50	
R234	RL 0,21W 100 OHM+-1%TK50 DEPOS.-CARBON RESISTOR	RL 092.1321	RESISTA	MK1 100OHM 1% TK50	
R235	RL 0,21W 47,5 OHM+-1%TK50 RESISTOR	RL 092.1267	RESISTA	MK1 47,5OHM 1% TK50	
R236	RL 0,21W 392 OHM+-1%TK50 RESISTOR	RL 092.1396	RESISTA	MK1 392OHM 1% TK50	
R237	RL 0,21W 47,5 OHM+-1%TK50 RESISTOR	RL 092.1267	RESISTA	MK1 47,5OHM 1% TK50	
R238	RL 0,35W 2,21KOHM+-1%TK50 RESISTOR	RL 082.2477	DRALORIC	SMA 0207/2,21K-F-C	
R239	RL 0,35W 10,0 OHM+-1%TK50 RESISTOR	RL 082.8852	DRALORIC	SMA0207/10OHM-F-D	
R240	RL 0,21W 4,75KOHM+-1%TK50 RESISTOR	RL 092.1521	RESISTA	MK1 4K75 1% TK50	
R241	RL 0,21W 4,75KOHM+-1%TK50 RESISTOR	RL 092.1521	RESISTA	MK1 4K75 1% TK50	
R242	RL 0,35W22,10 OHM+-1%TK50 RESISTOR	RL 082.9188	DRALORIC	SMA0207/22,1OHM-F-D	
R243	RL 0,35W 56,2 OHM+-1%TK50 RESISTOR	RL 082.9571	DRALORIC	SMA0207/56,2OHM-F-D	
R244	RG 34,8 OHM+-2%TK200 1206 CHIP RESISTOR	006.8778	DRALORIC	CGB3216 34,8OHM2% TK	
R246	RL 0,35W 475 OHM+-1%TK50 RESISTOR	RL 083.0390	DRALORIC	SMA0207/475OHM-F-D	
R247	RL 0,35W 100 OHM+-1%TK50 RESISTOR	RL 082.6543	DRALORIC	SMA0207/100/HM-F-D	
R248	RL 0-OHM-WIDERST. 0204 0-OHM RESISTOR	RL 069.0000	DRALORIC	OMA 0204	
R251	RL 0,35W 562 OHM+-1%TK50 RESISTOR	RL 083.0461	DRALORIC	SMA0207/562OHM-F-D	
R252	RL 0,35W 274 OHM+-1%TK50 RESISTOR	RL 083.0178	DRALORIC	SMA0207/274OHM-F-D	
R253	RL 0,35W 200 OHM+-1%TK50 RESISTOR	RL 083.0049	DRALORIC	SMA0207/200OHM-F-D	
R254	RL 0,35W 100 OHM+-1%TK50 RESISTOR	RL 082.6543	DRALORIC	SMA0207/100/HM-F-D	
R255	RG 150 OHM+-1%TK100 1206 RESISTOR CHIP	RG 007.5589	DALE	CRCW1206-10 150R F-T	
R256	RG 150 OHM+-1%TK100 1206 RESISTOR CHIP	RG 007.5589	DALE	CRCW1206-10 150R F-T	
R257	RG 383 OHM+-2%TK200 1206 CHIP RESISTOR	006.9022	DRALORIC	CGB3216 383OHM2% TK	
R258	RG 150 OHM+-1%TK100 1206 RESISTOR CHIP	RG 007.5589	DALE	CRCW1206-10 150R F-T	
R259	RL 0,35W 47,5 OHM+-1%TK50 RESISTOR	RL 082.9507	DRALORIC	SMA0207/47,5OHM-F-D	
R260	RL 0,21W 56,2 OHM+-1%TK50 RESISTOR	RL 092.1280	RESISTA	MK1 56,2OHM 1% TK50	
R261	RG 82,5 OHM+-1%TK100 1206 CHIP RESISTOR	RG 006.8861	DALE	CRCW1206-10 82R5 F-T	
R262	RG 121 OHM+-1%TK100 1206 CHIP RESISTOR	RG 006.8903	DALE	CRCW1206-10 121R F-T	

Kennz. Comp.No.	Benennung Designation	Sachnummer Stock No.	Hersteller Manufacturer	Bezeichnung Designation	enthalten in contained in
R263	RG 1,21KOHM+-1%TK100 1206 CHIP RESISTOR	RG 006.9968	DALE	CRCW1206-10 1K21 F-T	
R264	RG 56,2 OHM+-1%TK100 1206 CHIP RESISTOR	RG 006.8826	DALE	CRCW1206-10 56R2 F-T	
R265	RL 0,35W 1KOHM+-1%TK50 RESISTOR	RL 082.2160	DRALORIC	SMA0207/1K-F-C	
R266	RL 0,35W 100 OHM+-1%TK50 RESISTOR	RL 082.6543	DRALORIC	SMA0207/100/HM-F-D	
R267	RL 0,35W 100 OHM+-1%TK50 RESISTOR	RL 082.6543	DRALORIC	SMA0207/100/HM-F-D	
R268	RL 0,21W 12,1 OHM+-1%TK50 RESISTOR	RL 092.1196	RESISTA	MK1	
R269	RG 178 OHM+-2%TK200 1206 CHIP RESISTOR	006.8949	DRALORIC	CGB3216 178OHM2% TK	
R270	RG 31,6 OHM+-2%TK200 1206 CHIP RESISTOR	006.8761	DRALORIC	CGB3216 31,6OHM2% TK	
R271	RG 178 OHM+-2%TK200 1206 CHIP RESISTOR	006.8949	DRALORIC	CGB3216 178OHM2% TK	
R272	RL 0,21W 56,2 OHM+-1%TK50 RESISTOR	RL 092.1280	RESISTA	MK1 56,2OHM 1% TK50	
R273	RL 0,35W 100 OHM+-1%TK50 RESISTOR	RL 082.6543	DRALORIC	SMA0207/100/HM-F-D	
R274	RL 0,35W 274 OHM+-1%TK50 RESISTOR	RL 083 0178	DRALORIC	SMA0207/274OHM-F-D	
R275	RL 0,21W 12,1 OHM+-1%TK50 RESISTOR	RL 092.1196	RESISTA	MK1	
R276	RG 178 OHM+-2%TK200 1206 CHIP RESISTOR	006.8949	DRALORIC	CGB3216 178OHM2% TK	
R277	RG 31,6 OHM+-2%TK200 1206 CHIP RESISTOR	006.8761	DRALORIC	CGB3216 31,6OHM2% TK	
R278	RG 178 OHM+-2%TK200 1206 CHIP RESISTOR	006 8949	DRALORIC	CGB3216 178OHM2% TK	
R279	RL 0,21W 56,2 OHM+-1%TK50 RESISTOR	RL 092 1280	RESISTA	MK1 56,2OHM 1% TK50	
R280	RL 0,35W 100 OHM+-1%TK50 RESISTOR	RL 082.6543	DRALORIC	SMA0207/100/HM-F-D	
R281	RL 0,35W 100 OHM+-1%TK50 RESISTOR	RL 082.6543	DRALORIC	SMA0207/100/HM-F-D	
R282	RL 0,21W 18 OHM2% UNGEW. RESISTOR	RL 092.5862	RESISTA	MK1 18OHM 2% UNGEW.	
R283	RG 150 OHM+-1%TK100 1206 RESISTOR CHIP	RG 007.5589	DALE	CRCW1206-10 150R F-T	
R284	RL 0,35W 39,2 OHM+-1%TK50 RESISTOR	RL 082.9420	DRALORIC	SMA0207/39,2OHM-F-D	
R285	RG 150 OHM+-1%TK100 1206 RESISTOR CHIP	RG 007.5589	DALE	CRCW1206-10 150R F-T	
R300	RG 1000 OHM+-1%TK100 1206 CHIP RESISTOR	RG 006.7271	DALE	CRCW1206-10 1K F-T	
R305	RG 1000 OHM+-1%TK100 1206 CHIP RESISTOR	RG 006.7271	DALE	CRCW1206-10 1K F-T	
R310	RG 1000 OHM+-1%TK100 1206 CHIP RESISTOR	RG 006.7271	DALE	CRCW1206-10 1K F-T	
R315	RG 1000 OHM+-1%TK100 1206 CHIP RESISTOR	RG 006.7271	DALE	CRCW1206-10 1K F-T	
R461	RL 0,35W 22,1KOHM+-1%TK50 RESISTOR	RL 083.1545	DRALORIC	SMA/207/22,1K-F-C	
U71	BM MD108 MIXER 0.5GHZ MIXER	BM 082.7479	ANZAC	MD108	
U201	BM MD108 MIXER 0.5GHZ MIXER	BM 082.7479	ANZAC	MD108	
V1	AK BFW16A N 40V 150MA TRANSISTOR	AK 010.4644	VALVO	BFW16A	
V21	AK NE85632 N 12V 100MA TRANSISTOR	354.6839	NEC	NE85632	
V22	AE BB620 45/03PF CDI TUNING DIODE	848.5251	SIEMENS	BB620	
V23	AE BB620 45/03PF CDI TUNING DIODE	848.5251	SIEMENS	BB620	
V24	AK BCY59IX N 45V 200MA TRANSISTOR	AK 010.5163	VALVO	BCY59IX	
V35	AE 5082-2800 SCHOTTKY DIODE	AE 012.9066	HEWLETT-P.	5082-2800	
V41	AK BFW16A N 40V 150MA TRANSISTOR	AK 010.4644	VALVO	BFW16A	
V42	AK BFW16A N 40V 150MA TRANSISTOR	AK 010.4644	VALVO	BFW16A	

Kennz. Comp.No.	Benennung Designation	Sachnummer Stock No.	Hersteller Manufacturer	Bezeichnung Designation	enthalten in contained in
V43	AK BCY59IX N 45V 200MA TRANSISTOR	AK 010.5163	VALVO	BCY59IX	
V71	AD 1N4448 75V 0A15 UDI DIODE	AD 012.0700	TEXAS INST	1N4448 GEGURTET	
V72	AD 1N4448 75V 0A15 UDI DIODE	AD 012.0700	TEXAS INST	1N4448 GEGURTET	
V73	AD 1N4448 75V 0A15 UDI DIODE	AD 012.0700	TEXAS INST	1N4448 GEGURTET	
V74	AK BCY59IX N 45V 200MA TRANSISTOR	AK 010.5163	VALVO	BCY59IX	
V75	AD 1N4448 75V 0A15 UDI DIODE	AD 012.0700	TEXAS INST	1N4448 GEGURTET	
V101	AE 5082-2835 SCHOTTKY DIODE	AE 263.8430	HEWLETT-P.	5082-2835	
V102	AE 5082-2835 SCHOTTKY DIODE	AE 263.8430	HEWLETT-P.	5082-2835	
V111	AE 5082-2835 SCHOTTKY DIODE	AE 263.8430	HEWLETT-P.	5082-2835	
V112	AE 5082-2835 SCHOTTKY DIODE	AE 263.8430	HEWLETT-P.	5082-2835	
V113	AK BFW16A N 40V 150MA TRANSISTOR	AK 010.4644	VALVO	BFW16A	
V114	AK BFW16A N 40V 150MA TRANSISTOR	AK 010.4644	VALVO	BFW16A	
V115	AK BFW16A N 40V 150MA TRANSISTOR	AK 010.4644	VALVO	BFW16A	
V151	AK BC327-40 P 45V 800MA TRANSISTOR	303.9518	INTERMETAL	BC327-40	
V152	AD 1N4448 75V 0A15 UDI DIODE	AD 012.0700	TEXAS INST	1N4448 GEGURTET	
V160	AK BC327-40 P 45V 800MA TRANSISTOR	303.9518	INTERMETAL	BC327-40	
V165	AG 1N4007 GL1000V 1A0 RECTIFIER	AG 013.0310	AEG-TELEF	1N4007	
V166	AG 1N4007 GL1000V 1A0 RECTIFIER	AG 013.0310	AEG-TELEF	1N4007	
V167	AG 1N4007 GL1000V 1A0 RECTIFIER	AG 013.0310	AEG-TELEF	1N4007	
V168	AL BDX77 N 80V 8A0 TRANSISTOR	AL 300.6318	VALVO	BDX77	
V171	AK BFW16A N 40V 150MA TRANSISTOR	AK 010.4644	VALVO	BFW16A	
V172 ..175	AE BA244 BER.SCH.DI.UHF DIODE	AE 439.6310	INTERMETAL	BA244	
V176	AK BCY59IX N 45V 200MA TRANSISTOR	AK 010.5163	VALVO	BCY59IX	
V177	AE BA244 BER.SCH.DI.UHF DIODE	AE 439.6310	INTERMETAL	BA244	
V178	AE BA244 BER.SCH.DI.UHF DIODE	AE 439.6310	INTERMETAL	BA244	
V179	AE BA244 BER.SCH.DI.UHF DIODE	AE 439.6310	INTERMETAL	BA244	
V180	AK BFW16A N 40V 150MA TRANSISTOR	AK 010.4644	VALVO	BFW16A	
V201	AD 1N4448 75V 0A15 UDI DIODE	AD 012.0700	TEXAS INST	1N4448 GEGURTET	
V202	AD 1N4448 75V 0A15 UDI DIODE	AD 012.0700	TEXAS INST	1N4448 GEGURTET	
V203	AD 1N4448 75V 0A15 UDI DIODE	AD 012.0700	TEXAS INST	1N4448 GEGURTET	
V205	AK BCY59IX N 45V 200MA TRANSISTOR	AK 010.5163	VALVO	BCY59IX	
V206	AD 1N4448 75V 0A15 UDI DIODE	AD 012.0700	TEXAS INST	1N4448 GEGURTET	
V231	AK 2N5160 P 40V 400MA TRANSISTOR	010.3060	MOTOROLA	2N5160	
V234	AK 2N5160 P 40V 400MA TRANSISTOR	010.3060	MOTOROLA	2N5160	
V235	AK BC337-40 N 45V 800MA TRANSISTOR	303.9524	SIEMENS	BC337-40	
V236	AE 5082-2800 SCHOTTKY DIODE	AE 012.9066	HEWLETT-P.	5082-2800	
V242 ..245	AE BB909B 25/ 3PF CDI TUNING DIODE	AE 092.9600	VALVO	BB909B	
V251	AK BCY59IX N 45V 200MA TRANSISTOR	AK 010.5163	VALVO	BCY59IX	
V252 ..255	AK BFW16A N 40V 150MA TRANSISTOR	AK 010.4644	VALVO	BFW16A	

Kennz. Comp.No.	Benennung Designation	Sachnummer Stock No.	Hersteller Manufacturer	Bezeichnung Designation	enthalten in contained in
V260	AD 1N4448 75V 0A15 UDI DIODE	AD 012.0700	TEXAS INST	1N4448 GEGURTET	
W31	DV HF-KABEL W31 RF CABLE W31	807.8179			
W33	DV HF-KABEL W33 RF CABLE W33	807.8185			
W35	DV HF-KABEL W35 RF CABLE W35	807.8191			
W36	DV HF-KABEL W36 RF CABLE W36	807.8204			
W170	DX KABEL W170 CABLE W70	807.8127			
W511	DV BUCHSENEINHEIT W511 FEMALE CONNECTOR W511	807.8162			
X23	FP STIFTLEISTE 36P.R2,54 PIN CONNECTOR 4-POLIG	FP 242.3600	BINDER	742-5-11-0178-00-36	
X24	FP STIFTLEISTE 36P.R2,54 PIN CONNECTOR 4-POLIG	FP 242.3600	BINDER	742-5-11-0178-00-36	
X30	FP STIFTLEISTE 36P.R2,54 PIN CONNECTOR 4-POLIG	FP 242.3600	BINDER	742-5-11-0178-00-36	
X31	FP KURZSCHLUSSBUCHSE SHORTING PLUG	FP 491.7042	PK	452-70302	
X32	FJ EINBAUWINKELST. SMC ANGLE CONNECTOR	FJ 249.9684	RADIALL	R 112 669	
X34	FJ EINBAUWINKELST. SMC ANGLE CONNECTOR	FJ 249.9684	RADIALL	R 112 669	
X210	FP KURZSCHLUSSBUCHSE SHORTING PLUG	FP 491.7042	PK	452-70302	
X230	FP KURZSCHLUSSBUCHSE SHORTING PLUG	FP 491.7042	PK	452-70302	
X240	FP KURZSCHLUSSBUCHSE SHORTING PLUG	FP 491.7042	PK	452-70302	
X250	FP KURZSCHLUSSBUCHSE SHORTING PLUG	FP 491.7042	PK	452-70302	
X400	FP KURZSCHLUSSBUCHSE SHORTING PLUG	FP 491.7042	PK	452-70302	
X21A	VL WIRE-WRAP PIN WIRE-WRAP PIN	VL 088.4507	BERG	NR. 75 403-001	
X21B	VL WIRE-WRAP PIN WIRE-WRAP PIN	VL 088.4507	BERG	NR. 75 403-001	
X22A	VL WIRE-WRAP PIN WIRE-WRAP PIN	VL 088.4507	BERG	NR. 75 403-001	
X22B	VL WIRE-WRAP PIN WIRE-WRAP PIN	VL 088.4507	BERG	NR. 75 403-001	
X25A	VL WIRE-WRAP PIN WIRE-WRAP PIN	VL 088.4507	BERG	NR. 75 403-001	
X25B	VL WIRE-WRAP PIN WIRE-WRAP PIN	VL 088.4507	BERG	NR. 75 403-001	
X26A	VL WIRE-WRAP PIN WIRE-WRAP PIN	VL 088.4507	BERG	NR. 75 403-001	
X26B	VL WIRE-WRAP PIN WIRE-WRAP PIN	VL 088.4507	BERG	NR. 75 403-001	
X40A	VL WIRE-WRAP PIN WIRE-WRAP PIN	VL 088.4507	BERG	NR. 75 403-001	
X40B	VL WIRE-WRAP PIN WIRE-WRAP PIN	VL 088.4507	BERG	NR. 75 403-001	
X40C	VL WIRE-WRAP PIN WIRE-WRAP PIN	VL 088.4507	BERG	NR. 75 403-001	
					- ENDE -

EXT 10MHz REFERENZ (+10dBm)
EXT 10MHz REFERENCE
RUCKWAND\
REAR PANEL

W511 20
W511 5,6
X32
2,3 u.5
NT/EXT REF
+15V
G
H
V 168
R168 3,5k
R170
R169 10k
N168 OP27
C152 22µ
C161 10n
V151 BC 327-40
R165 4,75k
R166 33,2k
N151A 4558
V171 BFW 16 A
L171
C173
C174 0,68µ
C175
C176
R177 50,2
C178
V172 BA 244
V173 BA 244
V174 BA 244
V175 BA 244
R181 4,75k
V176 BC 559 X
C181 2,2µ
R182 3,92k
C182 2,2µ
L173 220µ
C191 47n
R191 1k
R192 21k
V177 BA 244
V178 BA 244
V179 BA 244
R183 1k
P179
C190 47n
V180 BFW 16 A
L174 0,68µ
C185 1n
C183 5,6
R185 12,1
R184 150
P180
C184 47n
C186 1n
R187 10
C187 1,5n
R186 33,2
N151B 4558
R460 3,32k
R461 22,1k
V160 BC 327 40
C320 .2µ ±10%
+12V
R892 BL3 (R217 2) +5V see Sheet 3
REFERENCE FREQUENCY OSCILLATOR
REF OSC
A 171 2100 T-S 161
R178 1,5k
C180 47n
R179 10k
10MHz
A171
0MHz
...VEN
-OSCILLATOR
TEMPERATUR
TEMPERATUR
N152 TCA 965
R162 4,75k
R163 4,75k
R164 1k
R160 10k
R161 10k
R158 10k
C321 470
C318 10µ
R159 10k
L153 8,2µ
C320 470
C315 2,2µ
N4448
030 BL3
*2 EXT"REF"H"
9 -15V
1,2,3,4 10
17 LOVENC
8 +12V

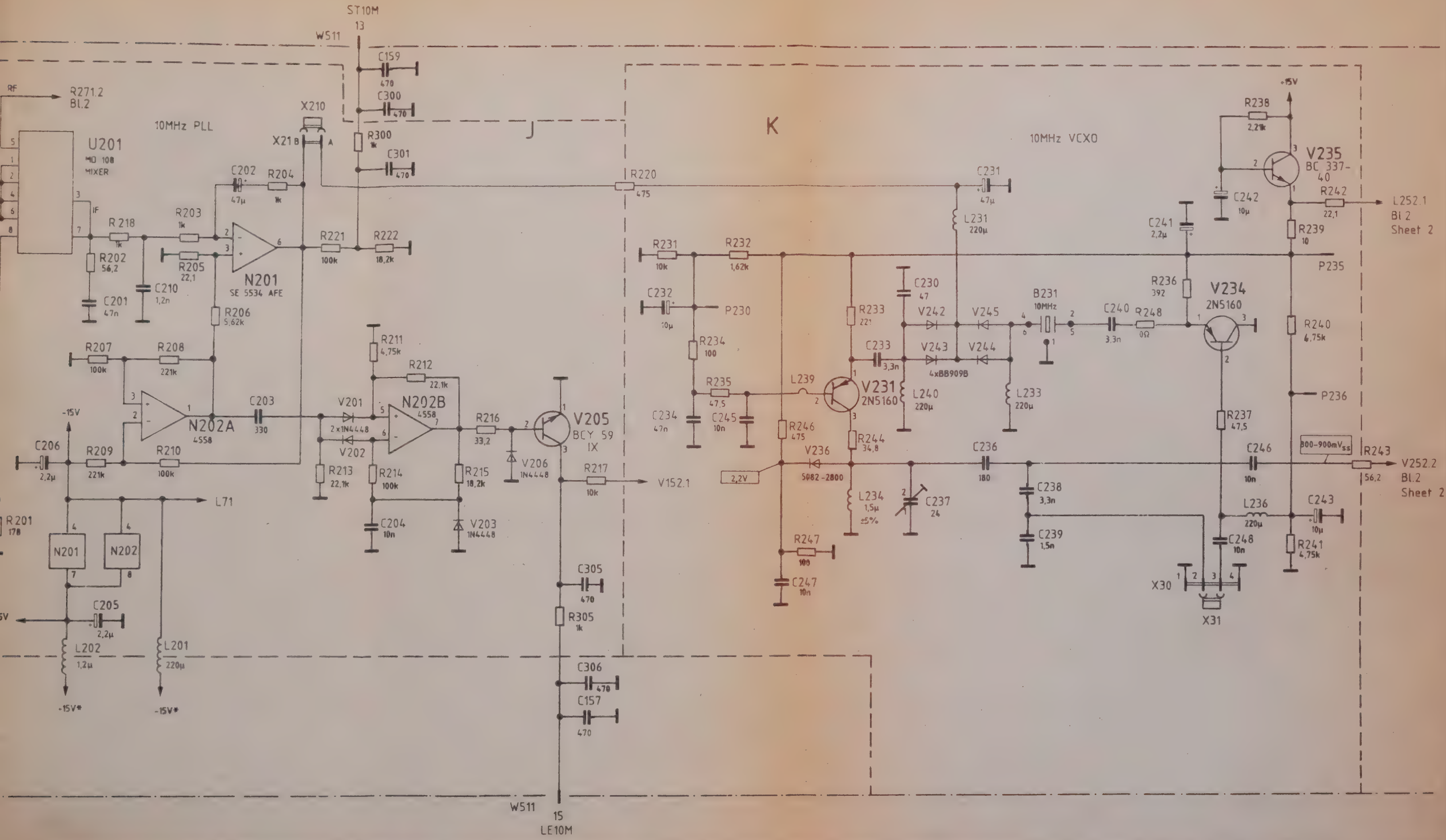

ROHDE & SCHWARZ	A		04.88	Bg					1KGF	Tag	Name	Benennung	REFERENCE 1	Zeichn.-Nr	848. 5000 S
	C	37 086 (2)	04.89	Bg					Bearb	11.87	Bg				Blatt Nr 1
	Änd.	Änderungs-Mitteilung	Datum	Name	Änd.	Änderungs-Mitteilung	Datum	Name	Gepr						v 3 Bl
									Norm			zu Gerät	FSB	neg. v 848. 0020 V	erste Z 848. 1004

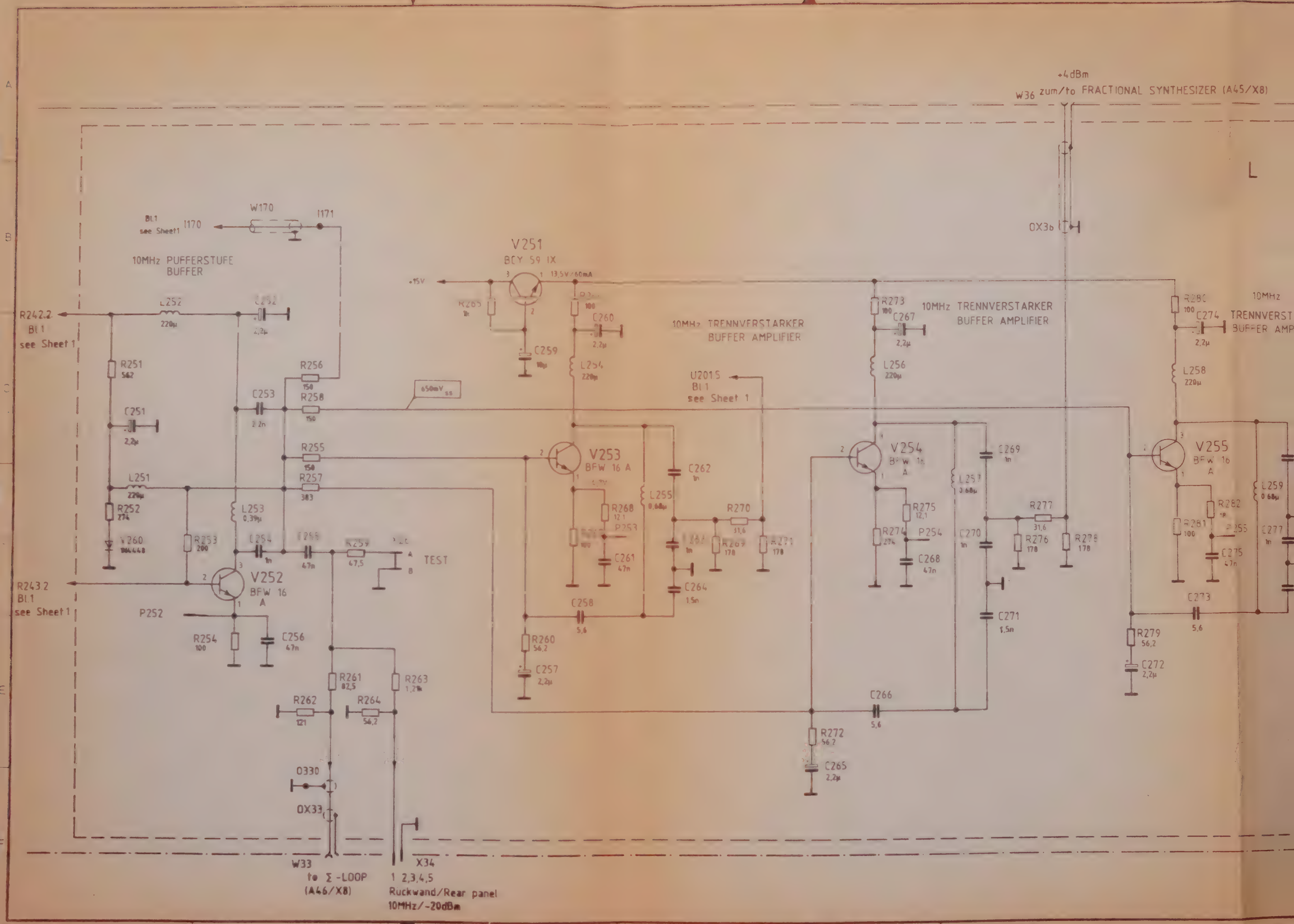

+4dBm
W36 zum/to FRACTIONAL SYNTHESIZER (A45/X8)
L
OX3b
W170
I171
BL1 see Sheet1
I170
10MHz PUFFERSTUFE BUFFER
V251
BCY 59 IX
13,5V/60mA
+15V
R242.2 BL1 see Sheet 1
L252 220µ
C252 2,2µ
R251 562
C251 2,2µ
L251 220µ
R252 274
V260
R253 200
C253 2,2n
R256 150
R258 150
R255 150
R257 383
L253 0,39µ
C254 1n
C255 47n
R259 47,5
TEST
R243.2 BL1 see Sheet 1
V252 BFW 16 A
P252
R254 100
C256 47n
R261 82,5
R263 1,2k
R262 121
R264 56,2
O330
OX33
W33 to Σ-LOOP (A46/X8)
X34
1 2,3,4,5 Ruckwand/Rear panel 10MHz/-20dBm
650mV ss
C259 10µ
C260 2,2µ
L254 220µ
10MHz TRENNVERSTARKER BUFFER AMPLIFIER
U201.5 BL1 see Sheet 1
V253 BFW 16 A
R268 12,1
P253
C261 47n
L255 0,68µ
C262 1n
R270 31,6
C264 1,5n
C258 5,6
R260 56,2
C257 2,2µ
R273 100
C267 2,2µ
L256 220µ
10MHz TRENNVERSTARKER BUFFER AMPLIFIER
V254 BFW 16 A
R275 12,1
R274 274
P254
C268 47n
L257 0,68µ
C269 1n
C270 1n
R277 31,6
R276 178
R278 178
C271 1,5n
C266 5,6
R272 56,2
C265 2,2µ
R280 100
C274 2,2µ
10MHz TRENNVERST BUFFER AMP
L258 220µ
V255 BFW 16 A
R282 18
R281 100
P255
C275 47n
L259 0,68µ
C277 1n
C273 5,6
R279 56,2
C272 2,2µ

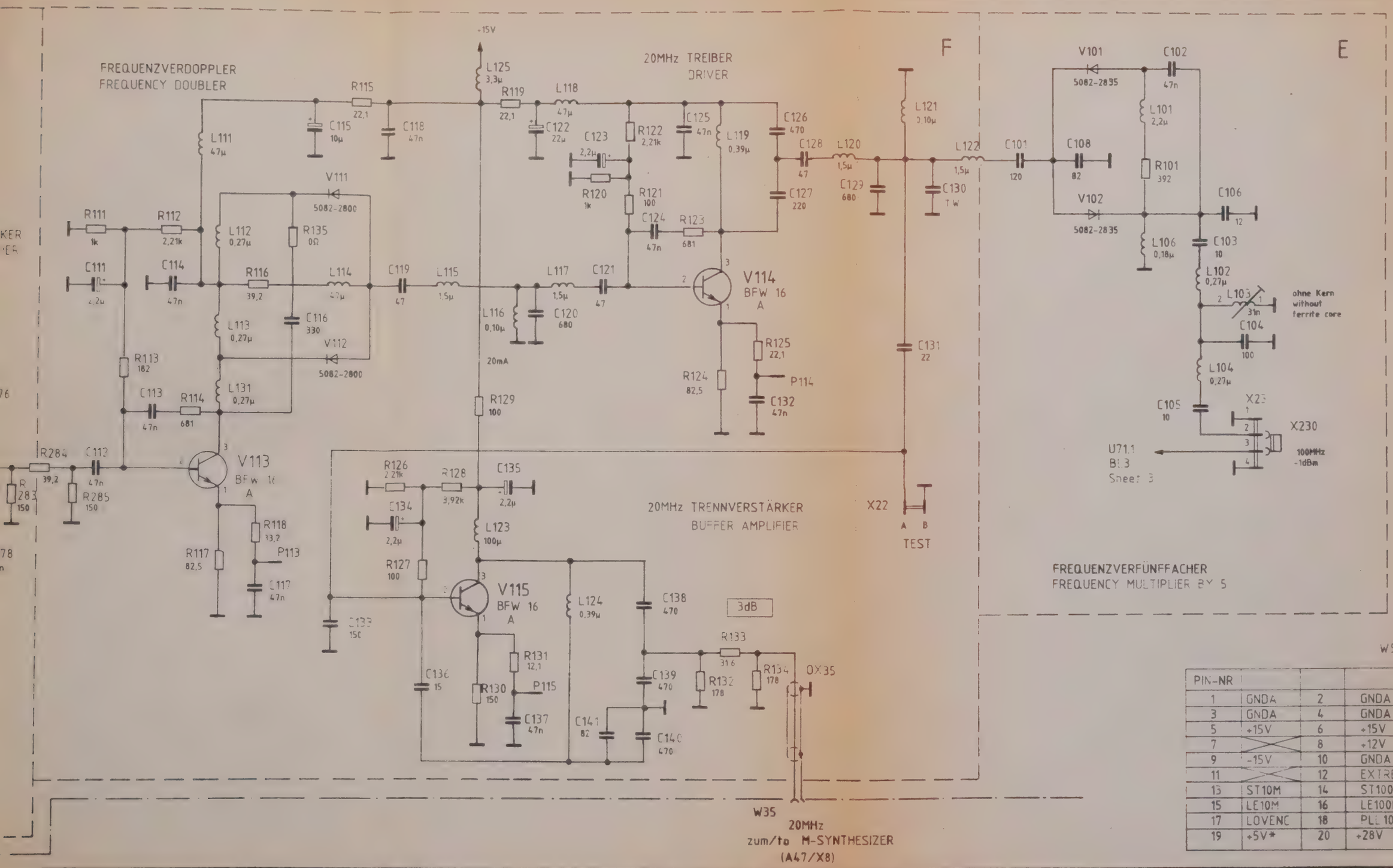

W511

PIN-NR			
1	GNDA	2	GNDA
3	GNDA	4	GNDA
5	+15V	6	+15V
7		8	+12V
9	-15V	10	GNDA
11		12	EXTREF
13	ST10M	14	ST100M
15	LE10M	16	LE100M
17	LOVENC	18	PLL 10M
19	+5V*	20	+28V

ROHDE & SCHWARZ

A		04.88	Bg
C	37 086 (2)	04.89	Bg

1KGF — Name: Bg — M.87

Benennung: REFERENCE 1

FSB

.848. 5000 S

848. 0020 V — 848. 1004

2
3

B

100MHz VCXO

C2

100MHz-
TRENNVERSTÄRKER
BUFFER AMPLIFIER

C1

A

100MHz TRENNVERSTÄRKER
BUFFER AMPLIFIER

V43 BCY 59 IX

V24 BCY 59IX

V41 BFW 16 A

V42 BFW 16 A

V21 NF BS632

V22 BB 620

V23 BB620

V1 BFW 16 A

L38 2,2µH

L39 1,2µH

L60 1,2µH

L21 2,2µ

L30

L32 115nH

L22 0,68µ

L23 2,2µ

L24 270

L42 3,3µ

L43 3,3µ

L44 3,3µ

L45 3,3µ

L46 0,22µ

L1 3,3µ

L2 3,3µ

L3 0,22µ

L10

B21 100MHz

B11 +12V

R21 47,5

R41

R42 100

R43 2,74k

R44 2,21k

R49 56,2

R48 121

R50 121

R51 2,74k

R52 2,21k

R53 100

R54 150

R55 33,2

R56 178

R47 22,1

R46 22

R25 475

R26

R27 27,4

R20 47

R19 1k

R22 475

R30 8Ω

R1 100

R2

R3

R36 33,2

R6 18,7

R5 150

R7 316

R8 17,8

R9 316

C38 1n

C39 10n

C41 2,2µ

C42

C43 2,2µ

C60 1n

C49 220

C47 18

C48 18

C50 220

C51 2,2µ

C52 2,2µ

C53 1,8

C54 220

C55 18

C56 18

C57 220

C46 220

C26 150

C27 220

C35 470

C36 15

C37 47

C30 470

C22 220

C1 2,2µ

C2

C3 220

C6 220

C7 18

C8 18

C5 220

X40

X41

X42

X43

X44

P20

P41

P42

P1

BS14

BX31

W31 100MHz
zur/to REF II (A52/X5)

L31
L32
L103

U71
U201

Draufsicht
Top view

A		04.88	Bg						1KGF	Tag	Name
B	37 074 (44)	03.89	Bg						Bearb	11.87	Bg
C	37 086 (2)	04.89	Bg						Gepr		
	Änderung (Änderungsmitteilung)	Datum	Name	Änderung (Änderungsmitteilung)			Datum	Name	Norm		

ROHDE & SCHWARZ

Zeichn Nr 84? S 813

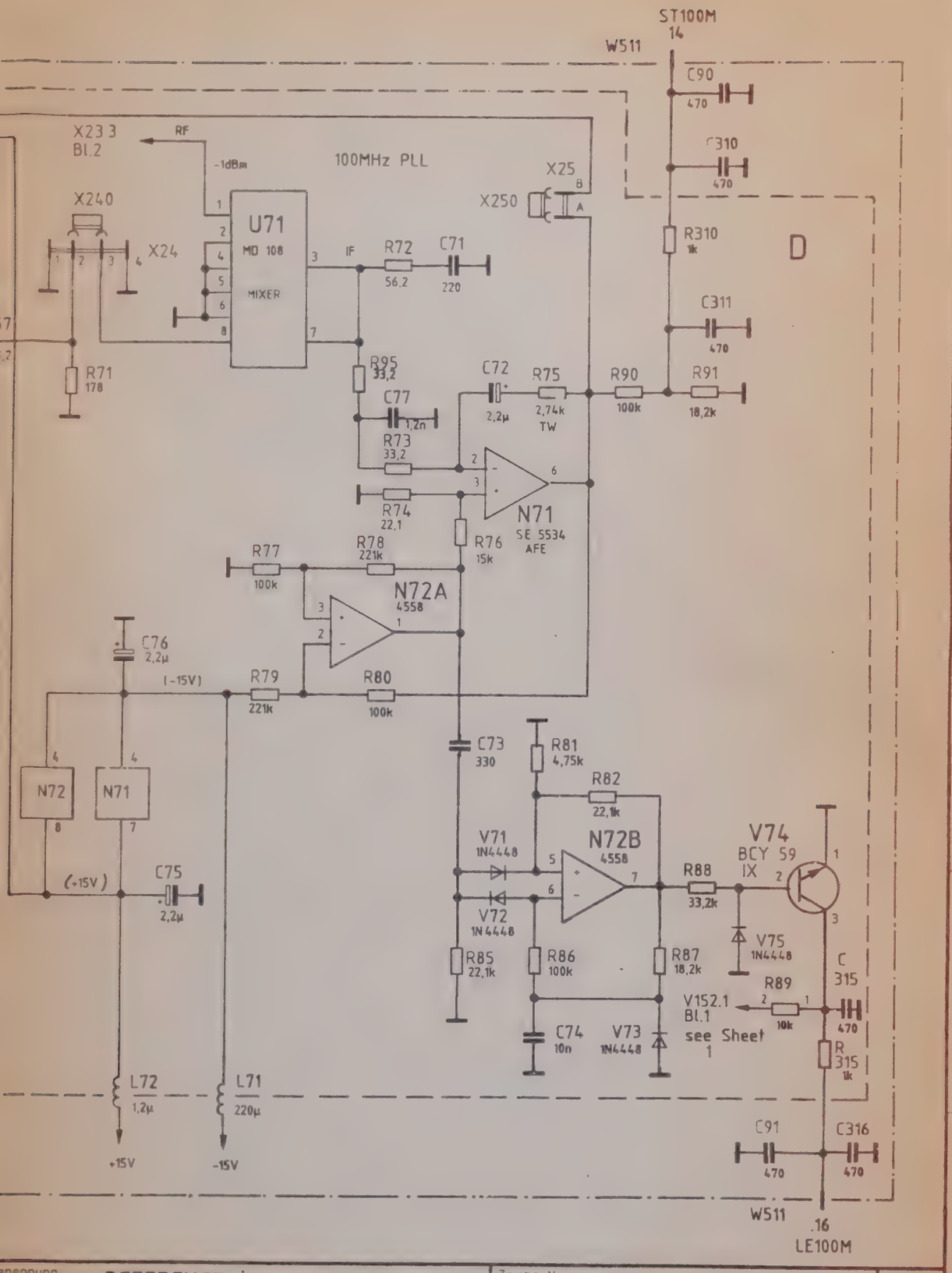

enennung REFERENCE 1	Zeichn.-Nr 848. 5000 S		Blatt-Nr 3 / 3
zu Gerat FSB	reg. Nr 848. 0020 V	erste Z 848. 1004	

8 9 10

Ansicht und Leitungsführung Bauteilseite
View of tracks on component side

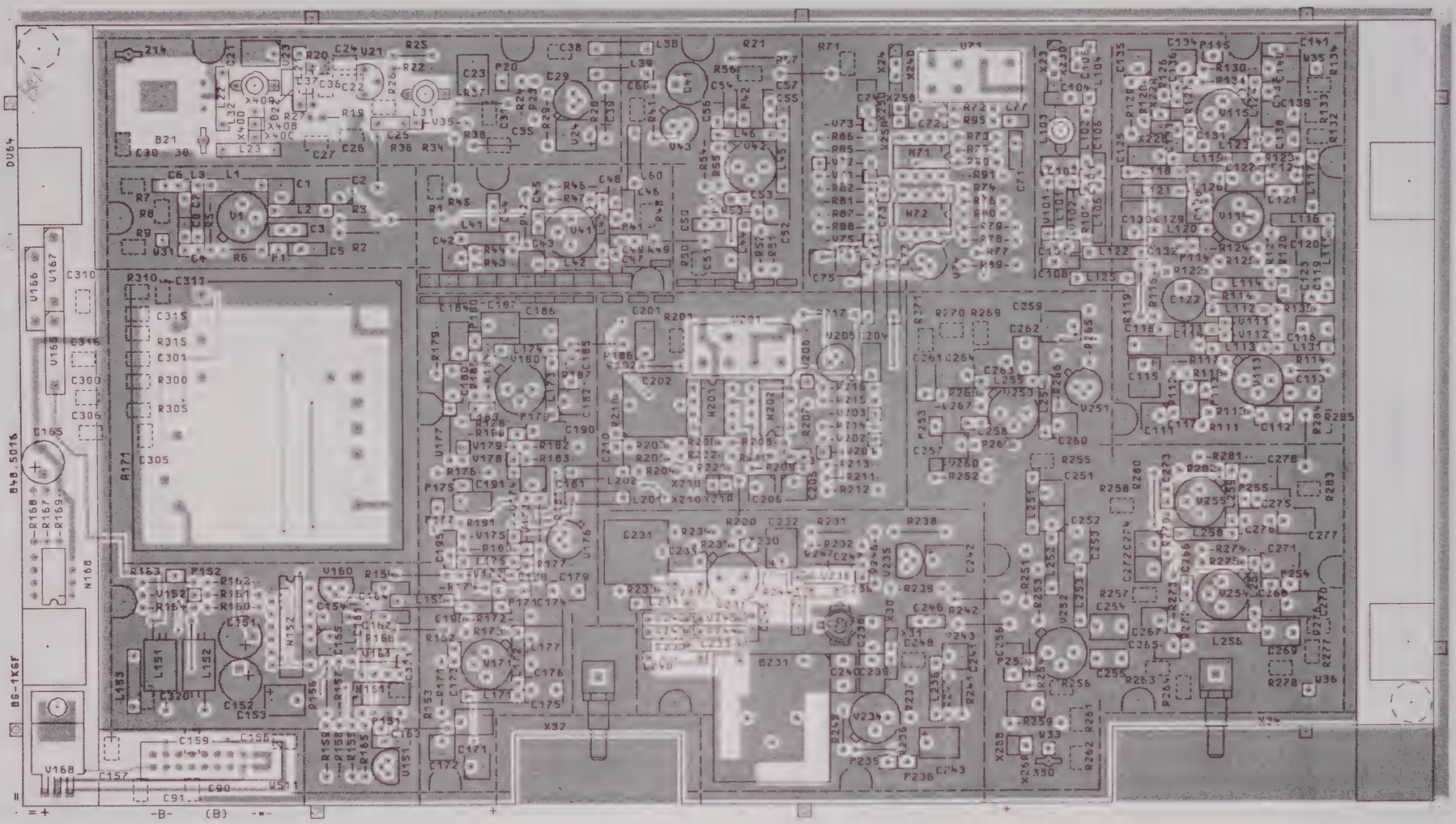

VARIANTENERKLÄRUNG/VERSION
VAR02 – GRUNDAUSFÜHRUNG/BASIC MODEL

ACHTUNG EGB!
Elektrostatisch gefährdete Bauelemente erfordern eine besondere Handhabung
ATTENTION ESD!
Electrostatic sensitive devices require a special handling
(hierzu HVC 250)

B	------ 06.88 BG	Maße ohne Toleranzangabe		Maßstab 1 : 1	
				Halbzeug, Werkstoff	
		1KEF	Tag Name	Benennung	
		Bearb	06.88 BG	REFERENCE 1	Z
		Gepr			
		Norm			
		ROHDE&SCHWARZ		Zeichn.-Nr 848.5000.01 ED	Blatt-Nr 4
					v BI
Änd Zust	Änderungs-Mitteilung	Tag	Name	zu Gerät FSB	reg. V 848.0020 V erste Z 848.1004

Für Ihre Unterlage behalten
Alle Rechte vor

Ansicht und Leitungsführung Lotseite
View of tracks on solder side

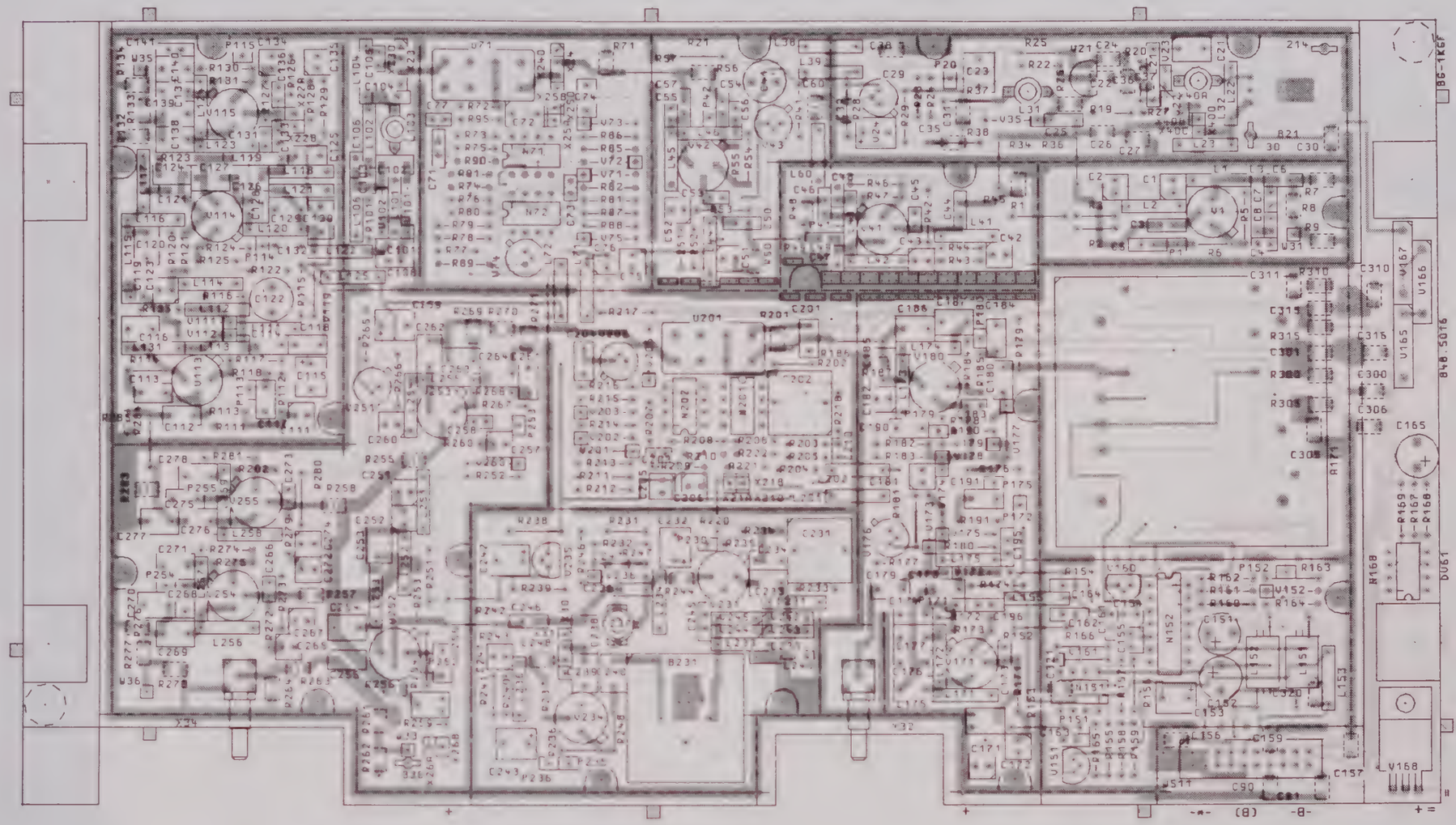

VARIANTENERKLÄRUNG/VERSION
VAR02 – GRUNDAUSFÜHRUNG/BASIC MODEL

ACHTUNG EGB!
Elektrostatisch gefährdete Bauelemente erfordern eine besondere Handhabung
ATTENTION ESD!
Electrostatic sensitive devices require a special handling.

B	06.88 BG	Maße ohne Toleranzangabe		Maßstab 1 : 1	
				Halbzeug, Werkstoff	
		1KEF	Tag / Name	Benennung	
		Bearb	06.88 BG	REFERENCE 1	Z
		Gepr			
		Norm			
		ROHDE&SCHWARZ		Zeichn.-Nr 848.5000.01 ED	Blatt-Nr. 5
Änd. Zust.	Änderungs-Mitteilung	Tag	Name	zu Gerät FSB	reg. V 848.0020 V / erste Z 848.1004

Für diese Unterlage behalten wir alle Rechte vor

ROHDE&SCHWARZ

SERVICE DOCUMENTATION

Frequency Processor

810.3400.02

Contents

		Page
6	**Service Instructions Frequency Processor**	6.1
6.1	**Function Description**	6.1
6.1.1	Bus System	6.1
6.1.2	Memory Modules	6.1
6.1.3	Interrupt Configuration	6.1
6.1.4	Clock Generation	6 1
6.1.5	FIFO Interface	6 2
6.1.6	Address Areas - Component Selection Lines	6 2
6.2	**Testing and Adjustment**	6 5
6.2.1	Checking the CPU Activity	6 5
6.2.2	Resetting the System	6 5
6.2.3	Communication with the Main Processor	6 5
6.2.4	Sweep Control	6.6
6.3	**Troubleshooting**	6.6

Parts lists
Circuit diagrams
Component location plans

6 Service Instructions Frequency Processor

(See circuit diagram 807.6018 S)

6.1 Function Description

The main function of the frequency processor module is to calculate and adjust various sweep parameters of the RF unit.

6.1.1 Bus System

Using the components D4, D5, D6, D7, D3 and D200, the multiplexed address/data bus AD0 to AD15 of the 80186 CPU is divided into an address bus (A0 to A15), a memory data bus (DS0 to DS15) and a peripheral data bus (DP0 to DP15). The peripheral data bus is also linked with modules outside the frequency processor

Interference on the peripheral modules by the frequency processor can be reduced by decoupling the memory and peripheral data buses. For the same reason, separate read signals are generated for the peripherals (LIORD) and memories (MRD) using the components D22B, D23B, D31A/B.

6.1.2 Memory Modules

The memory configuration of the frequency processor has been designed for use of two 8 x 8K static RAMs and 2 x 2 EPROMs of type 27(C)256 or 27(C)128. The High and Low bytes are separated. The maximum capacity of the program memory is therefore 128 Kbyte, that of the data memory 16 Kbyte.

The CS lines of the component selection logic integrated in the 80186 CPU are used to select the memory ICs. Because of the separation of the High and Low bytes with the read/write memories, it is necessary to link the component selection line with the signals A0 and BHE.

6.1.3 Interrupt Configuration

Two interrupt controllers (82C59) are used to handle interrupts and are operated in cascade mode together with the interrupt controllers integrated in the 80186 CPU. A total of 30 interrupt requests can be registered. Since the two external interrupt control components can only operate 16 interrupt requests separately, groups of 8 interrupt lines are combined via gates D34 and D35. The interrupts of these lines cannot therefore be masked individually.

The concept enables (with a number of exceptions) the storage of interrupt requests using a flip-flop on the peripheral module producing the trigger. Processing of the request results in resetting of the flip-flop by a High pulse on the line INTRES. All interrupt lines are provided with pull-up resistors so that the associated interrupt request is not generated if the modules are not inserted.

6.1.4 Clock Generation

The frequency processor provides the clock signal (sweep clock) to trigger measurements (A/D converter) during the sweep. 3604 pulses must be generated during a sweep and routed on to the A/D converter module via the line SWPCLK.

Three timers in the CPU help to generate the sweep clock. In the configuration selected here, the timers are supplied internally with the 7.9288-MHz system clock divided by 4. Timer 0 is used as a predivider, timer 1 as the main divider. Timer 2 counts the SWPCLK pulses and triggers an interrupt when the specified final value has been reached which signals the end of a sweep interval to the CPU. Timer 0 also resets flip-flop D23A at the end of an interval by a negative pulse at output TO0. The main timer (timer 1) is blocked via D22A (Low level at pin 1) as a result of the High level at the inverted output of the flip-flop. (Timer 1 is programmed such that connection TI1 can be used as an enable input.) It is therefore possible to stop clock generation immediately when the programmed final value has been reached and to eliminate the negative effects of the reaction time of a software stop.

The signal of the line PTSTOP (inverted output of D23A), which can be considered as a sweep indicator, can also be used to block clock generation for the sweep synthesizer (external module). Clock generation (following enabling of timers by the CPU) can be initiated externally using the control line SWPTRG at the clock input of flip-flop D23A. A sweep can be started internally by the CPU by a Low pulse at the preset input of D23 which is connected by a control line of the parallel interface. The status of the sweep control can be scanned by the CPU via a parallel port line connected to D22A.1 (High → counting active, Low → counting blocked).

In zero span mode, the concept provides a mode where a clock signal with a constant pulse width (8 µs) and a pulse frequency adjustable between 2 Hz and 10 kHz is transmitted via data line DP0. This signal is generated in the same manner as the sweep clock. The clock source is also the CPU-internal 1.9822 MHz system clock where timer 2 functions as a predivider and timer 1 as the main divider. The output signal is not applied to line SWPCLK but to the peripheral data line DP0 using the analog multiplexer D37.

In order to reduce the line resistance, the component is configured such that all three channels can be used (parallel circuit). With a Low level at the parallel port control line CLKDP0, plug connection X22.A22 is connected to the peripheral data line DP0, and with a High level to clock line of the CPU timer.

6.1.5 FIFO Interface

The FIFO interface to the main processor, which enables data transfer in both directions, mainly comprises two groups of two 4 x 16-bit FIFOs (D17, D18, D19, D20), the associated control logic and a bidirectional data bus driver (D28) on the main processor.

Every FIFO component contains the status lines IR (input ready) and OR (output ready). IR informs the system at the data inputs whether the FIFO memory is full (Low level), i.e. whether all 16 half-bytes are occupied. By scanning this line, the system which is writing can determine whether an overflow is imminent or whether the received system has already fetched part of the message.

The line OR informs the receiving system whether data are ready in the FIFO memory for collection. It becomes High as soon as the first half-byte is present in the FIFO. The OR signal releases an interrupt in both systems. The associated interrupt routine transfers the FIFO data to an intermediate memory and thus enables asynchronous writing in of further data.

6.1.6 Address Areas – Component Selection Lines

Memory addresses

Line	Area (hexadecimal)	IC / module
UMCS	F0000 – FFFFF F8000 – FFFFF	D10, D11 (27(C)256) D10, D11 (27(C)128)
MCS3	B0000 – BFFFF B8000 – BFFFF	D12, D13 (27(C)256) D12, D13 (27(C)128)
MCS2	A0000 – AFFFF	Not used
MCS1	90000 – 9FFFF	Not used
MCS0	80000 – 8FFFF	Not used
LMCS	0 – 4000	D14, D15 (6264LP-15)

Address decoder D9 (HCT138)

Addr (hex.)	CPU-PCS	Dec output	Line	Connector	Connected module
0	0	0	LBSYSY	X22.C7	Ext. peripheral
10	0	1	LBSNO	X22.A19	Ext. peripheral
20	0	2	LBSR2	X22.C19	Ext. peripheral
30	0	3	LBSMO	X22.C20	Ext. peripheral
40	0	4	LBSSUO	X22.C21	Ext. peripheral
50	0	5	–	–	Not used
60	0	6	–	–	Not used
70	0	7	–	–	FIFO

CPU timer registers

Register	Addresses (hexadecimal)		
	Timer 0	Timer 1	Timer 2
Counter register	FF50	FF58	FF60
Maximum value A	FF52	FF5A	FF62
Maximum value B	FF54	FF5C	–
Control register	FF56	FF5E	FF66

Adress decoder D27 (HCT138)

Addr (hex.)	CPU-PCS	Dec output	Line	Connector	Connected module
80	1	0	LBSSWO	X22.C9	Ext. peripheral
90	1	1	LBSSW1	X22.C10	Ext. peripheral
A0	1	2	LBSSW2	X22.A12	Ext. peripheral
B0	1	3	LBSYPT	X21.A22	Ext. peripheral
C0	1	4	–	–	Not used
D0	1	5	LBSTG	X21.A23	Not used
E0	1	6	LBS2IF	X21.C23	Ext. peripheral
F0	1	7	–	–	Not used

Parallel interface

Addr. (hex.)	Register	Direction	IC
180	Channel A	Input	D30
182	Channel B	Input	D30
184	Channel C	Output	D30
186	Control register	–	D30
200	Channel A	Output	D29
202	Channel B	Input	D29
204	Channel C	Output	D29
206	Control register	–	D29

(Both ICs of type 8255 are operated in single input/output mode)

CPU address lines

Addr. (hex.)	CPU-PCS	Line	Connector	Connected module
100	PCS2	LPCS2X	X21.C6	Not used
180	PCS3	PCS3	–	Parallel interface D30
200	PCS4	PCS4	–	Parallel interface D29
280	PCS5	PCS5	–	Interrupt contr. D25
300	PCS6	PCS6	–	Interrupt contr. D26

Interrupts which can be masked individually:

Line	Connector	D25 input
IRO	(FIFO)	0
LEFYSY	X21.A14	1
LEFXX	X21.A15	2
LELYSY	X21.C16	3
LEL2LO	X21 C17	4
LE2IF	X21.C19	5
LELTG2	X21.C20	6

Line	Connector	D26 input
LEFTG2	X21.C21	0
LELTG1	X21.A21	1
LE10M	X22.A15	2
LE100M	X22.A16	3
LEXXX	X22.C16	4
LEFSUO	X22.C17	5
LEFSTO	X22.A18	6

Address of mask register D25: 282hex
Address of mask register D26: 302hex

Interrupts which cannot be masked individually:

The interrupt lines which cannot be masked individually are combined by NAND gates D34 and D35 and trigger interrupt 7 with the respective interrupt controller. Each line can be scanned via the associated parallel interface.

Scan of channel B by D30

Line	Connector	Scan
LELRF	X21.A16	Bit 0
LEXXX	X21.A17	Bit 1
LEF2LO	X21 A18	Bit 2
LEXXX	X22 C13	Bit 3
LEXXX	X22.C12	Bit 4
LEFSWO	X22 C14	Bit 5
LEFNO	X22.C15	Bit 6
LEFMO	X22.A17	Bit 7

Scan of channel A by D30

Line	Connector	Scan
LEXXX	X21.A4	Bit 0
LEA22	X21.A5	Bit 1
LEFAN	X21.A6	Bit 2
LETEMP	X21.A7	Bit 3
LEXXX	X21.A8	Bit 4
LEXXX	X21.A9	Bit 5
LEXXX	X21.A10	Bit 6
LEA21	X21 A11	Bit 7

6.2 Testing and Adjustment

Equipment required:

Logic probe
Oscilloscope

6.2.1 Checking the CPU Activity

The CPU addresses the EPROMs D10 and D11 immediately following the RESET signal (these two start EPROMs must always be inserted) and starts processing the initialization program.

The component selection signals (negative pulses) at D10.20 and D11.20 can be examined to check whether a memory access to these EPROMs has taken place.

6.2.2 Resetting the System

If the program memory or the start EPROMs are not accessed, it is advisable to first ensure correct resetting of the system

The frequency processor receives the reset pulse externally via the signal line RESOUT (plug X22.C29). The positive RESET pulse is applied to the CPU via inverter D33 (D33.17 to D33.3). The CPU generates a RESET signal at pin 57 if the reset procedure has been successful. This positive pulse is available at X21.B8, D29.35, D30.35.

6.2.3 Communication with the Main Processor

Once initialization has been completed, the frequency processor expects commands and associated parameters from the main processor in order to then initiate the corresponding operations. It is therefore advisable to first check the FIFO communication, i.e. determination of bidirectional message transfer, if the expected activities are not observed following initialization of the frequency processor.

The FIFO components D19 and D20 are used for message transfer from the main processor to the frequency processor, and D17 and D18 for the opposite direction. Various status lines of these ICs can be monitored to check whether data transfer is taking place or has taken place.

FIFO status and clock lines (LS224)

LDCK (= load clock input, pin 3)

A half-byte is transferred to the FIFO with the falling edge of the positive load pulse.

UNCK (= unload clock input, pin 15)

A half-byte is transferred out of the FIFO with the rising edge of the positive pulse.

IR (= input ready, pin 2)

A High level at IR signals that the FIFO is ready to accept further data

A Low level is present permanently at IR if the FIFO memory is full (or with a FIFO overflow). IR is also Low for the duration of the load clock (LDCK).

OR (= output ready)

A High level at OR signals that data can be fetched from the FIFO.

A Low level is present permanently at OR if the FIFO memory is empty. IR is also Low for the duration of the load clock (UNCK).

For example, a check of IR can be used to determine whether data transfer is blocked because the receiving system has not fetched the data (permanent Low level). If a system does not reply, this could be identified by a permanent Low level at OR.

6.2.4 Sweep Control

In almost all modes (except a zero span submode) the frequency processor generates the sweep clock (3604 pulses per sweep) using its integrated timer and supplies external modules via the line SWPCLK (plug X21.C13). These pulse packets can be measured to check that the system has been initialized, that commands have been transferred by the main processor and that external sweep triggering has taken place.

The following hardware preconditions must be satisfied before the sweep clock can be present at SWPCLK:

- The D flip-flop D23A must be set so that timer 1 of the CPU is enabled by the High level at D22.1. Setting takes place at the start of each complete sweep by means of an externally generated trigger pulse and at the start of each partial sweep by means of an internally generated switching pulse.

  The external trigger pulse can be measured on the line SWPTRG (plug X22.C2), the internal start pulse at the preset input (D23.4).

- The multiplexer D37 must establish the connection D24.9 - X21.C13 (i.e. control line CLKDPO = Low).

  External modules can no longer be correctly driven if the multiplexer is not in the correct switch position or is faulty since the peripheral data line DPO is connected to the associated data line of the frequency processor system via contacts 12 - 14 and 2 - 15 of D37.

6.3 Troubleshooting

It is advisable to proceed as in Section 6.2.

Faults can then be located rapidly.

ROHDE&SCHWARZ

Schaltteillisten
Stromläufe
Bestückungspläne

Part lists
Circuit diagrams
Components plans

Listes des pièces détachées
Schémas de Circuit
Plans des composants

(R 29500 Bl 2)
895.1000 Bl. 2

Kennz. Comp.No.	Benennung Designation	Sachnummer Stock No.	Hersteller Manufacturer	Bezeichnung Designation	enthalten in contained in
.	ZUGEH.STROML./CIRC.DIAGR. 807.6018 S				
B1	EQ 15,857600MHZ CL30HC43U QUARTZ CRYSTAL UNIT	091.8416			
C1	CC 10NF-20+50%7X8R4000 CAPACITOR	CC 087.7525	VALVO	2222 63051 64051103	
C3 ..36	CC 10NF-20+50%7X8R4000 CAPACITOR	CC 087.7525	VALVO	2222 63051 64051103	
C58	CC 1NF+-10%63V K2000 CERAMIC CAPACITOR	CC 022.0784	VALVO	2222 63051 102	
C70	CE 220UF-10+50%6V 8,7X13 ELEKTROLYTIC CAPACITOR	CE 022.7520	ROEDERST	EK 00 CB 322 B	
C71	CC 100NF+-10%50V5K1200VIE CAPACITOR	CC 084.5350	UNION CARB	CK05BX104K	
C72	CC 100NF+-10%50V5K1200VIE CAPACITOR	CC 084.5350	UNION CARB	CK05BX104K	
C73	CE 220UF-10+50%6V 8,7X13 ELEKTROLYTIC CAPACITOR	CE 022.7520	ROEDERST	EK 00 CB 322 B	
C101	CC 18PF+-2%3X4NP0 CAPACITOR	CC 087.6458	VALVO	2222 678 10189	
C102	CC 18PF+-2%3X4NP0 CAPACITOR	CC 087.6458	VALVO	2222 678 10189	
C200	CC 10NF-20+50%7X8R4000 CAPACITOR	CC 087.7525	VALVO	2222 63051 64051103	
C230	CC 220PF+-2%6X7N750 CAPACITOR	CC 087.6941	VALVO	2222 678 58221	
C250	CC 220PF+-2%6X7N750 CAPACITOR	CC 087.6941	VALVO	2222 678 58221	
C251	CC 220PF+-2%6X7N750 CAPACITOR	CC 087.6941	VALVO	2222 678 58221	
C252	CC 220PF+-2%6X7N750 CAPACITOR	CC 087.6941	VALVO	2222 678 58221	
D1	BC R80186 16B.CPU CPU	BC 393 1211	AMD	R80186	
D3	BL PC74HCT373P 8XD-LATCH OCTAL D-TYPE LATCH	BL 571.3488	VALVO	PC74HCT373P	
D4 ..7	BL PC74HCT245P 8XTRANSC. OCTAL TRANSCEIVER 3 STATE	BL 571.3465	VALVO	PC74HCT245P	
D8	BL PC74HCT11P 3X3IN AND TRIPLE 3 INPUT AND GATE	BL 352.7521	VALVO	PC74HCT11P	
D9	BL PC74HCT138P LINE DEC 1-OF-8 DECODER/DEMUX	BL 571.3459	VALVO	PC74HCT138P	
D10	BC SOFTW.N.BESTUECKUNGSPL SOFTW.TO COMPONENTS PLAN SOFTW. SEE COMPONENTSPLAN	651.6701.90			
D11	BC SOFTW.N.BESTUECKUNGSPL SOFTW.TO COMPONENTS PLAN SOFTW. SEE COMPONENTSPLAN	651.6701.90			
D12	BC SOFTW.N.BESTUECKUNGSPL SOFTW.TO COMPONENTS PLAN SOFTW. SEE COMPONENTSPLAN	651.6701.90			
D13	BC SOFTW.N.BESTUECKUNGSPL SOFTW. TO COMPONENTS PLAN SOFTW. SEE COMPONENTSPLAN	651.6701.90			
D14	BC HM6264LP15 8KX8 SRAM SRAM	BC 344.7410	HITACHI	HM6264LP15	
D15	BC HM6264LP15 8KX8 SRAM SRAM	BC 344.7410	HITACHI	HM6264LP15	
D16	BL MC74HC32N 4X2INP-OR-G QUAD 2-INPUT OR GATE	BL 571.3220	MOTOROLA	MC74HC32N	
D17 ..20	BL SN74LS224N 16X4 FIFO ASYNC.FIFO	807.6218	TEXAS	SN74LS224N	
D21	BL MM74HC02N 4X2IN.NORG QUAD 2-INPUT NOR GATE	BL 571.3142	MOTOROLA	MC74HC02N	
D22	BL PC74HCT02P 4X2IN.NOR QUAD 2-INPUT NOR GATE	BL 571.3407	VALVO	PC74HCT02P	
D23	BL PC74HCT74P 2XD-FF DUAL D-FLIP-FLOP	BL 571.3436	VALVO	PC74HCT74P	
D24	BL PC74HCT244P 8XBUFF.3S OCTAL BUFFER	BL 352.7473	VALVO	PC74HCT244P	
D25	BC MSM82C59A INTERR.CONTR INTERRUPT CONTROLLER	BC 006.9597	OKI	MSM82C59A	
D26	BC MSM82C59A INTERR.CONTR INTERRUPT CONTROLLER	BC 006.9597	OKI	MSM82C59A	

Der diese Unterlage behalten wir ns alle Rechte vor

Kennz. Comp.No.	Benennung Designation	Sachnummer Stock No.	Hersteller Manufacturer	Bezeichnung Designation	enthalten in contained in
D27	BL PC74HCT138P LINE DEC 1-OF-8 DECODER/DEMUX	BL 571.3459	VALVO	PC74HCT138P	
D28	BL PC74HCT245P 8XTRANSC. OCTAL TRANSCEIVER 3 STATE	BL 571.3465	VALVO	PC74HCT245P	
D29	BC MSM82C55A-5RS PROGR.IF PROGR.PERIPH.INTERFACE	BC 006.9616	NEC	D71055C	
D30	BC MSM82C55A-5RS PROGR.IF PROGR.PERIPH.INTERFACE	BC 006.9616	NEC	D71055C	
D31	BL PC74HCT32P 4X2IN.ORG QUUAD 2-INPUT OR GATE	BL 571.3420	VALVO	PC74HCT32P	
D32	BL PC74HCT240P 8XINV.BUF BUFFER	BL 807.6224	VALVO	PC74HCT240P	
D33	BL MM74HC240N 8XINV BUFF 8XINVERTING BUFFER 3-ST.	BL 653.2926	NSC	MM74HC240N	
D34	BL PC74HCT30P 8IN.NANDG NAND GATE	BL 352.7509	VALVO	PC74HCT30P	
D35	BL PC74HCT30P 8IN.NANDG NAND GATE	BL 352.7509	VALVO	PC74HCT30P	
D36	BL PC74HCT244P 8XBUFF.3S OCTAL BUFFER	BL 352.7473	VALVO	PC74HCT244P	
D37	BL PC74HC4053P 3X2CH.MUX ANALOG MULTIPLEXER	BL 807.6247	TEXAS	SN74HC4053N	
D200	BL PC74HCT373P 8XD-LATCH OCTAL D-TYPE LATCH	BL 571.3488	VALVO	PC74HCT373P	
L1	LD UKW-DR.Z=750 OHM 50MHZ CHOKE	LD 026.4578	VALVO	431202036641	
R1	RL 0,35W 1KOHM+-1%TK50 RESISTOR	RL 082.2160	DRALORIC	SMA0207/1K-F-C	
R4	RN 9X4.7KOHM+-2% SIL10 H5 NETWORK	RN 327.0804	BOURNS	4310R-101-472	
R6	RL 0,35W 1KOHM+-1%TK50 RESISTOR	RL 082.2160	DRALORIC	SMA0207/1K-F-C	
R8	RL 0,35W 1KOHM+-1%TK50 RESISTOR	RL 082.2160	DRALORIC	SMA0207/1K-F-C	
R10	RL 0,35W 475 OHM+-1%TK50 RESISTOR	RL 083.0390	DRALORIC	SMA0207/4750HM-F-D	
R11	RL 0,35W 475 OHM+-1%TK50 RESISTOR	RL 083.0390	DRALORIC	SMA0207/4750HM-F-D	
R12	RN 9X4,7KOHM+-2% SIL10 H5 NETWORK	RN 327.0804	BOURNS	4310R-101-472	
R13	RN 9X4.7KOHM+-2% SIL10 H5 NETWORK	RN 327.0804	BOURNS	4310R-101-472	
R14	RL 0,35W 475 OHM+-1%TK50 RESISTOR	RL 083.0390	DRALORIC	SMA0207/4750HM-F-D	
R20	RL 0,35W 1KOHM+-1%TK50 RESISTOR	RL 082.2160	DRALORIC	SMA0207/1K-F-C	
R21	RL 0,35W 1KOHM+-1%TK50 RESISTOR	RL 082.2160	DRALORIC	SMA0207/1K-F-C	
R22	RL 0-OHM-WIDERST. 0204 0-OHM RESISTOR	RL 069.0000	DRALORIC	OMA 0204	
R23	BEMERKUNG / PLEASE NOTE				
R24	RL 0-OHM-WIDERST. 0204 0-OHM RESISTOR	RL 069.0000	DRALORIC	OMA 0204	
R25	BEMERKUNG / PLEASE NOTE				
R26	RL 0-OHM-WIDERST. 0204 0-OHM RESISTOR	RL 069.0000	DRALORIC	OMA 0204	
R27	BEMERKUNG / PLEASE NOTE				
R28	RL 0-OHM-WIDERST. 0204 0-OHM RESISTOR	RL 069.0000	DRALORIC	OMA 0204	
R29	BEMERKUNG / PLEASE NOTE				
R30	RL 0,35W 1KOHM+-1%TK50 RESISTOR	RL 082.2160	DRALORIC	SMA0207/1K-F-C	
R31	RL 0,35W 1KOHM+-1%TK50 RESISTOR	RL 082.2160	DRALORIC	SMA0207/1K-F-C	
R32	RL 0,35W 475 OHM+-1%TK50 RESISTOR	RL 083.0390	DRALORIC	SMA0207/4750HM-F-D	
R33	RL 0,35W 475 OHM+-1%TK50 RESISTOR	RL 083.0390	DRALORIC	SMA0207/4750HM-F-D	
R40 ..44	RL 0,35W 475 OHM+-1%TK50 RESISTOR	RL 083.0390	DRALORIC	SMA0207/4750HM-F-D	
R45	RL 0,35W 1KOHM+-1%TK50 RESISTOR	RL 082.2160	DRALORIC	SMA0207/1K-F-C	
R46	RL 0,35W 475 OHM+-1%TK50 RESISTOR	RL 083.0390	DRALORIC	SMA0207/4750HM-F-D	
R47	RL 0,35W 475 OHM+-1%TK50 RESISTOR	RL 083.0390	DRALORIC	SMA0207/4750HM-F-D	

Kennz. Comp.No.	Benennung Designation	Sachnummer Stock No.	Hersteller Manufacturer	Bezeichnung Designation	enthalten in contained in
R50	RL 0,35W 1KOHM+-1%TK50 RESISTOR	RL 082.2160	DRALORIC	SMA0207/1K-F-C	
R51	RL 0,35W 1KOHM+-1%TK50 RESISTOR	RL 082.2160	DRALORIC	SMA0207/1K-F-C	
R52 ..55	RL 0,35W 475 OHM+-1%TK50 RESISTOR	RL 083.0390	DRALORIC	SMA0207/475OHM-F-D	
R56	RL 0,35W 4,75KOHM+-1%TK50 RESISTOR	RL 083.1097	DRALORIC	SMA0207/4,75K-F-D	
R58	RL 0,35W 4,75KOHM+-1%TK50 RESISTOR	RL 083.1097	DRALORIC	SMA0207/4,75K-F-D	
R60	RN 9X4,7KOHM+-2% SIL10 H5 NETWORK	RN 327.0804	BOURNS	4310R-101-472	
R61	RN 9X4,7KOHM+-2% SIL10 H5 NETWORK	RN 327.0804	BOURNS	4310R-101-472	
R62	RN 9X4,7KOHM+-2% SIL10 H5 NETWORK	RN 327.0804	BOURNS	4310R-101-472	
R63 ..67	RL 0,35W 4,75KOHM+-1%TK50 RESISTOR	RL 083.1097	DRALORIC	SMA0207/4.75K-F-D	
R70 ..73	RL 0,35W 4,75KOHM+-1%TK50 RESISTOR	RL 083.1097	DRALORIC	SMA0207/4.75K-F-D	
R230	RL 0,35W 100 OHM+-1%TK50 METALFILM-RESISTOR	RL 082.6543	DRALORIC	SMA0207/100/HM-F-D	
R250	RL 0,35W 100 OHM+-1%TK50 METALFILM-RESISTOR	RL 082.6543	DRALORIC	SMA0207/100/HM-F-D	
R251	RL 0,35W 100 OHM+-1%TK50 METALFILM-RESISTOR	RL 082.6543	DRALORIC	SMA0207/100/HM-F-D	
R252	RL 0,35W 100 OHM+-1%TK50 METALFILM-RESISTOR	RL 082.6543	DRALORIC	SMA0207/100/HM-F-D	
R290 ..293	RL 0,35W 4,75KOHM+-1%TK50 RESISTOR	RL 083.1097	DRALORIC	SMA0207/4,75K-F-D	
R370	RL 0,35W 475 OHM+-1%TK50 RESISTOR	RL 083.0390	DRALORIC	SMA0207/475OHM-F-D	
R375	RL 0,35W 4,75KOHM+-1%TK50 RESISTOR	RL 083.1097	DRALORIC	SMA0207/4.75K-F-D	
R380	RL 0,35W 475 OHM+-1%TK50 RESISTOR	RL 083.0390	DRALORIC	SMA0207/475OHM-F-D	
R381	RL 0,35W 4,75KOHM+-1%TK50 RESISTOR	RL 083.1097	DRALORIC	SMA0207/4.75K-F-D	
R382	RL 0,35W 4,75KOHM+-1%TK50 RESISTOR	RL 083.1097	DRALORIC	SMA0207/4.75K-F-D	
R383	RL 0,35W 4,75KOHM+-1%TK50 RESISTOR	RL 083.1097	DRALORIC	SMA0207/4.75K-F-D	
V60	AD 1N4448 75V 0A15 UDI DIODE	AD 012.0700	TEXAS INST	1N4448 GEGURTET	
X21	FP IND.STECKERLEISTE 96P MALE MULTIPOINT CONNECTOR	FP 272.9187	PANDUIT	100-096-033/999	
X22	FP IND.STECKERLEISTE 96P MALE MULTIPOINT CONNECTOR	FP 272.9187	PANDUIT	100-096-033/999	
					- ENDE -

Für diese Unterlage behalten wir uns alle Rechte vor

Für die Überlassung dieser Unterlage behalten wir uns alle Rechte vor

X22 A32 B32 C32 A31 B31 C31

X21 A32 B32 C32 A31 B31 C31

L1

C70 220µ C71 100n C72 100n C73 220µ

+5V

R40 475 R41 475 R42 475 R43 475

NMI C5
DRQ 0 B4
DRQ 1 B5
HOLD B2
HLDA B3
LPCS2X C6

D36 74 HCT 244

R45 1k R47 475

ARDY C4

D1

R1 R2 R3 R4

Bl.3 D24.11 D23.1 D22.1 D29.23 Bl.6

C101 18p B1 15.8576MHz C102 18p

D30.35 Bl.6

Bl.3 D24.13 D23.12 D31.1

Bl.2 D14.27 D16.2

Bl.4 D33.5 D33.3 D26.26 D25.26 D26.17 D25.17

TI0 TO0 TI1 TO1 X1 X2 RESET DT/R S2 RD WR BHE RES TEST INT3 INT2 INT1 INT0

AD15 AD14 AD6 AD13 AD5 AD12 AD4 AD11 AD3 AD10 AD2 AD9 AD1 AD8 AD0

D24.7 B.3

D8A D8B D31C D8C D31D

D16.1 D12.20 D10.20 Bl.2

D4 D5 D6 D7 74 HCT 245

DIR E

AD0 AD1 AD2 AD3 AD4 AD5 AD6 AD7 AD8 AD9 AD10 AD11 AD12 AD13 AD14 AD15

DP1 DP2 DP3 DP4 DP5 DP6 DP7 DP8 DP9 DP10 DP11 DP12 DP13 DP14 DP15

DS0 DS1 DS2 DS3 DS4 DS5 DS6 DS7 DS8 DS9 DS10 DS11 DS12 DS13 DS14 DS15

AD0....AD15

DS0...D

Zeichn.-Nr. 807... S Bl.1

LBSSU0 LBSMO LBSR2 LBSNO LBS YSY LBS XXX LBS ZIF LBS TG LSB XXX LSB YPT LSB SW2 LSB SW1 LSB SW0

C21 C20 C19 A19 X21 C7 C22 C23 A23 X 22 C18 X 21 A22 X 22 A12 C10 C9

AP1 AP2 AP3

A9 A10 A11

DP15 DP14 DP13 DP12 DP11 DP10 DP9 DP8

C29 A29 C28 A28 C27 A27 C26 A26

DP7 DP6 DP5 DP4 DP3 DP2 DP1

C25 A25 C24 A24 C23 A23 C22

X 22

D30 2
B. 3

DP1 ..DP7

D9
74 HCT 138

A4 A5 A6

EN2B EN2A EN*

Y7 Y6 Y5 Y4 Y3 Y2 Y1 Y0

D21 5
B. 5

R9 1k +5V

D27
74 HCT 138

A4 A5 A6

EN2B EN2A EN*

R8 1k +5V

D24B
74 HCT 244

OE

A0 A1 A2 A3

Y0 Y1 Y2 Y3

R11 47R

D20 5
B. 3

A0 .. A15

AD0 .. AD15

R10 47R

OE E

AD8 AD9 AD10 AD11 AD12 AD13 AD14 AD15

D3
74 HCT 373

A8 A9 A10 A11 A12 A13 A14 A15

R13 8x4.7k +5V

DP0'

D37 2+ 12
B. 3

R12 8x4.7k +5V

D11 47R

OE E

AD0 AD1 AD2 AD3 AD4 AD5 AD6 AD7

D200
74 HCT 373

A0 A1 A2 A3 A4 A5 A6 A7

D18 4
B. 2

+5V C3,C4 C5 C6,C7,C24, C36,C200 8x10n

+5V C9 C27 2x10n

D9 D27

D3 D4 D5 D6 D7 D24 D36 D200

+5V C' 10n

D'

+5V C8 C37 2x10n

D8 D37

A0 .. A15

AD0 .. AD15

BUS-SYSTEM

K	37 166 (23)	10.89	Bg	D	30 745 61	01 86	Bg	Y DF	Tag	Name	Benennung FREQUENCY-PROCESSOR
					30 745 61	01 86	Bg	Board	06 85	BG	
					30 745 61	11 87	Bg	Dept			Dezimal-Nr. 807. 6018 S
								Norm			

ROHDE & SCHWARZ

zu Gerät FSA

Typ 807 601 . Ausg 3 BTC 3410

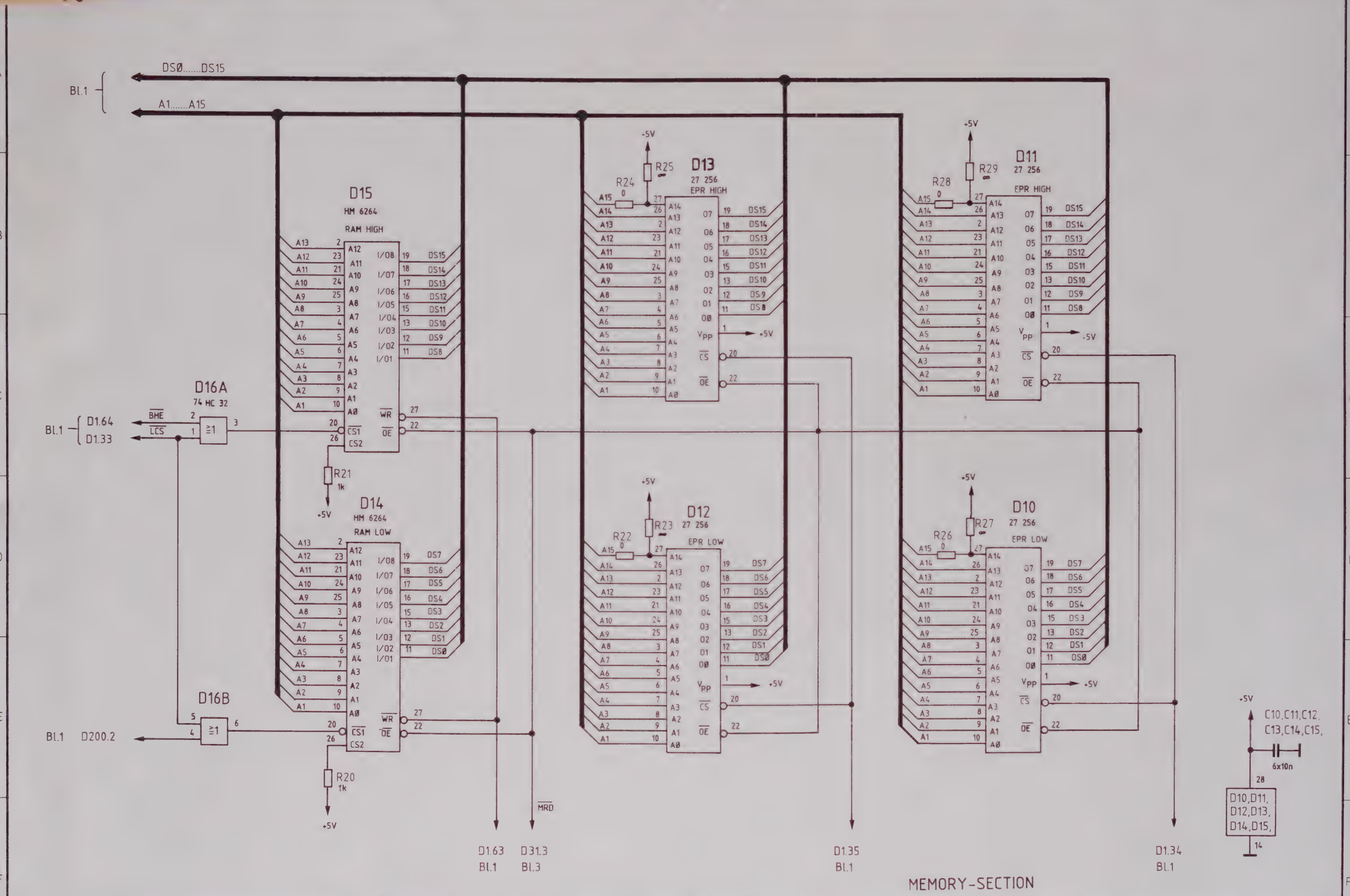

MEMORY-SECTION

ROHDE&SCHWARZ	A		08.85	BG	H	32 745 (83)	01.87	Bq	1KGF	Tag	Name
	B	32 745 (22)	02.86	BG					Bearb	06.85	BG
	C	32 745 (28)	03.86	BG					Gepr		
	And Zust	Änderungs-Mitteilung	Datum	Name	And Zust	Änderungs-Mitteilung	Datum	Name	Norm		

Benennung: FREQUENCY-PROCESSOR

zu Gerät: FSA

Zeichn.-Nr: 807. 6018 S

reg. i. V.: 806. 4011 V

erste Z.: 810. 3400

Blatt-Nr: 2

v. 6 Bl.

Für diese Unterlage behalten wir alle Rechte vor

Für diese Unterlage behalten wir alle Rechte vor

SWPTRG C2 X21

PTSTOP A13 X22

LIORD B6 X21

DT/FP B7 X21

SWPCLK C13

D1.64 Bl.1

D1.22 Bl.1

D1.54 Bl.1

D1.21 Bl.1

D1.62 Bl.1

+5V

R 30 1k

D22B 74 HCT 02

D23B 74 HCT 74

R31 1k

+5V

D31B 74 HCT 32

D31A

RD → D29.5 Bl.6, D16.13 Bl.5, D25.3 Bl.4

MRD → D10.22 Bl.2

D29.16 Bl.6

D23A

D22A

C230 220

R230 100

R380 475

DPØ'

D29.14 Bl.6

R12.2 D4.18 Bl.1

D30.34 D29.34 Bl.6

D37 74 HC 4053

CLKDPØ

DPØ

R370 475

R375 4,7k

+5V

D24A 74 HCT 244

R32 475

R33 475

Bl.1 — D1.63, D1.40, D1.20

D21.6 Bl.5

D30.36 Bl.6

D29.36

D4.1 Bl.1

+5V

C22,C23 2x10n

+5V

D22 D23

D37

X22 A20 LWR

X22 A22 DPØ

A		08.85	BG	G	32 745(70)	11.86	Bg	1KGF	Tag	Name	
B	32 745 (22)	02.86	BG	H	32 745 (83)	01.87	Bg	Bearb	06.85	BG	
C	32 745 (28)	03.86	BG					Gepr			
Änd Zust	Änderungs-Mitteilung	Datum	Name	Änd Zust	Änderungs Mitteilung	Datum	Name	Norm			

ROHDE&SCHWARZ

Benennung: FREQUENCY-PROCESSOR

zu Gerat FSA

Zeichn -Nr: 807. 6018 S

reg i V 806. 4011 V erste Z 810. 3400

Blatt-Nr 3 v 6 Bl

Ansicht und Leitungsfuhrung Bauteilseite
View of tracks on component side

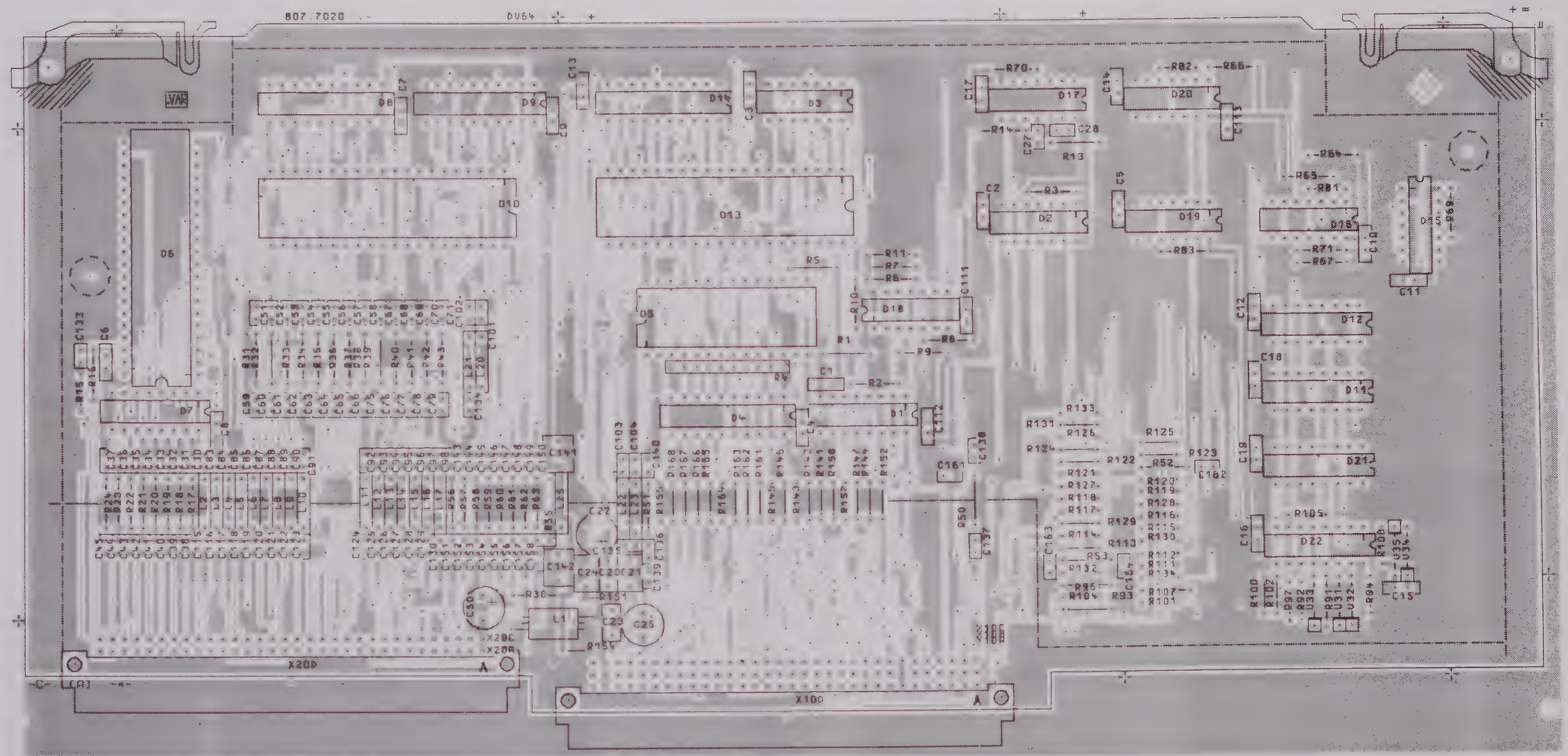

VARIANTENERKLÄRUNG/VERSION
VAR 02 – GRUNDAUSFÜHRUNG/BASIC MODEL

C 32745 05.87 HW	Maße ohne Toleranzangabe	Maßstab 1 : 1	
		Halbzeug, Werkstoff	
	1KGF Tag Name	Benennung	
	Searb 05.87 HW	INTERFACE	Z
	Gepr		
	Norm		
Änd Zust Änderungs-Mitteilung Tag Name	ROHDE&SCHWARZ	Zeichn.-Nr 807.7014.01 EE	Blatt-Nr 2
	zu Gerat FSA	reg i V 806.4011 V erste Z	v Bl

ACHTUNG EGB!
Elektrostatisch gefahrdete Bauelemente erfordern eine besondere Handhabung
ATTENTION ESD!
Electrostatic sensitive devices require a special handling

(hierzu HVL-250)

Für diese Unterlage behalten wir alle Rechte vor

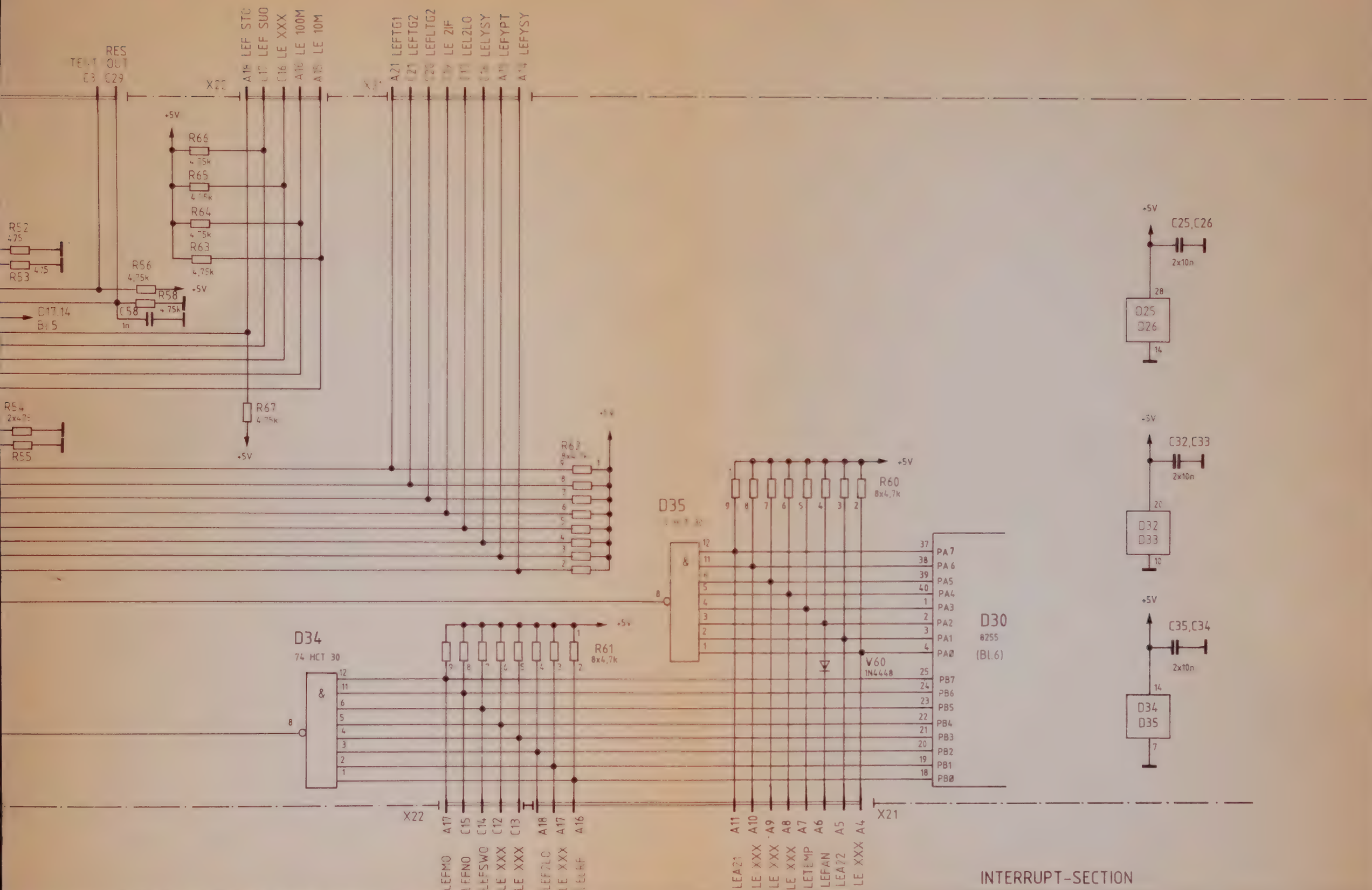

INTERRUPT-SECTION

DE&SCHWARZ	I	32 766 (5)	09.87	Pf	F	32745(55)	10.86	BG	1KGF	Tag	Name
	C	32 745 (28)	03.86	BG	G	32745(74)	12 86	BG	Bearb	06 85	BG
	Änd. Zust.	Änderungs-Mitteilung	Datum	Name	H	32 745 (83)	01 87	BG	Gepr		
					Änd. Zust.	Änderungs-Mitteilung	Datum	Name	Norm		

Benennung: FREQUENCY-PROCESSOR

zu Gerät: FSA

Zeichn.-Nr.: 807. 6018 S

reg. i. V.: 806.4011 V

erste Z.: 810. 3400

Blatt-Nr.: 4

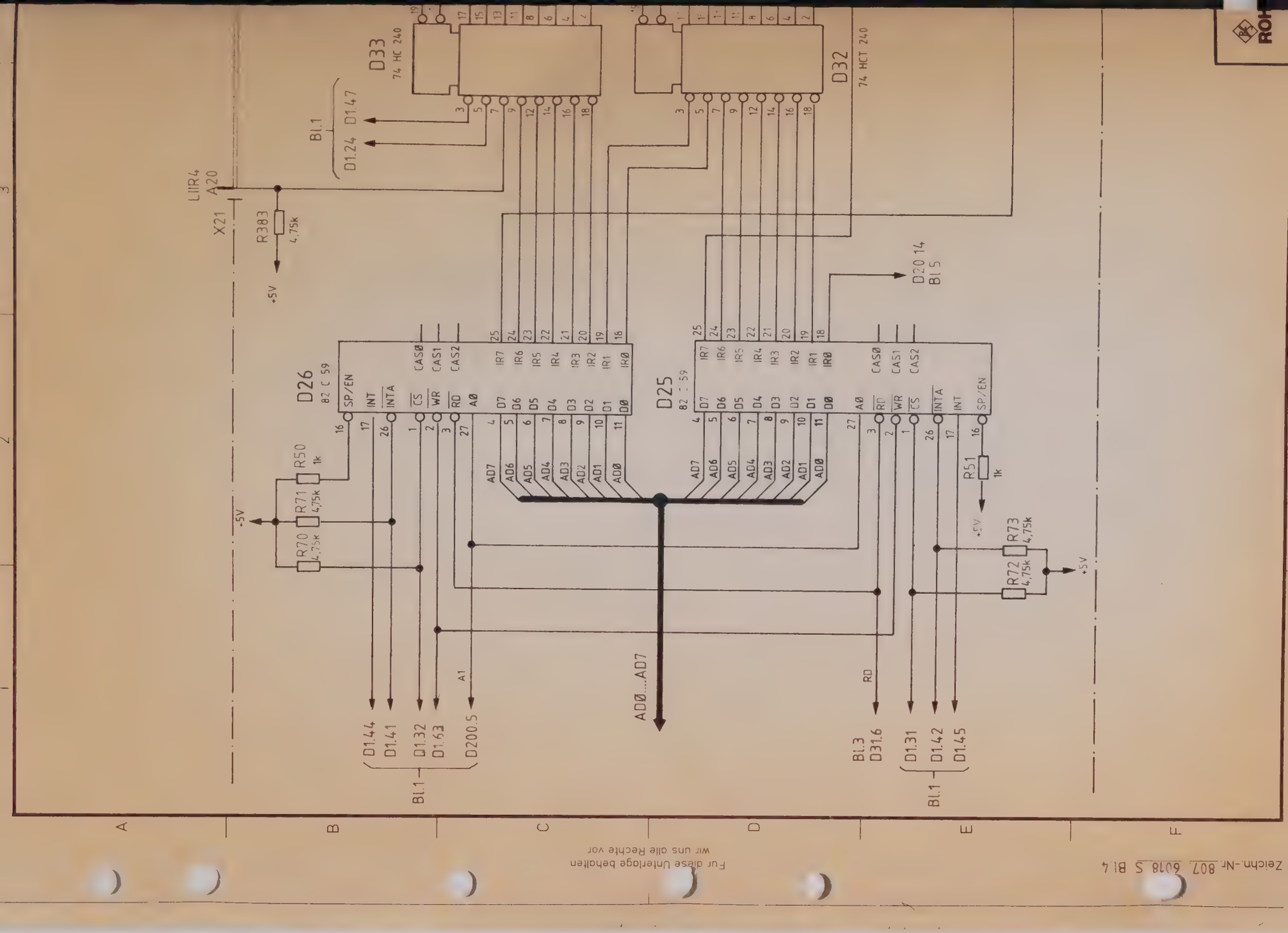

Für diese Unterlage behalten
wir uns alle Rechte vor

Für diese Unterlage behalten
alle Rechte vor

LBS1 C18
LRDH C24
X21

C251 220
R251 100
R250 100
C250 220

D21A 74 HC 02
D16C 74 HC 32

D29.17 Bl.6
FIFO CLR

D17 74 LS 224
D29.18 Bl.6
D33.13 Bl.4

D18 74 LS 224

D19 74 LS 224

D20 74 LS 224

D7 D6 D5 D4 → DP7 DP6 DP5 DP4
D3 D2 D1 D0 → DP3 DP2 DP1 DP0

DP1 .....DP7
DP0*

D21B
D24.5 Bl.3 LWR
D9.7 Bl.1

PCS0-7

D21D
D16D
RD → D31.6 Bl.3

D21C
C252 220
R252 100

D28 74 HCT 245
DIR
E

D25.18 Bl.4

X21 A19 A29 C28 A28 C27 A27 C26 A26 C25
LDTH DH7 DH6 DH5 DH4 DH3 DH2 DH1 DH0

A24 FIF0
A25 LWRH

+5V C17,C18, C19,C20 4x10n
D17,D18, D19,D20

+5V C16,C21 2x10n
D16 D21

+5V C28 10n
D28

FIFO-INTERFACE

ROHDE&SCHWARZ	A		08.85	BG	H	32 745 (83)	01.87	Bg	1KGF	Tag	Name	Benennung FREQUENCY-PROCESSOR	Zeichn.-Nr. 807. 6018 S	Blatt-Nr 5
	B	32 745 (22)	02.86	BG					Bearb	06.85	BG			v 6 Bl
	C	32 745 (28)	03.86	BG					Gepr					
	Änd Zust	Änderungs-Mitteilung	Datum	Name	Änd Zust	Änderungs-Mitteilung	Datum	Name	Norm			zu Gerat FSA	reg i V 806. 4011 V erste Z 810. 3400	

Für diese Unterlage behalten
wir alle Rechte vor

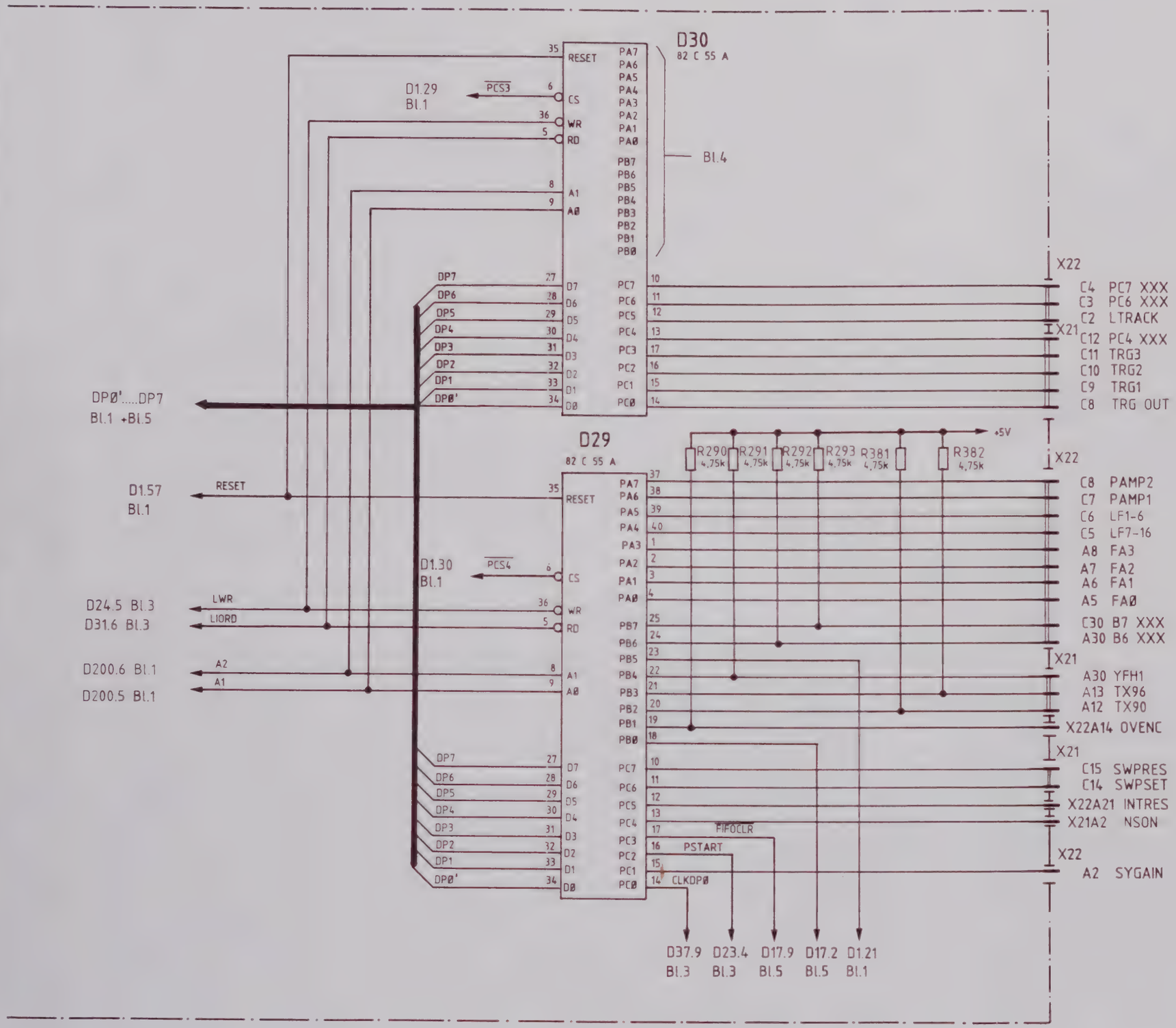

PARALLEL-INTERFACE

A		08.85	BG	H	32 745(83)	01.87	Bg	1KGF	Tag	Name	Benennung FREQUENCY-PROCESSOR	Zeichn.-Nr 807. 6018 S	Blatt-Nr 6
B	32 745 (22)	02.86	BG					Bearb	06.85	BG			v 6 Bl
C	32 745 (28)	03.86	BG					Gepr					
And Zust	Änderungs-Mitteilung	Datum	Name	And Zust	Änderungs-Mitteilung	Datum	Name	Norm			zu Gerat FSA	reg. i V. 806. 4011 V	erste Z. 810. 3400

ROHDE&SCHWARZ

Ansicht und Leitungsführung Bauteilseite
View of tracks on component side

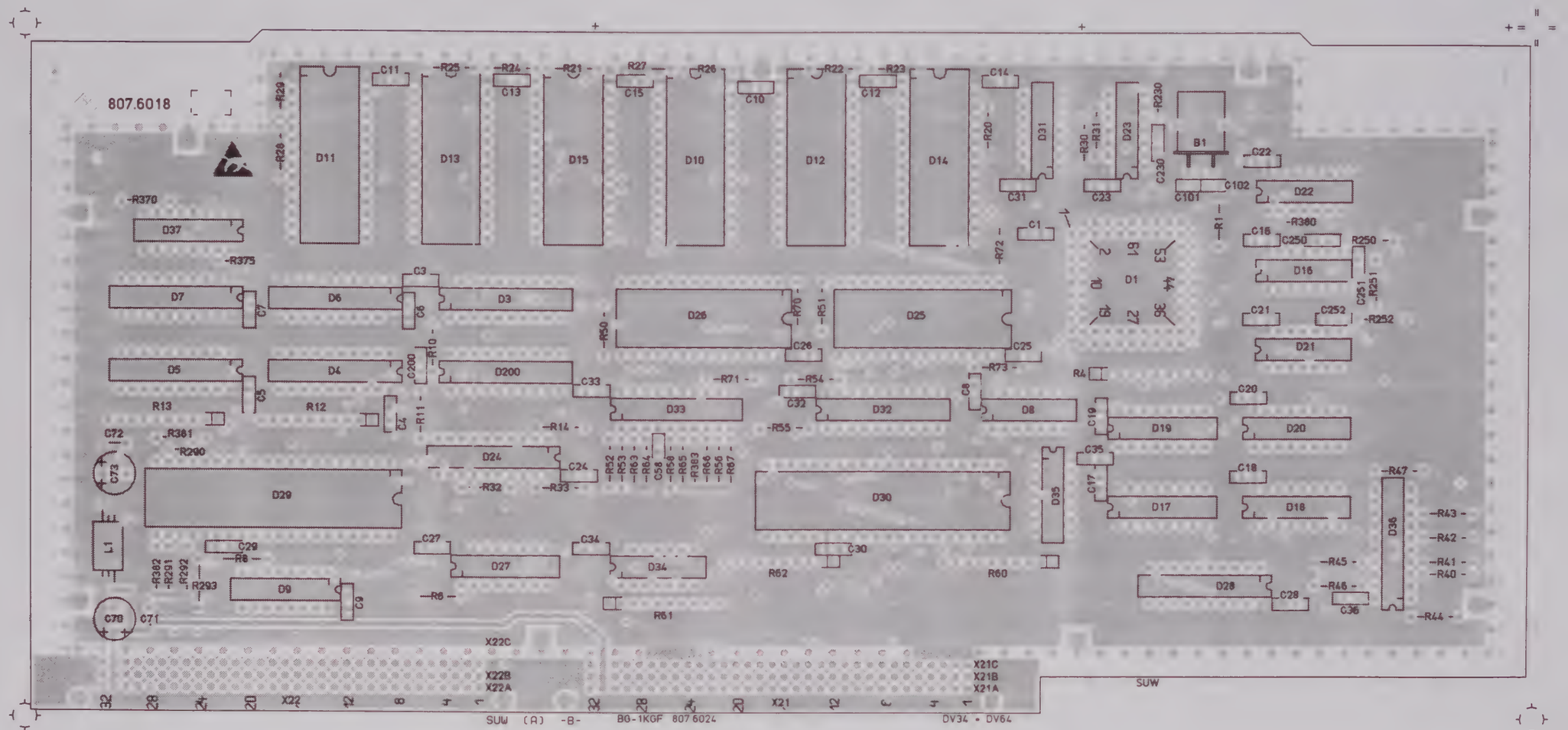

DV43

VARIANTENERKLÄRUNG / VERSION
VAR 02 – GRUNDAUSFÜHRUNG / BASIC MODEL

ACHTUNG EGB!
Elektrostatisch gefährdete Bauelemente erfordern eine besondere Handhabung
ATTENTION ESD!
Electrostatic sensitive devices require a special handling

H 32745(83) 01.87 BG	Maße ohne Toleranzangabe	Maßstab 1 : 1	
	1KGF Name	Benennung	
	0187 BG	FREQUENCY PROCESSOR	Z
	ROHDE & SCHWARZ	Zeichn.-Nr. 807.6018.01 EE	Blatt-Nr. 3
Änd. Zust. Änderungs-Mitteilung Name	zu Gerät FSA	Ers. f. 806.4011 V Ersetzt d.	

Für diese Unterlage behalten wir alle Rechte vor

Ansicht und Leitungsführung Lötseite
View of tracks on solder side

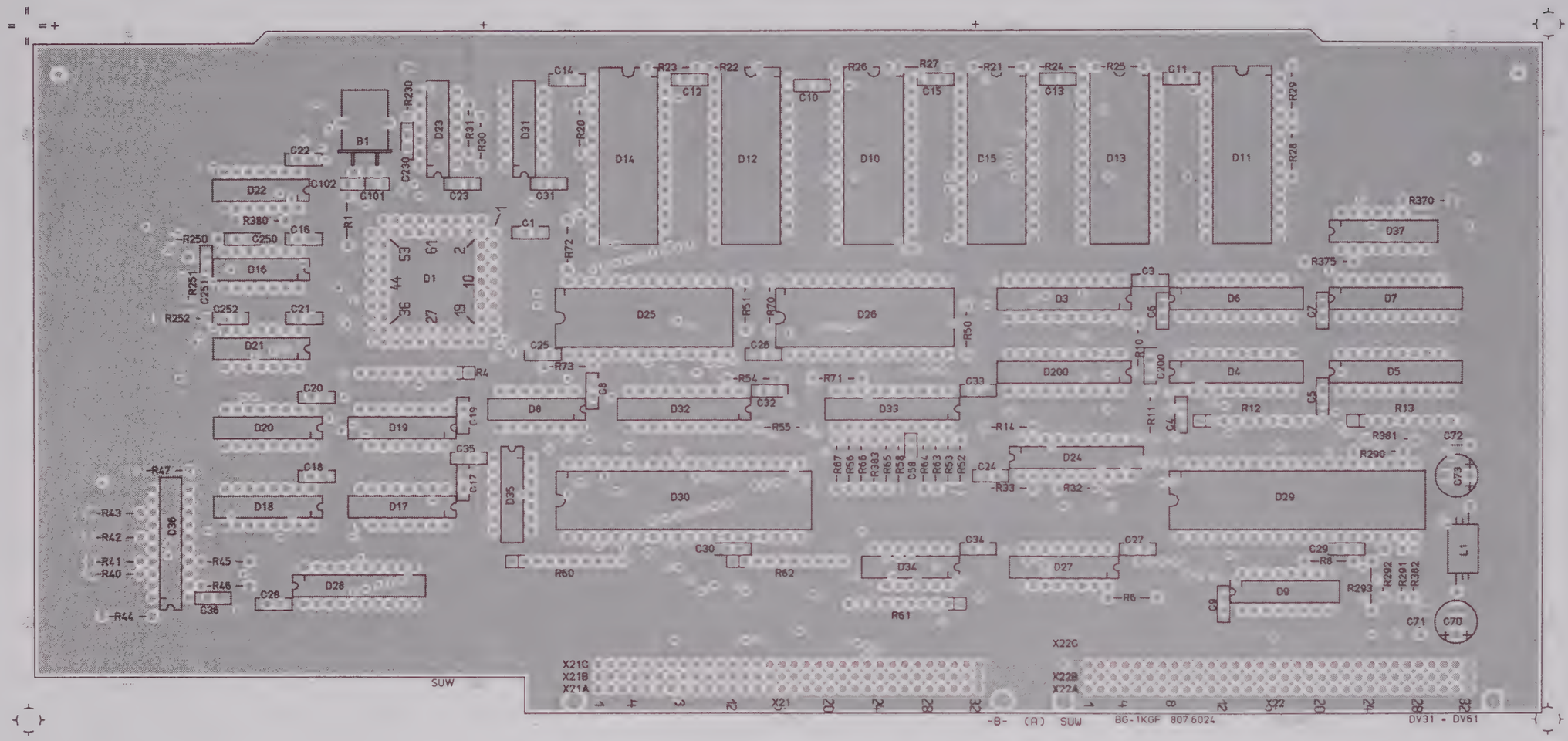

DV 13

VARIANTENERKLÄRUNG / VERSION
VAR 02 – GRUNDAUSFÜHRUNG / BASIC MODEL

H	32745 (83)	01.87	BG	Maße ohne Toleranzangabe		Maßstab 1 : 1	
						Halbzeug, Werkstoff	
				1KGF	Tag / Name	Benennung	
				Bearb	01.87 / BG	FREQUENCY PROCESSOR	Z
				Gepr			
				Norm			
And	Änderungs-Mitteilung	Tag	Name	ROHDE & SCHWARZ		Zeichn -Nr 807.6018.01 EE	Blatt-Nr 4 v. Bl
				zu Gerat FSA		reg i V 806.4011 V erste Z	

ACHTUNG EGB!
Elektrostatisch gefährdete Bauelemente erfordern eine besondere Handhabung.
ATTENTION ESD!
Electrostatic sensitive devices require a special handling.
(hierzu HVC 250)

Für diese Unterlage behalten wir uns alle Rechte vor.

Ansicht und Leitungsführung Lötseite
View of tracks on solder side

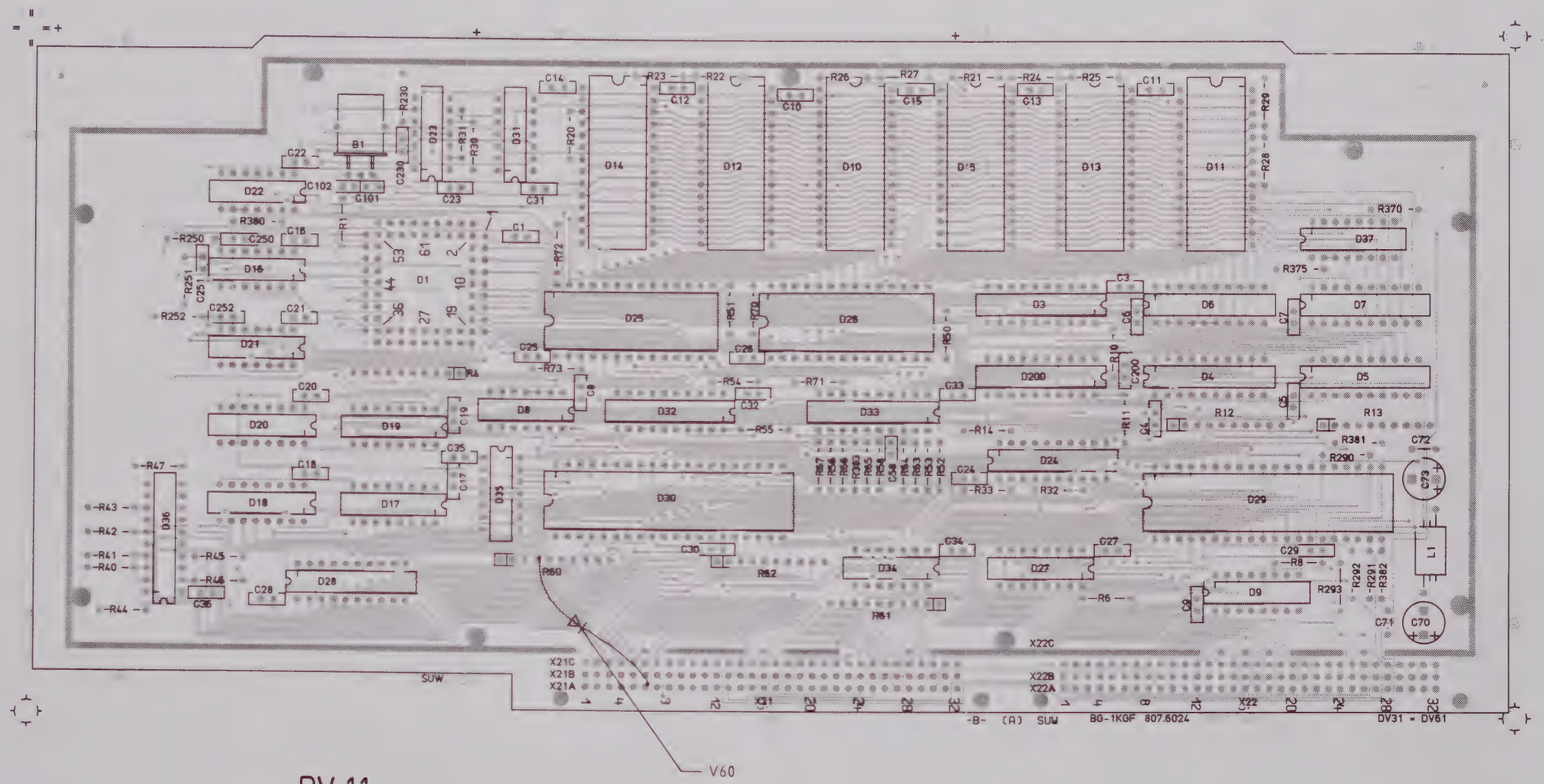

DV 11

VARIANTENERKLÄRUNG/VERSION
VAR 02 – GRUNDAUSFÜHRUNG/BASIC MODEL

H 32745(83)	01.87 BG	Maße ohne Toleranzangabe		Maßstab 1 : 1		
K 32 766 (5)	09.87 Pf			Halbzeug, Werkstoff		
		1KGF	Tag	Name	Benennung	
		Bearb	01.87	BG	FREQUENCY PROCESSOR	Z
		Gepr.				
		Norm				
		ROHDE&SCHWARZ			Zeichn-Nr 807.6018.01 EE	Blatt-Nr 5
And. Zust.	Änderungs-Mitteilung	Tag	Name	zu Gerät FSA	reg. i. V. 806.4011 V	erste Z. v Bl

ACHTUNG EGB!
Elektrostatisch gefährdete Bauelemente erfordern eine besondere Handhabung
ATTENTION ESD!
Electrostatic sensitive devices require a special handling.

Für diese Unterlage behalten wir alle Rechte vor

Ansicht und Leitungsführung Bauteilseite
View of tracks on component side

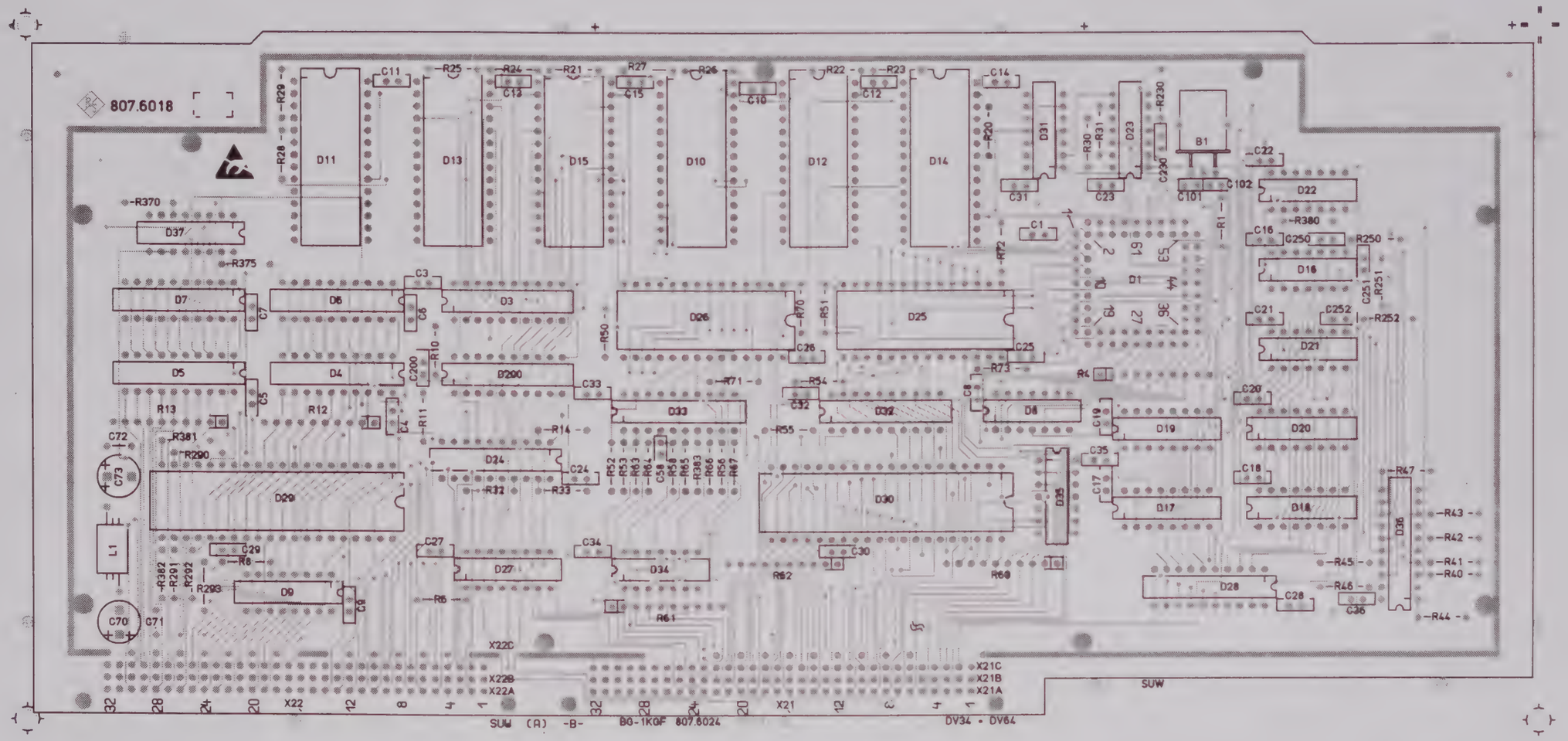

DV 41

VARIANTENERKLÄRUNG/VERSION
VAR 02 – GRUNDAUSFÜHRUNG/BASIC MODEL

H	32745 (83)	01.87	BG	Maße ohne Toleranzangabe	Maßstab 1 : 1	
K	32 766 (5)	09.87	Pf		Halbzeug, Werkstoff	
L	32 766 (10)	10.87	Bg			
				1KGF Tag Name	Benennung	
				Bearb 01.87 BG	FREQUENCY PROCESSOR	Z
				Gepr		
				Norm		
And Zust	Änderungs-Mitteilung	Tag	Name	ROHDE&SCHWARZ	Zeichn-Nr 807.6018.01 EE	Blatt-Nr 2 v Bl
				zu Gerat FSA	reg. i. V. 806.4011 V	erste Z.

ACHTUNG EGB!
Elektrostatisch gefährdete Bauelemente erfordern eine besondere Handhabung
ATTENTION ESD!
Electrostatic sensitive devices require a special handling

(herzu HVC 250)

Für diese Unterlage behalten wir alle Rechte vor

ROHDE&SCHWARZ

SERVICE DOCUMENTATION

Interface

807.7014.02

Contents

		Page
6	**Service Instructions Interface**	6.1
6.1	**Function Description**	6.1
6.1.1	Keyboard Controller	6.1
6.1.2	LED Control	6.1
6.1.3	Attenuation Set Control and Analog Multiplexer	6.1
6.1.4	Antenna Coding	6.1
6.1.5	Evaluation of Rotary Pulse Generator	6.1
6.2	**Testing and Adjustment**	6.3
6.3	Troubleshooting	6.3
6.4	**Address Assignment of Interface Board**	6.3
6.5	**Interrupt Assignment**	6.3

Parts lists
Circuit diagrams
Component location plans

6 Service Instructions Interface

(See circuit diagram 807.7014 S)

6.1 Function Description

The interface module makes the connection between the RF unit and the display unit. It is connected to the hardware bus of the I/O board via the backplane wiring. It contains its own data bus driver, an address decoder (SEL0 to SEL6), an interrupt controller 8259, a keybord controller 8279, two programmable port ICs 8255 and 4 analog multiplexers with 8 channels each. The evaluation circuit of a rotary pulse generator is also located on the module.

6.1.1 Keyboard Controller

The keyboard controller 8279 (D6) obtains its clock signal from its own RC oscillator (D17). The address decoder D7 converts the column addresses SL0 to SL2 into the corresponding activation signals TA0 to TA3.

6.1.2 LED Control

The latches D8 and D9 drive the LEDs on the keyboard module (RF unit). The LEDs are switched on by a Low level and off by a High level. The LEDs are powered via the filter element R30/C50. The functions of the keys POWER and PRESET can be blocked by the lines ONLOCK and LPRES (each High) (See Service Manual Keyboard (RF unit)).

6.1.3 Attenuation Set Control and Analog Multiplexer

The control signals for the two attenuation sets are generated by the programmable port IC 8255 (D10). The ports A, B and C operate as output ports in mode 0. The 4 analog multiplexers are addressed by the signals PC4 to PC7; PC4 to PC6 set the channel address and PC7 is used to deactivate all analog channels (INH at High).

The analog multiplexer can be used to distribute 32 analog input signals amongst 4 outputs. The multiplexer D24 connects various operating voltages to the input of the A/D converter. The voltages are converted by voltage dividers into output voltages of approx. 1 V. The analog inputs of D22 are protected by diodes.

6.1.4 Antenna Coding

The antenna coding socket is evaluated by the port IC D13. The input of the code can be read in by port B. The comparator D14 compares this information with the output by port A and generates an interrupt at input IR2 of the interrupt controller if the values are different. Input PC0 can be used to read in the direction of rotation of the spinwheel. Line PC1 enables the FIFO state to be checked (interface from frequency microprocessor → interface)

6.1.5 Evaluation of Rotary Pulse Generator

The D flip-flops D15A and B evaluate the positive and negative edges of the reference signal DR0. The direction of rotation is stored by the D flip-flop D20 and can be read in via D13. The gate D17A generates the signal IR0 to the interrupt controller. The flip-flops can be reset again by a read access to address 50H.

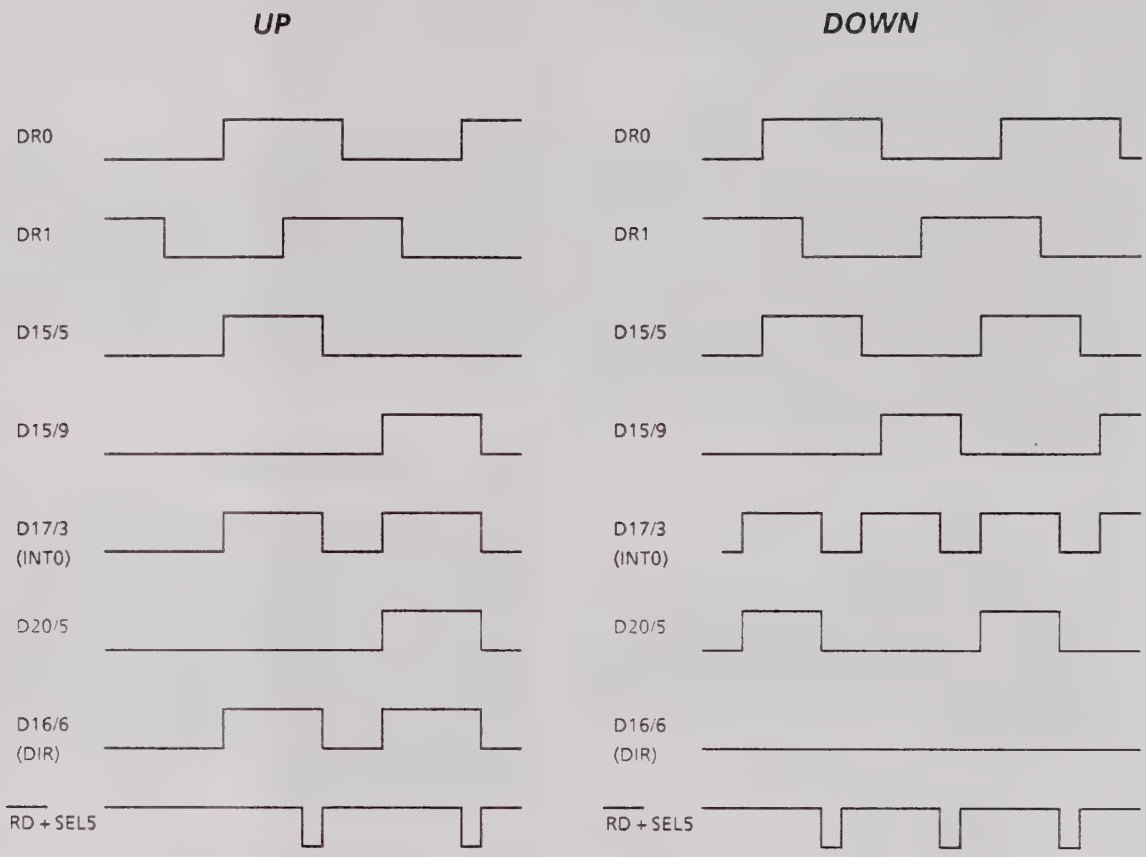

Fig. 6-1 Timing diagram of rotary pulse generator

6.2 Testing and Adjustment

No adjustments are necessary.

6.3 Troubleshooting

Faulty components can be located using the built-in test programs (see Service Manual I/O Board).

6.4 Address Assignment of Interface Board

Address area	Address	Line	Function
0000 – 000F		SEL0	Interrupt controller D5
	0000		ICW2, ICW3, ICW4 OCW1
	0002		ICW1, OCW2, OCW3
0010 – 001F		SEL1	Keyboard controller D6
	0010		Status / command
	0012		Data
0020 – 002F		SEL2	Output latch D6
0030 – 003F		SEL3	Attenuation set control D10
	0030		Control
	0032		Port B
	0034		Port C
	0036		Port A
0040 – 004F		SEL4	Antenna code D13
	0040		Control
	0042		Port B
	0044		Port C
	0046		Port A
0050 – 005F		SEL5	Rotary pulse generator
0060 – 006F		SEL6	Output latch D6

6.5 Interrupt Assignment

Line	Function
IR0	Rotary pulse generator
IR1	Keyboard
IR2	Antenna code
IR3	X10 B21
IR4	X10 B20
IR6	X10 A20
IR7	X10 C19

ROHDE&SCHWARZ

Schaltteillisten
Stromläufe
Bestückungspläne

Part lists
Circuit diagrams
Components plans

Listes des pièces détachées
Schémas de Circuit
Plans des composants

(R 29500 Bl 2)
095.1000 BL 2

Kennz. Comp.No.	Benennung Designation	Sachnummer Stock No.	Hersteller Manufacturer	Bezeichnung Designation	enthalten in contained in
.	ZUGEH.STROML./CIRC.DIAGR. 807.7014 S				
C1	CC 10NF-20+50%7X8R4000	CC 087.7525	VALVO	2222 63051 64051103	
..19	CAPACITOR				
C20	CK 22NF+-5%63V5RM MKT	CK 099.2881	WIMA	MKS2/63/0,022UF/5%	
	CAPACITOR				
C21	CK 220NF+-5%63V5RM MKT	CK 099.2952	WIMA	MKS2/63/0,22UF/5%	
	CAPACITOR				
C22	CE 220UF-10+50%6V 8,7X13	CE 022.7520	ROEDERST	EK 00 CB 322 B	
	ELEKTROLYTIC CAPACITOR				
C23	CK 22NF+-5%63V5RM MKT	CK 099.2881	WIMA	MKS2/63/0,022UF/5%	
	CAPACITOR				
C24	CK 220NF+-5%63V5RM MKT	CK 099.2952	WIMA	MKS2/63/0,22UF/5%	
	CAPACITOR				
C25	CE 220UF-10+50%6V 8,7X13	CE 022.7520	ROEDERST	EK 00 CB 322 B	
	ELEKTROLYTIC CAPACITOR				
C27	CC 1NF+-10%63V K2000	CC 022.0784	VALVO	2222 63051 102	
	CERAMIC CAPACITOR				
C28	CC 47PF+-2%3X4N750	CC 087.6864	VALVO	2222 678 58479	
	CAPACITOR				
C30	CC 1NF+-10%63V K2000	CC 022.0784	VALVO	2222 63051 102	
..45	CERAMIC CAPACITOR				
C50	CE 100UF-10+50% 16V 9X13	CE 006.7165	ROEDERST	EK 00CB 310 D	
	ELECTROLYTIC CAPACITOR				
C51	CC 1NF+-10%63V K2000	CC 022.0784	VALVO	2222 63051 102	
..71	CERAMIC CAPACITOR				
C75	CC 1NF+-10%63V K2000	CC 022.0784	VALVO	2222 63051 102	
..79	CERAMIC CAPACITOR				
C83	CC 1NF+-10%63V K2000	CC 022.0784	VALVO	2222 63051 102	
..98	CERAMIC CAPACITOR				
C101	CC 1NF+-10%63V K2000	CC 022.0784	VALVO	2222 63051 102	
..104	CERAMIC CAPACITOR				
C111	CC 10NF-20+50%7X8R4000	CC 087.7525	VALVO	2222 63051 64051103	
	CAPACITOR				
C112	CC 10NF-20+50%7X8R4000	CC 087.7525	VALVO	2222 63051 64051103	
	CAPACITOR				
C113	CC 10NF-20+50%7X8R4000	CC 087.7525	VALVO	2222 63051 64051103	
	CAPACITOR				
C115	CC 1NF+-10%63V K2000	CC 022.0784	VALVO	2222 63051 102	
..130	CERAMIC CAPACITOR				
C133	CC 1NF+-10%63V K2000	CC 022.0784	VALVO	2222 63051 102	
..140	CERAMIC CAPACITOR				
C141	CK 1UF+-10%50V5RM MKT	CK 099.2998	WIMA	MKS2/50/1UF/10%	
	CAPACITOR				
C142	CK 1UF+-10%50V5RM MKT	CK 099.2998	WIMA	MKS2/50/1UF/10%	
	CAPACITOR				
C143	CC 1NF+-10%63V K2000	CC 022.0784	VALVO	2222 63051 102	
..158	CERAMIC CAPACITOR				
C161	CC 1NF+-10%63V K2000	CC 022.0784	VALVO	2222 63051 102	
..164	CERAMIC CAPACITOR				
D1	BL MM74HC138N 3/8L.DECOD	BL 571.3165	MOTOROLA	MC74HC138N	
	3-TO-8 LINE DECODER				
D2	BL MM74HC08N 4X2IN ANDG	BL 571.3313	MOTOROLA	MC74HC08N	
	QUAD 2INP. AND GATE				
D3	BL MM74HC04N 6XINVERTER	BL 571.3365	MOTOROLA	MC74HC04N	
	HEX-INVERTER				
D4	BL MM74HC245N 8XB.TRANSC	BL 571.3242	MOTOROLA	MC74HC245N	
	OCTAL TRI-ST.TRANSCEIVER				
D5	BC MSM82C59A INTERR.CONTR	BC 006.9597	OKI	MSM82C59A	
	INTERRUPT CONTROLLER				
D6	BC P8279-5 KEYB.DISP.IF	BC 334.2496	INTEL	P8279-5	
	I/O KEYBOARD DISPLAY				
D7	BL MM74HC138N 3/8L.DECOD	BL 571.3165	MOTOROLA	MC74HC138N	
	3-TO-8 LINE DECODER				
D8	BL SN74LS377N 8B-D-REGIST	345.6552	TEXAS	SN74LS377N	
	IC-SN74LS377N				
D9	BL SN74LS377N 8B-D-REGIST	345.6552	TEXAS	SN74LS377N	
	IC-SN74LS377N				
D10	BC MSM82C55A-5RS PROGR.IF	BC 006.9616	OKI	MSM82C55A-5RS	
	PROGR.PERIPH.INTERFACE				
D11	BL CD4051BF 8CH. MUX	BL 517.7520	RCA	CD4051BF	
	MULTIPLEXER				
D12	BL CD4051BF 8CH. MUX	BL 517.7520	RCA	CD4051BF	
	MULTIPLEXER				
D13	BC MSM82C55A-5RS PROGR.IF	BC 006.9616	OKI	MSM82C55A-5RS	
	PROGR.PERIPH.INTERFACE				

Für diese Unterlage behalten wir alle Rechte vor

Kennz. Comp.No.	Benennung Designation	Sachnummer Stock No.	Hersteller Manufacturer	Bezeichnung Designation	enthalten in contained in
D14	BL MM74HC688N 8B.COMPAR. 8-BIT MAGNITUDE COMP.	BL 571.3207	NSC	MM74HC688N	
D15	BL MM74HC74N 2XD-FLIPFL DUAL D FLIP-FLOP	BL 571.3171	NSC	MM74HC74N	
D16	BL MM74HC86N 4X2IN.EXOR QUAD 2-INP.EXCL.OR GATE	BL 571.3159	NSC	MM74HC86N	
D17	BL MM74HCOON 4X2IN.NAND QUAD 2-INPUT NAND GATE	BL 571.3194	MOTOROLA	MC74HCOON	
D18	BL MM74HC04N 6XINVERTER HEX-INVERTER	BL 571.3365	MOTOROLA	MC74HC04N	
D19	BL MC74HC32N 4X2INP-OR-G QUAD 2-INPUT OR GATE	BL 571.3220	MOTOROLA	MC74HC32N	
D20	BL MM74HC74N 2XD-FLIPFL DUAL D FLIP-FLOP	BL 571.3171	NSC	MM74HC74N	
D21	BL CD4051BF 8CH. MUX MULTIPLEXER	BL 517.7520	RCA	CD4051BF	
D22	BL CD4051BF 8CH. MUX MULTIPLEXER	BL 517.7520	RCA	CD4051BF	
L1	LD UKW-DR.Z=75O OHM 5OMHZ CHOKE	LD 026.4578	VALVO	431202036641	
L2	LD 1O,OUH1O%3,3OOHMO,144A CHOKE	LD 026.4184	DELEVAN	DROSSEL1025-44	
L3	LD 1O,OUH1O%3,3OOHMO,144A CHOKE	LD 026.4184	DELEVAN	DROSSEL1025-44	
L4	LD 1O,OUH1O%3,3OOHMO,144A CHOKE	LD 026.4184	DELEVAN	DROSSEL1025-44	
L5 ..13	LD 1O,OUH1O%3,3OOHMO,144A CHOKE	LD 026.4184	DELEVAN	DROSSEL1025-44	
L14	LD 1O,OUH1O%3,3OOHMO,144A CHOKE	LD 026.4184	DELEVAN	DROSSEL1025-44	
L15	LD 1O,OUH1O%3,3OOHMO,144A CHOKE	LD 026.4184	DELEVAN	DROSSEL1025-44	
L16	LD 1O,OUH1O%3,3OOHMO,144A CHOKE	LD 026.4184	DELEVAN	DROSSEL1025-44	
L17	LD 1O,OUH1O%3,3OOHMO,144A CHOKE	LD 026.4184	DELEVAN	DROSSEL1025-44	
L20 ..23	LD 1O,OUH1O%3,3OOHMO,144A CHOKE	LD 026.4184	DELEVAN	DROSSEL1025-44	
L25	LD 1O,OUH1O%3,3OOHMO,144A CHOKE	LD 026.4184	DELEVAN	DROSSEL1025-44	
R1	RL 0,35W 475 OHM+-1%TK5O RESISTOR	RL 083.0390	DRALORIC	SMAO207/475OHM-F-D	
R2	RL 0,35W 4,75KOHM+-1%TK5O RESISTOR	RL 083.1097	DRALORIC	SMAO207/4,75K-F-D	
R3	RL 0,35W 4,75KOHM+-1%TK5O RESISTOR	RL 083.1097	DRALORIC	SMAO207/4,75K-F-D	
R4	RN 9X4,7KOHM+-2% SIL1O H5 NETWORK	RN 327.0804	BOURNS	431OR-101-472	
R5 ..11	RL 0,35W 4,75KOHM+-1%TK5O RESISTOR	RL 083.1097	DRALORIC	SMAO207/4,75K-F-D	
R13	RL 0,35W 3,92KOHM+-1%TK5O RESISTOR	RL 083.1039	RESISTA	MK2	
R14	RL 0,35W 3,92KOHM+-1%TK5O RESISTOR	RL 083.1039	RESISTA	MK2	
R15	RL 0,21W 1OO OHM+-1%TK5O DEPOS.-CARBON RESISTOR	RL 092.1321	RESISTA	MK1 1OOOHM 1% TK5O	
R16	RL 0,35W 1OO OHM+-1%TK5O METALFILM-RESISTOR	RL 082.6543	DRALORIC	SMAO207/1OO/HM-F-D	
R17 ..24	RL 0,35W 1O,OKOHM+-1%TK5O RESISTOR	RL 083.1297	DRALORIC	SMAO207/1OK-F-D	
R30	RL 0,35W 1,0 OHM+-1%TK5O METALFILMRESISTOR	RL 099.7860	RESISTA	MK2 1,OO OHM 1% TK5O	
R31 ..38	RL 0,35W 1O,0 OHM+-1%TK5O RESISTOR	RL 082.8852	DRALORIC	SMAO207/1OOHM-F-D	
R39 ..43	RL 0,35W 221 OHM+-1%TK5O RESISTOR	RL 083.0084	DRALORIC	SMAO207/221OHM-F-D	
R5O ..53	RL 0,35W 1O,OKOHM+-1%TK5O RESISTOR	RL 083.1297	DRALORIC	SMAO207/1OK-F-D	
R55	RN 9X4,7KOHM+-2% SIL1O H5 NETWORK	RN 327.0804	BOURNS	431OR-101-472	
R56 ..63	RL 0,35W 475 OHM+-1%TK5O RESISTOR	RL 083.0390	DRALORIC	SMAO207/475OHM-F-D	
R64 ..67	RL 0,35W 4,75KOHM+-1%TK5O RESISTOR	RL 083.1097	DRALORIC	SMAO207/4,75K-F-D	
R69	RL 0,35W 4,75KOHM+-1%TK5O RESISTOR	RL 083.1097	DRALORIC	SMAO207/4,75K-F-D	

Kennz. Comp.No.	Benennung Designation	Sachnummer Stock No.	Hersteller Manufacturer	Bezeichnung Designation	enthalten in contained in
R70	RL 0,35W 4,75KOHM+-1%TK50 RESISTOR	RL 083.1097	DRALORIC	SMA0207/4,75K-F-D	
R81	RL O-WIDERSTAND DIN 0204 O-OHM RESISTOR	RL 069.0000	DRALORIC	OMA 0204	
R82	RL O-WIDERSTAND DIN 0204 O-OHM RESISTOR	RL 069.0000	DRALORIC	OMA 0204	
R83	RL 0,35W 4,75KOHM+-1%TK50 RESISTOR	RL 083.1097	DRALORIC	SMA0207/4,75K-F-D	
R91	RL 0,35W 4,75KOHM+-1%TK50 RESISTOR	RL 083.1097	DRALORIC	SMA0207/4,75K-F-D	
R92	RL 0,21W 1,21KOHM+-1%TK50 RESISTOR	RL 092.1450	RESISTA	MK1 1K21 1% TK50	
R93	RL 0,35W 4,75KOHM+-1%TK50 RESISTOR	RL 083.1097	DRALORIC	SMA0207/4,75K-F-D	
R94	RL 0,21W 1,00KOHM+-1%TK50 RESISTOR	RL 092.1444	RESISTA	MK1 1K00 1% TK50	
R96	RL 0,35W 4,75KOHM+-1%TK50 RESISTOR	RL 083.1097	DRALORIC	SMA0207/4,75K-F-D	
R97	RL 0,21W 332 OHM+-1%TK50 RESISTOR	RL 092.1380	RESISTA	MK1 332OHM 1% TK50	
R100	RL 0,21W 18,2KOHM+-1%TK50 RESISTOR	RL 092.1596	RESISTA	MK1 18K2 1% TK50	
R101	RL 0,21W 825 OHM+-1%TK50 RESISTOR	RL 092.1438	RESISTA	MK1 825OHM 1% TK50	
R102	RL 0,21W 1,00KOHM+-1%TK50 RESISTOR	RL 092.1444	RESISTA	MK1 1K00 1% TK50	
R104	RL 0,21W 27,4KOHM+-1%TK50 RESISTOR	RL 092.1615	RESISTA	MK1 27K4 1% TK50	
R105	RL 0,21W 1,00KOHM+-1%TK50 RESISTOR	RL 092.1444	RESISTA	MK1 1K00 1% TK50	
R107	RL 0,35W 4,75KOHM+-1%TK50 RESISTOR	RL 083.1097	DRALORIC	SMA0207/4,75K-F-D	
R108	RL 0,21W 1,21KOHM+-1%TK50 RESISTOR	RL 092.1450	RESISTA	MK1 1K21 1% TK50	
R111 ..134	RL 0,21W 1,00KOHM+-1%TK50 RESISTOR	RL 092.1444	RESISTA	MK1 1K00 1% TK50	
R141 ..147	RL 0,21W 100 OHM+-1%TK50 DEPOS.-CARBON RESISTOR	RL 092.1321	RESISTA	[illegible]	
R151	RL 0,35W 4,75KOHM+-1%TK50 RESISTOR	RL 083.1097	DRALORIC	SMA0207/4,75K-F-D	
R152	RL 0,21W 100 OHM+-1%TK50 DEPOS.-CARBON RESISTOR	RL 092.1321	RESISTA	MK1 100OHM 1% TK50	
R154	RL 0,35W 4,75KOHM+-1%TK50 RESISTOR	RL 083.1097	DRALORIC	SMA0207/4,75K-F-D	
R155	RL 0,21W 100 OHM+-1%TK50 DEPOS.-CARBON RESISTOR	RL 092.1321	RESISTA	MK1 100OHM 1% TK50	
R157	RL 0,21W 100 OHM+-1%TK50 DEPOS.-CARBON RESISTOR	RL 092.1321	RESISTA	MK1 100OHM 1% TK50	
R158	RL 0,21W 100 OHM+-1%TK50 DEPOS.-CARBON RESISTOR	RL 092.1321	RESISTA	MK1 100OHM 1% TK50	
R161 ..168	RL 0,21W 100 OHM+-1%TK50 DEPOS.-CARBON RESISTOR	RL 092.1321	RESISTA	MK1 100OHM 1% TK50	
V31 ..35	AD 1N4448 75V 0,15A UDI DIODE	AD 012.0700	TEXAS INST	1N4448 GEGURTET	
X10	FP IND.STECKERLEISTE 96P MALE MULTIPOINT CONNECTOR	FP 272.9187	PANDUIT	100-096-033/999	
X20	FP STECKERL.INDIR.64POLIG 64-PIN INSERT	FP 084.6470	PANDUIT	100-064-033/999	
					- ENDE -

Für diese Unterlage behalten wir uns alle Rechte vor

INTERRUPT CONTROLLER

TASTATUR

LED-ANSTEUERUNG

Alle C's 10n

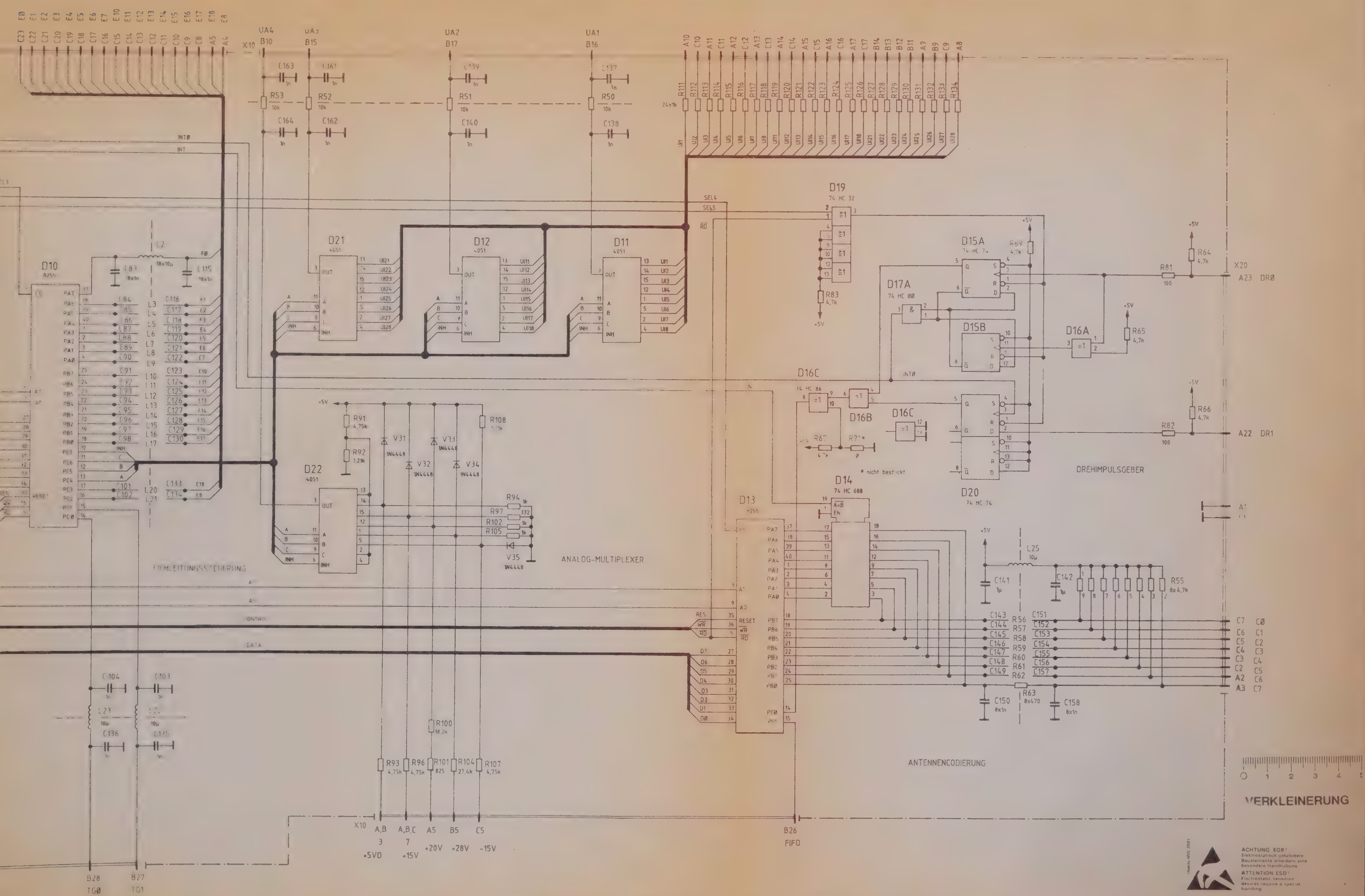

ROHDE & SCHWARZ

A		09.85	H.W.	1KGF	Tag	Name
B	37 063 (44)	11.88	HW	Bearb.	20.12.84	PF

Benennung: INTERFACE

Zeichn.-Nr.: 807. 7014 S

FSA

806 4011 V

ROHDE&SCHWARZ

SERVICE DOCUMENTATION

Keyboard

806.4811.02

Contents

		Page
6	**Service Instructions Keyboard**	6.1
6.1	Function Description	6.1
6.2	Testing and Adjustment	6.1
6.3	Troubleshooting	6.1

Parts lists
Circuit diagrams
Component location plans

6 Service Instructions Keyboard (RF Unit)

.(See circuit diagram 806.5018 S)

6.1 Function Description

The keyboard module (RF unit) is driven by the interface module. It contains the connectors for driving two attenuation sets, a keyboard matrix 4 x 8, a rotary pulse generator and various LEDs. The module also contains the connector for the antenna coding and a logic circuit for disabling the keys POWER and PRESET.

The keyboard matrix is driven by the keyboard controller of the interface module (column addresses TA0 to TA3, feedback RL0 to RL7). The power supply to the statically controlled LEDs UL0 to UL7 and UL10 to UL12 is via the interface board (ULED). This also contains the series resistors for the LEDs. The control signals of the attenuation sets E0 to E8 and E10 to E18 are taken to connector X31 whereas the supply lines (5 V and 15 V) to X32. The voltage supply for the antenna coding (± 12 V) is obtained from the operating voltages of ± 15 V (connector X32) using two voltage regulators (LM317 and LM237).

6.2 Testing and Adjustment

No adjustments are necessary.

6.3 Troubleshooting

Check the following voltages on connector X32:

+ 5 V	X32/3,4
+ 15V	X32/12,14
–15 V	X32/13
Ground	X32/1,2,11,15,16

Check the following voltages on connector X37:

+ 10 V	X37/B
–10 V	X37/K

The function and correct polarity of the LEDs can be tested by connecting the LED control inputs UL0 to UL7 and UL10 to UL12 to ground (current limitation by resistor)

The rotary pulse generator produces squarewave pulses offset in phase by 90° at outputs DR0 and DR1. The phase shift must be reversed when the direction of rotation is changed

ROHDE&SCHWARZ

Schaltteillisten
Stromläufe
Bestückungspläne
Part lists
Circuit diagrams
Components plans
Listes des pièces détachées
Schémas de Circuit
Plans des composants

(R 29500 Bl 2)
895.1000 Bl. 2

Kennz. Comp.No.	Benennung Designation	Sachnummer Stock No.	Hersteller Manufacturer	Bezeichnung Designation	enthalten in contained in
.	ZUGEH.STROML./CIRC.DIAGR. 806.5018 S				
B1	BS UGN3020T HALL-EFF.SW. HALL-EFF.SWITCH	BS 336 4750	SPRAGUE	UGN-3020T	
B2	BS UGN3020T HALL-EFF.SW. HALL-EFF.SWITCH	BS 336.4750	SPRAGUE	UGN-3020T	
C1	CC 100NF+-10%50V5K1200VIE CAPACITOR	CC 084.5350	UNION CARB	CK05BX104K	
C2	CE 100UF+-20%25V RD8X9,5 ELECTROLYTIC CAPACITOR	803.0580	MATSUSHITA	ECE-A1ESS-101	
C3	CE 10UF+-20%35V RD5X5 ELECTROLYTIC CAPACITOR	803.0667	NATION PAN	ECE-A1VKS-100	
C4	CK 1UF+-10%50V5RM MKT CAPACITOR	CK 099.2998	WIMA	MKS2/50/1UF/10%	
C5	CE 10UF+-20%35V RD5X5 ELECTROLYTIC CAPACITOR	803.0667	NATION PAN	ECE-A1VKS-100	
C6	CE 10UF+-20%35V RD5X5 ELECTROLYTIC CAPACITOR	803.0667	NATION PAN	ECE-A1VKS-100	
C7	CE 10UF+-20%35V RD5X5 ELECTROLYTIC CAPACITOR	803.0667	NATION PAN	ECE-A1VKS-100	
C8	CE 10UF+-20%35V RD5X5 ELECTROLYTIC CAPACITOR	803.0667	NATION PAN	ECE-A1VKS-100	
C15	CC 100NF+-10%50V5K1200VIE CAPACITOR	CC 084.5350	UNION CARB	CK05BX104K	
C30 ..39	CC 10NF-20+50%7X8R4000 CAPACITOR	CC 087.7525	VALVO	2222 63051 64051103	
C42 . 49	CC 10NF-20+50%7X8R4000 CAPACITOR	CC 087.7525	VALVO	2222 63051 64051103	
H1 ..4	AF HLMP1401 LED GE RD3 LED	AF 235.4604	GEN.INSTR.	HLMP1401	
H5	AF HLMP1401 LED GE RD3 NUR VAR/ONLY MOD: 03 LED	AF 235.4604	GEN.INSTR.	HLMP1401	
H6	AF HLMP1401 LED GE RD3 NUR VAR/ONLY MOD: 03 04 LED	AF 235.4604	GEN.INSTR.	HLMP1401	
H7 ..14	AF HLMP1401 LED GE RD3 LED	AF 235.4604	GEN.INSTR.	HLMP1401	
J1	ZM DREHIMPULSGEBER MOVING PULSE GENERATOR	EM 336.3348			
JH1 ...13	VS GEWINDEHAKEN M2,5 THREADED HOOK	VS 078.2224	R&S	R&S-ZCHNG.078.2224	
L30	LD UKW-DR.Z=750 OHM 50MHZ CHOKE	LD 026.4578	VALVO	431202036641	
L31	LD UKW-DR.Z=750 OHM 50MHZ CHOKE	LD 026.4578	VALVO	431202036641	
N13	BO LM337T -ADJ1A5 VREGL VOLTAGE REGULATOR	BO 339.4180	NSC	LM337T	
N14	BO LM317T +ADJ1A5 VREGL VOLTAGE REGULATOR	BO 339.4080	NSC	LM317T	
R1	RL 0,35W 274 OHM+-1%TK50 RESISTOR	RL 083.0178	DRALORIC	SMA0207/274OHM-F-D	
R2	RL 0,35W 6,81KOHM+-1%TK50 RESISTOR	RL 082.2560	DRALORIC	SMA 0207/6,81K-F-C	
R3	RL 0,35W 6,81KOHM+-1%TK50 RESISTOR	RL 082.2560	DRALORIC	SMA 0207/6,81K-F-C	
R4	RL 0,35W 274 OHM+-1%TK50 RESISTOR	RL 083.0178	DRALORIC	SMA0207/274OHM-F-D	
R5	RL 0,35W 4,75KOHM+-1%TK50 RESISTOR	RL 083.1097	DRALORIC	SMA0207/4,75K-F-D	
R6	RL 0,35W 2,21KOHM+-1%TK50 RESISTOR	RL 082.2477	DRALORIC	SMA 0207/2,21K-F-C	
R7	RL 0,35W 2,74KOHM+-1%TK50 RESISTOR	RL 083.0926	DRALORIC	SMA0207/2,74K-F-D	
R8	RL 0,35W 221 OHM+-1%TK50 RESISTOR	RL 083.0084	DRALORIC	SMA0207/221OHM-F-D	
R11	RL 0,35W 1,82KOHM+-1%TK50 RESISTOR	RL 082.2277	DRALORIC	SMA0207/1,82K-F-C	
R12	RL 0,35W 1,82KOHM+-1%TK50 RESISTOR	RL 082.2277	DRALORIC	SMA0207/1,82K-F-C	

Kennz. Comp.No.	Benennung Designation	Sachnummer Stock No.	Hersteller Manufacturer	Bezeichnung Designation	enthalten in contained in
R15	RL 0,35W 68,1KOHM+-1%TK50 RESISTOR	RL 082.2602	DRALORIC	SMA 0207/68.1K-F-C	
R32 ..39	RL 0,35W 562 OHM+-1%TK50 RESISTOR	RL 083.0461	DRALORIC	SMA0207/5620HM-F-D	
S1 ..23	SB TASTER 1XA OHNE KNOPF PUSHBUTTON SWITCH	SB 238.3850	SIEMENS	STB11 M.LED-LOECHERN	
S24	SB TASTER 1XU OHNE KNOPF PUSH BUTTON SWITCH	821.8389	SIEMENS	V42263-D15-A9	
S25 ..31	SB TASTER 1XA OHNE KNOPF PUSHBUTTON SWITCH	SB 238.3850	SIEMENS	STB11 M.LED-LOECHERN	
V1	AG 1N4007 GL1000V 1A0 RECTIFIER	AG 013.0310	AEG-TELEF	1N4007	
V2	AG 1N4007 GL1000V 1A0 RECTIFIER	AG 013.0310	AEG-TELEF	1N4007	
V4	AG 1N4007 GL1000V 1A0 RECTIFIER	AG 013.0310	AEG-TELEF	1N4007	
V5	AG 1N4007 GL1000V 1A0 RECTIFIER	AG 013.0310	AEG-TELEF	1N4007	
V10	AK BCY59IX NPN 45V 200MA TRANSISTOR	AK 010.5163	SIEMENS	BCY59IX	
V11	AD 1N4448 75V 0,15A UDI DIODE	AD 012.0700	TEXAS INST	1N4448 GEGURTET	
V12	AD 1N4448 75V 0,15A UDI DIODE	AD 012.0700	TEXAS INST	1N4448 GEGURTET	
V15	AD 1N4448 75V 0,15A UDI DIODE	AD 012.0700	TEXAS INST	1N4448 GEGURTET	
V16	AK BCY59IX NPN 45V 200MA TRANSISTOR	AK 010.5163	SIEMENS	BCY59IX	
V20 ..23	AD 1N4448 75V 0,15A UDI DIODE	AD 012.0700	TEXAS INST	1N4448 GEGURTET	
V42 ..49	AD 1N4448 75V 0,15A UDI DIODE	AD 012.0700	TEXAS INST	1N4448 GEGURTET	
X31	DX BUCHSENEINHEIT X31 CONNECTING CABLE	806.5060			
X32	FP LP-STECKER 2REIH.16W ANGLE PIN CONNECTOR	806.5053			
X33	FP LP-STECKER 2REIH.16W ANGLE PIN CONNECTOR	806.5053			
X34	FP LP-STECKER 2REIH.16W ANGLE PIN CONNECTOR	806.5053			
X35	FP WINKELSTECKERLEIST.36P 4-POL. ANGLE PIN CONNECTOR	FP 243.3578	BERG	75168-113-36	
X37	FO EINBAUBUCHSE12P.T.LOET CONNECTOR 12POL	806.5418	BINDER	680-09-0332-50-12	
					- ENDE -

...s alle Rechte vor

Kennz. Comp.No.	Benennung Designation	Sachnummer Stock No.	Hersteller Manufacturer	Bezeichnung Designation	enthalten in contained in
A111	ED KEYBOARD RF NUR VAR/ONLY MOD: 02 HIERZU STROML. 806.5018 S SEE CIRC.DIAGR.806.5018 S KEYBOARD	806.5018.02			
A111	ED KEYBOARD RF NUR VAR/ONLY MOD: 03 HIERZU STROML.806.5018 S SEE CIRC.DIAGR.806.5018 S	806.5018.03			
A111	ED KEYBOARD RF NUR VAR/ONLY MOD: 04 HIERZU STROML.806.5018 S SEE CIRC.DIAGR.806.5018 S	806.5018.04			
W60	DX HF-KABEL W60 RF CABLE	808.6140			
W351	DX KABEL W351 NUR VAR/ONLY MOD: 03	808.7030			
					- ENDE -

ROHDE & SCHWARZ	Äl	Datum Date	Schaltteiliste für Parts list for	Sachnummer Stock Nr.	Blatt Page
	05	1187	ZM FRONTPLATTENEINHEIT FRONT PANEL UNIT	806.4811.01 SA	1-

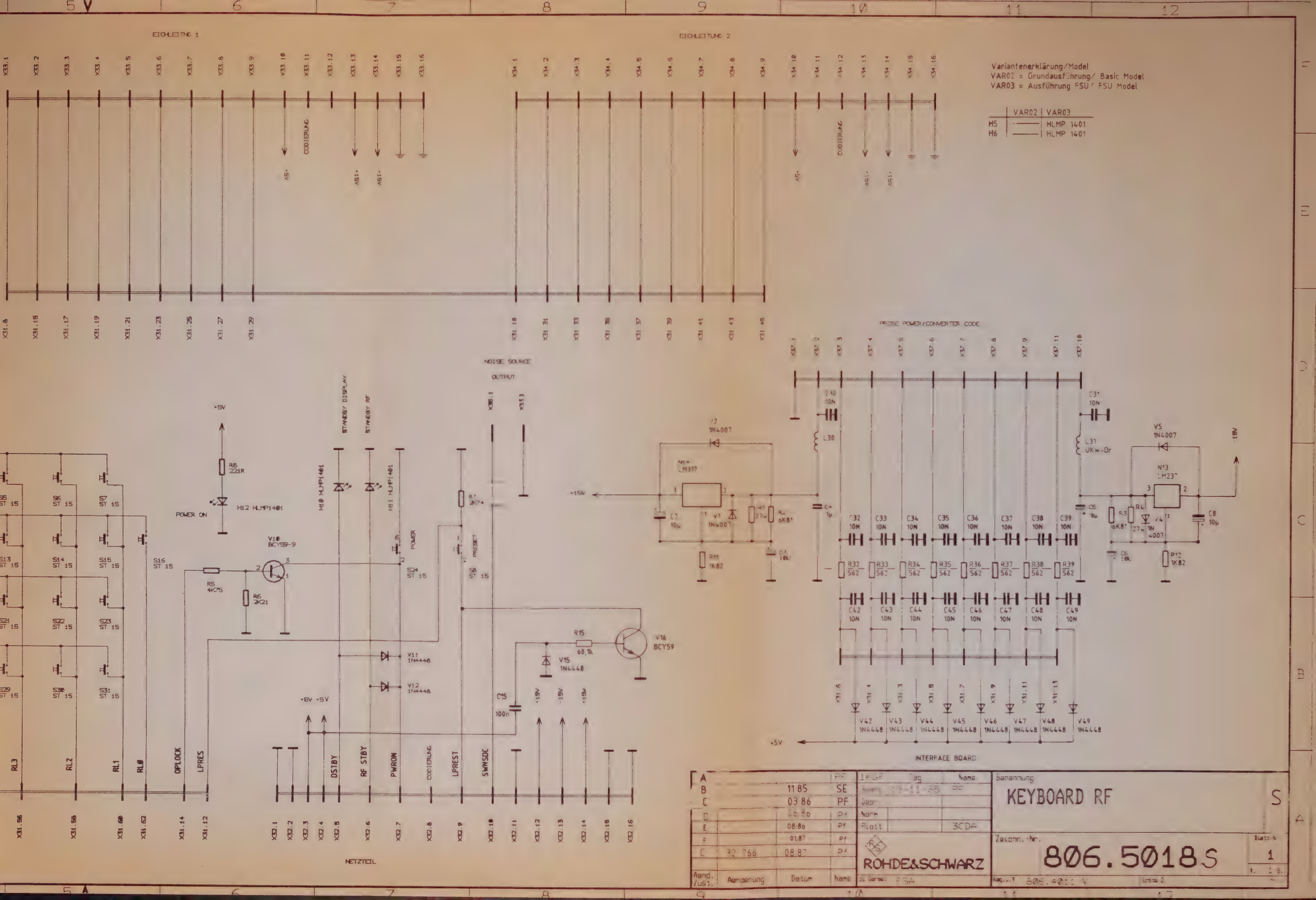

A			PF
B		11 85	SE
C		03 86	PF
D		06 86	Pf
E		08 86	Pf
F		01 87	Pf
G	32 766	08 87	Pf
Aend. Zust.	Aenderung	Datum	Name

	Tag	Name
Gezeichnet	13-11-85	PF
Geprüft		
Norm		
Plott		3CDA

ROHDE&SCHWARZ

Benennung: KEYBOARD RF

S

Zeichn.-Nr.: 806.5018S

Blatt: 1

Kg.-Nr. 806.4011 V

FUER DIESE ZEICHNUNG BEHALTEN WIR UNS ALLE RECHTE VOR
DIESE ZEICHNUNG IST EI[illegible]NERAUSDUCK. AEN[illegible]GEN KOENNEN NUR DURCH AENDERN[illegible]S DATENSATZES ERFOLGEN

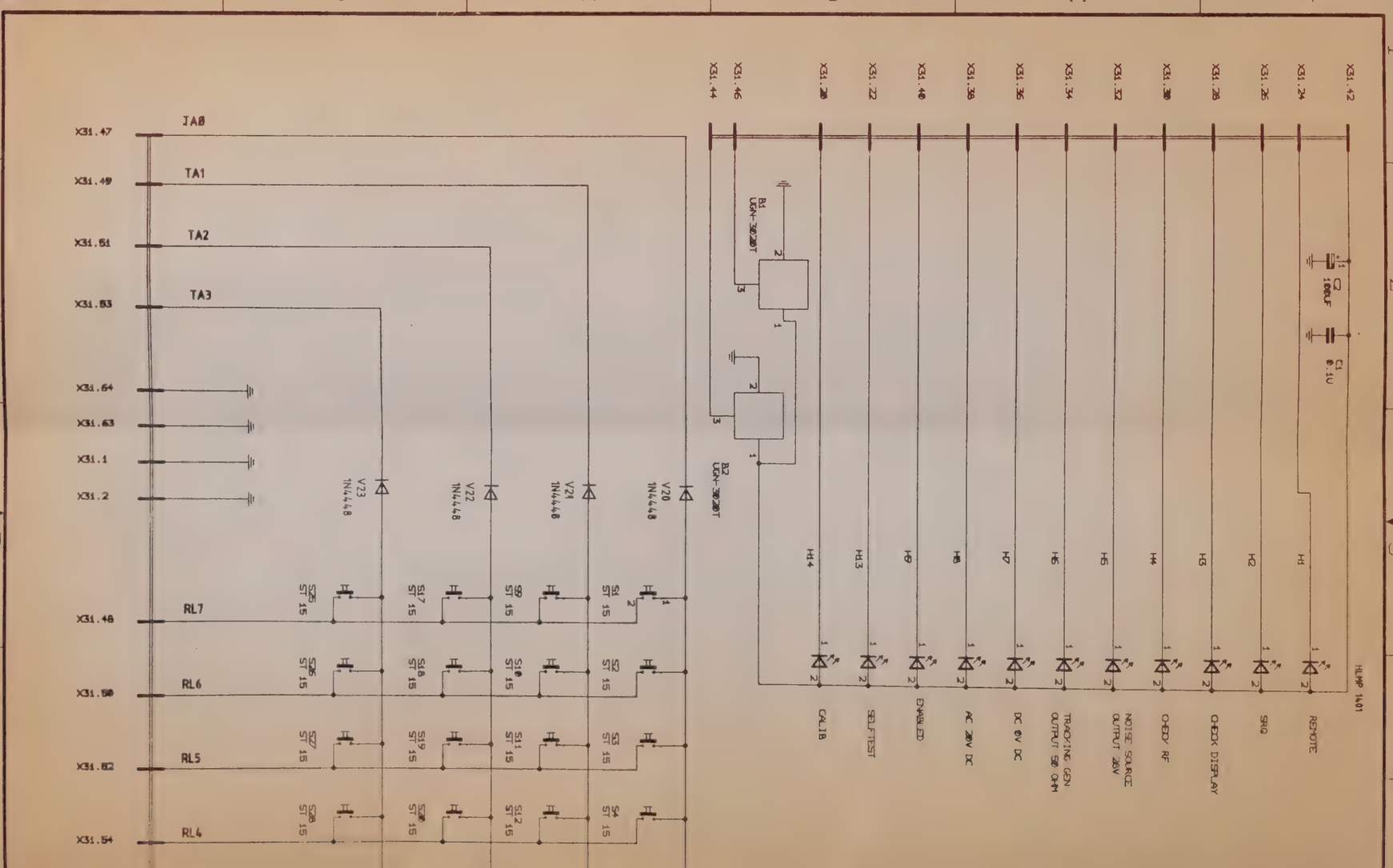

Ansicht und Leitungsfuhrung Bauteilseite
View of tracks on component side

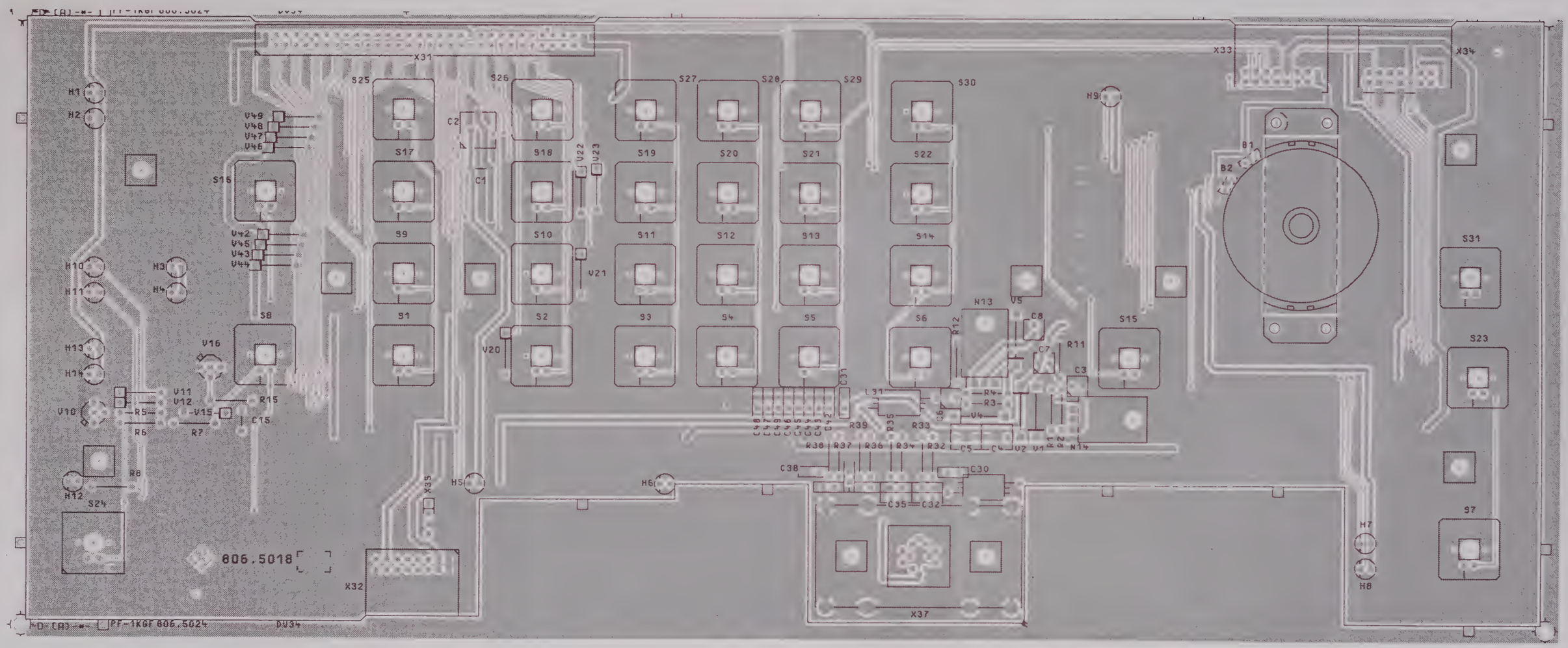

I 37 063	01.88	Pa	Maße ohne Toleranzangabe	Maßstab 1 : 1	
				Halbzeug, Werkstoff	
			1KEF Tag Name	Benennung KEYBOARD	Z
			Bearb 01.88 PA		
			Gepr		
			Norm		
Änd Zust	Änderungs-Mitteilung	Tag Name	ROHDE&SCHWARZ	Zeichn.-Nr 806.5018	Blatt-Nr 2
			zu Gerät FSA	reg. V 806.4011 V erste Z	v Bl

Für diese Unterlage behalten
wir uns alle Rechte vor

Für diese Unterlage behalten
wir alle Rechte vor

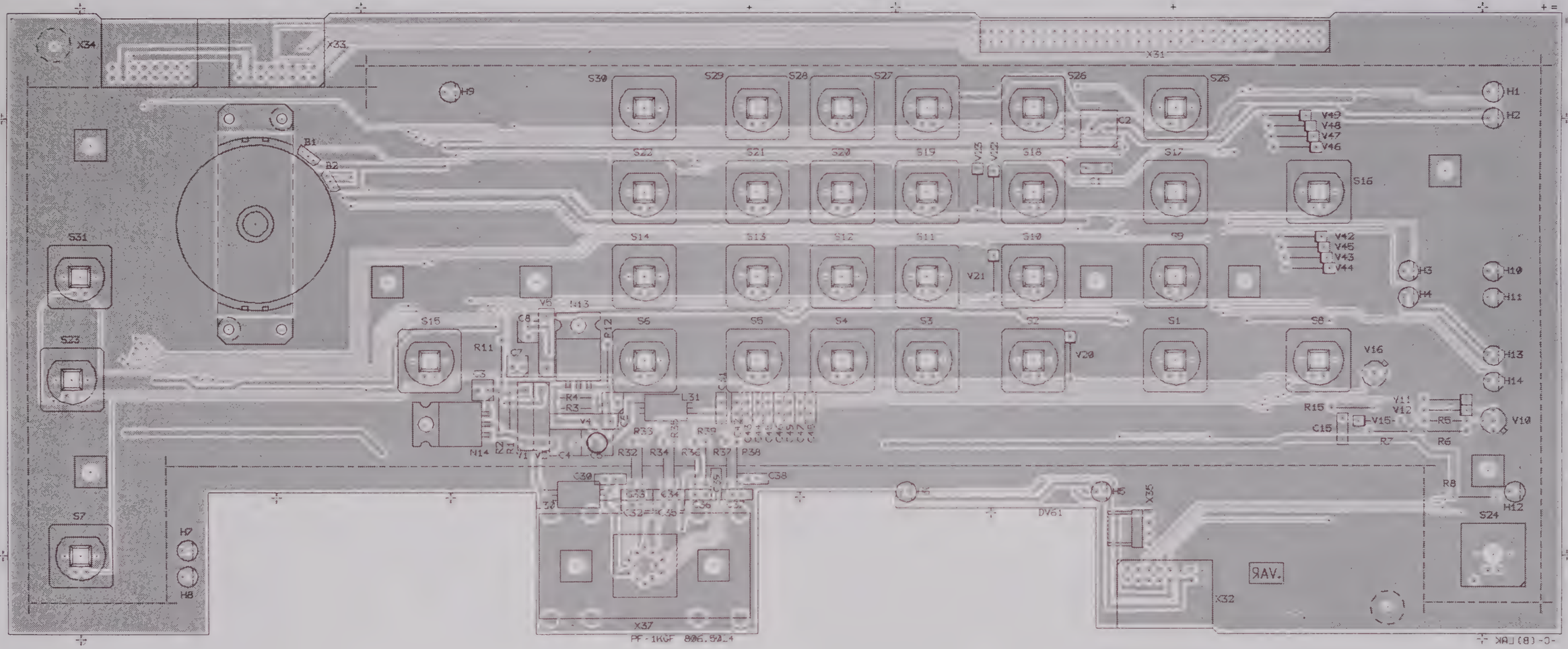

Ansicht und Leitungsführung Lötseite
View of tracks on solder side

VARIANTENERKLÄRUNG/VERSION
VAR02 – GRUNDAUSFÜHRUNG/BASIC MODEL
VAR03 – AUSFUEHRUNG FUER FSAS/MODEL FSAS
VAR04 – AUSFUEHRUNG FUER FSAS/MODEL FSAS

C		10.86	PF	Maße ohne Toleranzangabe		Maßstab 1 : 1
G	32 766	08.87	Pf			Halbzeug, Werkstoff
H	32766	12.87	PA			
				1KGF	Tag / Name	Benennung: KEYBOARD RF — Z
				Bearb	10.86 / PF	
				Gepr		
				Norm		
And	Anderungs-Mitteilung	Tag	Name	ROHDE & SCHWARZ		Zeichn-Nr 806.5018.01 ED — Blatt-Nr 3
Zust				zu Gerat FSA		reg. i V 806.4011 V — erste Z — v Bl

ROHDE&SCHWARZ

SERVICE DOCUMENTATION

Power Supply A21 (RF Unit)

808.4819.02

Contents

		Page
6	**Service Instructions Power Supply A21**	6.1
6.1	**Function Description**	6.1
6.1.1	Generation of Unregulated DC Voltages	6.2
6.1.2	Switch-on Logic	6.2
6.1.3	Reference Voltage	6.2
6.1.4	Voltage Regulators	6.3
6.2	**Testing and Adjustments**	6.4
6.3	**Troubleshooting**	6.5

Parts lists
Circuit diagrams
Component location plans

6 Service Instructions Power Supply A21 (RF Unit)

(See circuit diagrams 808.4819 S and 808.4019 S)

6.1 Function Description

This module contains the rectifier with the electrolytic capacitors for two unregulated voltages (+ 9.6 V, + 36 V) from which a total of 5 voltages (+ 5 V, + 5 V*, + 20 V, + 28 V, SWNSDC) are generated as well as its own reference voltage monitoring and the switch-on logic for the RF unit.

The transformer voltages are applied to the module via X213 The module is to a limited extent a stand-alone unit (no temperature monitoring of the heat sinks).

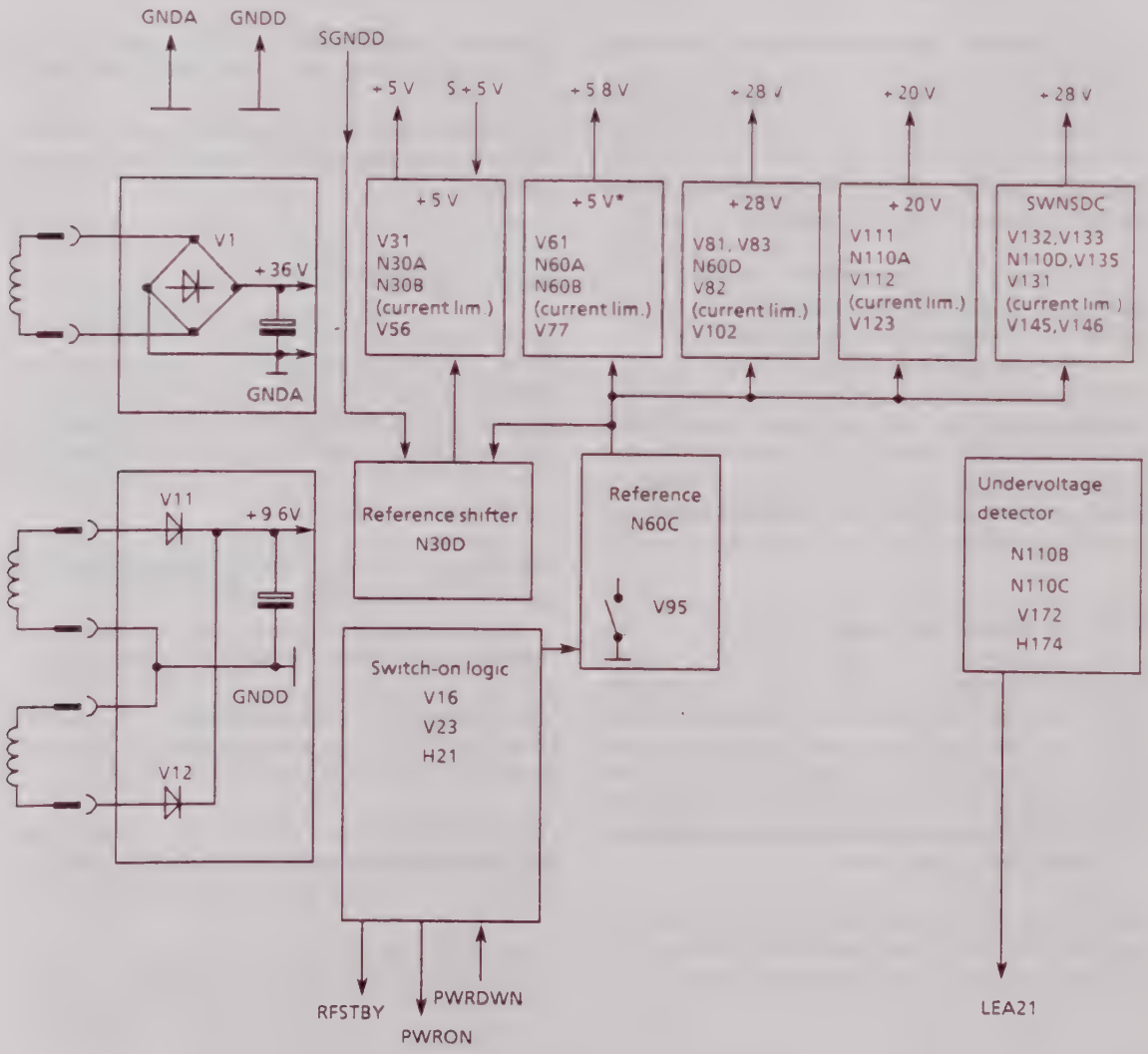

Fig. 6-1 Block diagram of the power supply module A21

6.1.1 Generation of Unregulated DC Voltages

An AC voltage fo 27.5 V is applied to the rectifier V1 via X213/1 and F1. C1 suppresses high-frequency rectifier noise. A DC voltage of approx. + 36 V is then present at the charging capacitor C2. The voltages + 28 V, + 20 V and SWNSDC (= switched noise source DC; + 28 V) are generated from this DC voltage.

An auxiliary voltage of + 27 V, from which the operational amplifier is supplied, is present at V5 and C5 via R1 to R4.

An AC voltage of 7.5 V is applied to the centre point rectifier circuit V11, V12 via X213/3,4,5,6 and F10, F12.

C11, C12 suppress high-frequency rectifier noise.

Several ground designations are used because the power supply is fitted with some sense lines. The housing of the RF unit with the ground surface of the instrument motherboard is designated "Ground analog" (GNDA).

The digital ground analog (GNDD) is a line and is connected on the motherboard to GNDA together with the ground sense line (SGNDD).

Although these connections are made during operation via the lines of the motherboard (series resistors of several mΩ), resistors R13 and R48 are provided on the module in order to guarantee defined operation and adjustment of the module without the motherboard.

6.1.2 Switch-on Logic

The RF unit is not usually switched off using the power switches at the rear of the instrument but only using the standby key on the front panel. This ensures that the temperature-controlled crystal oscillator (+ 12 V supply) is always heated and therefore attains optimum frequency stability immediately after power-up.

The various voltage regulators are therefore configured such that they have a very low output voltage by reducing the reference voltage

The standby LED on the front panel is powered via the series resistor R14.

A voltage of 5.1 V is applied to emitter V16 by R15, V15.

If the standby key is pressed the line PWRDWN (X212/2) is connected to ground and V16 switched through. (This switching state can be produced for testing by changing over jumper X190 from 2 to 3.)

The signal PWRON is output (via the motherboard to A22) by R14 via X212/18.

Caution: The PWRON signal is a wired-OR link and may also be switched to ground by nodule A22 in the event of overtemperature.

The red LED H21 (SUPPLY ERROR) is powered via R21 when switched on. In the normal operating state, the LED H21 current is drawn via V21 and V23 since transistor V23 becomes conductive via R23 as long as the PWRON signal is not taken to ground.

6.1.3 Reference Voltage

The reference voltage of this module is adjusted using R97. Since all voltages (except + 12 V, cannot be switched off) are derived from this and are programmed using fixed resistors, the reference voltage is first adjusted to a nominal value of + 10 V and a fine adjustment then carried out to + 28.00 V.

V95 blocks if the instrument is switched off and approx. + 10 V is present at N60C/8.

The generated reference voltage refers to GNDA.

The module A21 also generates + 5 V which refers to GNDD and is equipped with a ground sense line (SGNDD).

The analog subtracter (N30D, R45 to R49) transfers the reference voltage referred to GNDA to SGNDD.

6.1.4 Voltage Regulators

The voltage regulator + 5 V comprises the operational amplifier N30A and the power Darlington transistor V31 connected as an emitter follower.

The voltage is equipped with sense lines in the + branch (+ 5 V) and in the ground branch (SGNDD).

The reference voltage of + 10 V delivered by N30D/14 is divided into 5 V by the voltage divider R44, R45 and applied to the control amplifier N30A/3.

The output voltage is fed back via R40, R41 and C41, where R40 shorts the open-circuited sense line when testing or in the event of a fault and thus prevents the voltage becoming too high.

R31, C31, R32, C32 are used to correct the phase of the control loop.

The current through the load is monitored by R36. The connection of N30B results in a foldback circuit which reduces the current limitation from 2.5 A down to 0.5 A in the event of a short-circuit. The control point is reached if the voltage at N30B/7 has reached 5.65 V. V41 then conducts and N30B governs the control loop.

H55 indicates the presence of the voltage. If the output voltage is connected to a voltage with a different polarity, V39 prevents a reverse voltage larger than the diode forward voltage from occurring.

a) If the output should rise in the control unit uncontrolled as the result of a fault, the Zener diode V57 conducts above 5.6 V. if the current flowing through the diode results in a voltage drop across R57 of more than 0.7 V, thyristor V56 is fired and short-circuits the voltage which blows the quickacting fuse F30 and prevents damage to the modules as a result of overvoltages.

The voltage regulator + 5 V* delivers an output voltage of 5.84 V referred to GNDA.

The circuit is of similar design to the + 5 V circuit and only differs by R69 which forms a voltage divider together with R67.

The voltage regulator + 28 V obtains a + 10 V reference voltage via R87. N60 controls the series transistor V81 by means of V83. The voltage divider R84, R85, R86 closes the control loop.

C83 is used for dynamic negative feedback, V82 together with R81 for current limitation.

The voltage display (H101) and the overvoltage protection (V101, V105) operate in the same manner as the circuit described in a).

The voltage regulator + 20 V receives the + 10 V reference voltage via R112 of control amplifier N110A. This drives the series transistor V111 R112 amd V112 are used for current limiting and the control circuit is closed by the voltage divider R114, R115.

The voltage display (H121) and the overvoltage protection (V121, V123) operate in the same manner as the circuit described in a)

The switched noise source (SWNSDC) generates + 28 V and can be switched off by the control input (X212/8) NSON.

In the switched-off state, the reference voltage of + 10 V delivered via R143 is switched off by V146, V145.

The control circuit corresponds to that of + 28 V.

V136 is used for polarity reversal protection, V134 together with R134 and V135 produces a power Zener diode which limits overvoltages.

N110B and N110C monitor the voltages (except SWNSDC) and H174 indicates correct functioning of the module A21.

If a voltage fails or if a voltage source enters the current limitation because the current consumption is too high (= fault in instrument), V172 is switched on and the error message LEA21 passed to the IJP system. The LED H174 is switched off by V173 at the same time.

The heat sink temperature on module A22 is monitored by module A21 using V200.

6.2 Testing and Adjustment

As already mentioned in the function description, all voltages are derived from the + 10 V reference voltage and depend on its adjustment.

The 28-V supply is factory-set to ± 0.1 % using the reference voltage. An aging error of ± 2 % is permissible for the 28 V.

Caution: Adjustment of R97 changes all voltages by the same percentage.

The output voltages should have the following tolerances following the adjustment:

+ 5 V ± 2 % (measured at sense point)
+ 5 V* ≙ 5.84 V ± 2 %
+ 28 V ± 1 %
SWNSDC + 28 V ± 2 % ON / <0.5 V OFF
+ 20 V ± 2 %

Note: If a voltage exceeds the tolerance limits when the + 28 V is adjusted, an adjustment is also permissible whilst all other voltages are within the tolerances.

6.3 Troubleshooting

The instrument does not respond on power-up.

- Check AC supply and fuse.
- Check that the power-on command reaches the module (PWRDWN must be Low at X212/2).

  If the signal is High, the power-on command can be simulated by the jumper X190/1 and 2 (test position).
- If the above-mentioned measures are not successful, the voltages at the charging capacitors C13, C14 and C2, as well as the voltages at cathode V15 and at N60C/8 (+10 V reference) must be checked. The latter is switched by V95.

Only the red LED lights up and possibly the blowers are working.

- The 2nd blower in the instrument is not plugged in or is faulty. The long-term timer in the module A22 takes the PWRON signal (X212/20) to ground.

  If the long-term timer has switched off the power supply, the instrument must be switched off on the rear panel. The instrument can only be switched on again when all internal capacitors have been discharged. The waiting time is up to 10 minutes and prevents overheating of the instrument by frequent switching off and on in the event of a fault.
- An overtemperature fault is present. The blowers rotate at medium speed in this case, the output voltages are switched off. The instrument switches itself on again when cooled down.

The instrument can be switched on, but the green LED does not light up.

- Check missing voltages using the yellow LEDs. If all LEDs light up, check the tolerances of the voltages using a voltmeter.

Possible causes for a missing voltage:

- Current drain in instrument is too high, or a module is faulty.

  In this case disconnect the modules in succession from the power supply by pulling out and then switch the instrument on again. The faulty module can then be determined.
- The overvoltage protection has been triggered. A short-circuit may be present on a module, or the series regulator or control is faulty.

  The voltage usually then enters the current limitation unless the series transistor is faulty and the fuse is blown.
- A short-circuit is present in the instrument with a voltage of the opposite polarity. The current then flows via the polarity protection diode.

Refer to the circuit description if it can be assumed that components are suspect within the module.

ROHDE&SCHWARZ

Schaltteillisten
Stromläufe
Bestückungspläne
Part lists
Circuit diagrams
Components plans
Listes des pièces détachées
Schémas de Circuit
Plans des composants

(R 29500 Bl 2)
895.1000 Bl. 2

Kennz. Comp.No.	Benennung Designation	Sachnummer Stock No.	Hersteller Manufacturer	Bezeichnung Designation	enthalten in contained in
.	ZUGEH.STROML./CIRC.DIAGR. 808.4819 S				
C1	CK 470NF+-20%100VQUADER PLASTIC-FOIL CAPACITOR	CK 006.5079	ROEDERST	MKT1822-447/0	
C2	CE 2,2MF+-20%63V RD25X35 ELECTROLYTIC CAPACITOR	808.4860	VALVO	2222-051-58222	
C5	CE 22UF-10+50% 63V 9X13 ELECTROLYTIC CAPACITOR	CE 006.7120	ROEDERST	EK 00 CB 222 J	
C11	CK 1UF+-10%50V5RM MKT CAPACITOR	CK 099.2998	WIMA	MKS2/50/1UF/10%	
C12	CK 1UF+-10%50V5RM MKT CAPACITOR	CK 099.2998	WIMA	MKS2/50/1UF/10%	
C13	CE 15MF+-20%16V RD30X45 ELECTROLYTIC CAPACITOR	808.4854	VALVO	2222-051-55153	
C14	CE 15MF+-20%16V RD30X45 ELECTROLYTIC CAPACITOR	808.4854	VALVO	2222-051-55153	
C31	CK 1UF+-10%50V5RM MKT CAPACITOR	CK 099.2998	WIMA	MKS2/50/1UF/10%	
C32	CK 100NF+-5%63V5RM MKT CAPACITOR	CK 099.2930	WIMA	MKS/2/63/0.1UF/5%	
C38	CK 100NF+-5%63V5RM MKT CAPACITOR	CK 099.2930	WIMA	MKS/2/63/0.1UF/5%	
C39	CE 47UF-10+50% 40V 9X13 ELECTROLYTIC CAPACITOR	CE 006.7142	ROEDERST	EK 00 CB 247 G	
C41	CK 100NF+-5%63V5RM MKT CAPACITOR	CK 099.2930	WIMA	MKS/2/63/0.1UF/5%	
C61	CK 1UF+-10%50V5RM MKT CAPACITOR	CK 099.2998	WIMA	MKS2/50/1UF/10%	
C62	CK 100NF+-5%63V5RM MKT CAPACITOR	CK 099.2930	WIMA	MKS/2/63/0.1UF/5%	
C66	CK 100NF+-5%63V5RM MKT CAPACITOR	CK 099.2930	WIMA	MKS/2/63/0.1UF/5%	
C67	CK 100NF+-5%63V5RM MKT CAPACITOR	CK 099.2930	WIMA	MKS/2/63/0.1UF/5%	
C68	CE 47UF-10+50% 40V 9X13 ELECTROLYTIC CAPACITOR	CE 006.7142	ROEDERST	EK 00 CB 247 G	
C83	CK 1UF+-10%50V5RM MKT CAPACITOR	CK 099.2998	WIMA	MKS2/50/1UF/10%	
C84	CE 22UF-10+50% 63V 9X13 ELECTROLYTIC CAPACITOR	CE 006.7120	ROEDERST	EK 00 CB 222 J	
C85	CK 100NF+-5%63V5RM MKT CAPACITOR	CK 099.2930	WIMA	MKS/2/63/0.1UF/5%	
C91	CC 100NF+-10%50V5K1200VIE CAPACITOR	CC 084.5350	UNION CARB	CK05BX104K	
C95	CK 100NF+-5%63V5RM MKT CAPACITOR	CK 099.2930	WIMA	MKS/2/63/0.1UF/5%	
C111	CK 100NF+-5%63V5RM MKT CAPACITOR	CK 099.2930	WIMA	MKS/2/63/0.1UF/5%	
C114	CK 100NF+-5%63V5RM MKT CAPACITOR	CK 099.2930	WIMA	MKS/2/63/0.1UF/5%	
C116	CE 22UF-10+50% 63V 9X13 ELECTROLYTIC CAPACITOR	CE 006.7120	ROEDERST	EK 00 CB 222 J	
C133	CC 100PF+-2%6X9NP0 CAPACITOR	CC 087.6541	VALVO	2222 678 10101	
C138	CC 220PF+-2%6X7N750 CAPACITOR	CC 087.6941	VALVO	2222 678 58221	
C140	CC 270PF+-2%6X9N750 CAPACITOR	CC 087.6958	DRALORIC	EDPU6X9/270/2%N750	
F1	SS SCHMELZS.M 1C DIN41571 FUSE	SS 020.7430	WICKMANN	M1CDIN41571TROP.	
F10	SS SCHMELZS.M4 E DIN41571 FUSE	SS 020.7598	WICKMANN	M4EDIN41571TROP	
F12	SS SCHMELZS.M4 E DIN41571 FUSE	SS 020.7598	WICKMANN	M4EDIN41571TROP	
F30	SS SCHMELZS.F2,5 DIN41660 FUSE	SS 020.7552	WICKMANN	F 2,5 DIN 41660	
F60	SS SCHMELZS.F2,5 DIN41660 FUSE	SS 020.7552	WICKMANN	F 2,5 DIN 41660	
F80	SS SCHMELZS.F800 DIN41661 FUSE	SS 020.7398	WICKMANN	F 0,8 DIN41661 TROP	
F110	SS SCHMELZS.F250 DIN41661 FUSE	SS 020.7246	WICKMANN	F 0,25 DIN41661 TROP	
H21	AF HLMP3301 LED RT RD5 LED	AF 092.8710	HEWLETT PA	HLMP3301	

Für diese Unterlage behalten ... ns alle Rechte vo...

Kennz. Comp.No.	Benennung Designation	Sachnummer Stock No.	Hersteller Manufacturer	Bezeichnung Designation	enthalten in contained in
H55	AF HLMP1401 LED GE RD3 LED	AF 235.4604	GEN.INSTR.	HLMP1401-20/21	
H75	AF HLMP1401 LED GE RD3 LED	AF 235.4604	GEN.INSTR.	HLMP1401-20/21	
H101	AF HLMP1401 LED GE RD3 LED	AF 235.4604	GEN.INSTR.	HLMP1401-20/21	
H121	AF HLMP1401 LED GE RD3 LED	AF 235.4604	GEN.INSTR.	HLMP1401-20/21	
H150	AF HLMP1401 LED GE RD3 LED	AF 235.4604	GEN.INSTR.	HLMP1401-20/21	
H174	AF HLMP3502 LED GN RD5 LED	AF 235.4862	HEWLETT	HLMP3502	
N30	BO LM124J 4XL.P.OPAMP OPERATIONAL AMPLIFIER	300.6353	NSC	LM124J	
N60	BO LM124J 4XL.P.OPAMP OPERATIONAL AMPLIFIER	300.6353	NSC	LM124J	
N110	BO LM124J 4XL.P.OPAMP OPERATIONAL AMPLIFIER	300.6353	NSC	LM124J	
R1	RL 0,35W 1,82KOHM+-1%TK50 RESISTOR	RL 082.2277	DRALORIC	SMA0207/1,82K-F-C	
R2 ..4	RL 0,35W 1,82KOHM+-1%TK50 RESISTOR	RL 082.2277	DRALORIC	SMA0207/1,82K-F-C	
R13	RD 2.4W 1 OHM +-3% WIRE WOUND RESISTOR	RD 069.1441	SAGE	S1200/1OHM/3%TK20	
R14	RL 0,35W 392 OHM+-1%TK50 RESISTOR	RL 082.2183	DRALORIC	SMA0207/392K-F-C	
R15	RL 0,35W 121 OHM+-1%TK50 RESISTOR	RL 082.9859	DRALORIC	SMA0207/1210HM-F-D	
R16	RL 0,35W 1KOHM+-1%TK50 RESISTOR	RL 082.2160	DRALORIC	SMA0207/1K-F-C	
R17	RL 0,35W 1KOHM+-1%TK50 RESISTOR	RL 082.2160	DRALORIC	SMA0207/1K-F-C	
R18	RL 0,35W 681 OHM+-1%TK50 RESISTOR	RL 083.0490	DRALORIC	SMA0207/6810HM-F-D	
R19	RL 0,35W 3,32KOHM+-1%TK50 RESISTOR	RL 083.0990	DRALORIC	SMA0207/3.32K-F-D	
R21	RL 0,35W 475 OHM+-1%TK50 RESISTOR	RL 083.0390	DRALORIC	SMA0207/4750HM-F-D	
R22	RL 0,35W 10,0KOHM+-1%TK50 RESISTOR	RL 083.1297	DRALORIC	SMA0207/10K-F-D	
R23	RL 0,35W 39,2KOHM+-1%TK50 RESISTOR	RL 083.1745	DRALORIC	SMA/207/39,2K-F-C	
R24	RL 0,35W 22,1KOHM+-1%TK50 RESISTOR	RL 083.1545	DRALORIC	SMA/207/22,1K-F-C	
R31	RL 0,35W 10,0 OHM+-1%TK50 RESISTOR	RL 082.8852	DRALORIC	SMA0207/100HM-F-D	
R32	RL 0,35W 475 OHM+-1%TK50 RESISTOR	RL 083.0390	DRALORIC	SMA0207/4750HM-F-D	
R33	RL 0,35W 3,92KOHM+-1%TK50 RESISTOR	RL 083.1039	RESISTA	MK2	
R34	RL 0,35W 100KOHM+-1%TK50 RESISTOR	RL 082.1764	DRALORIC	SMA0207/100K-F-C	
R35	RL 0,35W 221 KOHM+-1%TK50 RESISTOR	RL 083.2270	DRALORIC	SMA0207/221K-F-C	
R36	RD 0,8W 47 MIOHM+-3% WIRE-WOUND RESISTOR	RD 069.1458	SAGE	1000S/0,040HM/3%	
R37	RL 0,35W 3,92KOHM+-1%TK50 RESISTOR	RL 083.1039	RESISTA	MK2	
R38	RL 0,35W 100KOHM+-1%TK50 RESISTOR	RL 082.1764	DRALORIC	SMA0207/100K-F-C	
R39	RL 0,35W 10,0KOHM+-1%TK50 RESISTOR	RL 083.1297	DRALORIC	SMA0207/10K-F-D	
R40	RL 0,35W 274 OHM+-1%TK50 RESISTOR	RL 083.0178	DRALORIC	SMA0207/2740HM-F-D	
R41	RL 0,35W 4,75KOHM+-1%TK50 RESISTOR	RL 083.1097	DRALORIC	SMA0207/4,75K-F-D	
R43	RL 0,35W 10,0KOHM+-1%TK50 RESISTOR	RL 083.1297	DRALORIC	SMA0207/10K-F-D	
R44	RL 0,35W 10,0KOHM+-1%TK50 RESISTOR	RL 083.1297	DRALORIC	SMA0207/10K-F-D	
R45	RL 0,35W 100KOHM+-1%TK50 RESISTOR	RL 082.1764	DRALORIC	SMA0207/100K-F-C	
R46	RL 0,35W 100KOHM+-1%TK50 RESISTOR	RL 082.1764	DRALORIC	SMA0207/100K-F-C	
R47	RL 0,35W 100KOHM+-1%TK50 RESISTOR	RL 082.1764	DRALORIC	SMA0207/100K-F-C	

Kennz. Comp.No.	Benennung Designation	Sachnummer Stock No.	Hersteller Manufacturer	Bezeichnung Designation	enthalten in contained in
R48	RL 0,35W 82,5 OHM+-1%TK50 RESISTOR	RL 082.9707	DRALORIC	SMA0207/82,5OHM-F-D	
R49	RL 0,35W 100KOHM+-1%TK50 RESISTOR	RL 082.1764	DRALORIC	SMA0207/100K-F-C	
R55	RL 0,35W 274 OHM+-1%TK50 RESISTOR	RL 083.0178	DRALORIC	SMA0207/274OHM-F-D	
R56	RL 0,35W 10,0 OHM+-1%TK50 RESISTOR	RL 082.8852	DRALORIC	SMA0207/10OHM-F-D	
R57	RL 0,35W 100 OHM+-1%TK50 METALFILM-RESISTOR	RL 082.6543	DRALORIC	SMA0207/100/HM-F-D	
R60	RL 0,35W 121KOHM+-1%TK50 RESISTOR	RL 083.2070	DRALORIC	SMA/207/121K-F-C	
R61	RL 0,35W 10,0 OHM+-1%TK50 RESISTOR	RL 082.8852	DRALORIC	SMA0207/10OHM-F-D	
R62	RL 0,35W 475 OHM+-1%TK50 RESISTOR	RL 083.0390	DRALORIC	SMA0207/475OHM-F-D	
R63	RD 0,8W 47 MIOHM+-3% WIRE-WOUND RESISTOR	RD 069.1458	SAGE	1000S/0,040HM/3%	
R64	RL 0,35W 3,92KOHM+-1%TK50 RESISTOR	RL 083.1039	RESISTA	MK2	
R65	RL 0,35W 3,92KOHM+-1%TK50 RESISTOR	RL 083.1039	RESISTA	MK2	
R66	RL 0,35W 100KOHM+-1%TK50 RESISTOR	RL 082.1764	DRALORIC	SMA0207/100K-F-C	
R67	RL 0,35W 4,75KOHM+-1%TK50 RESISTOR	RL 083.1097	DRALORIC	SMA0207/4,75K-F-D	
R69	RL 0,35W 39,2KOHM+-1%TK50 RESISTOR	RL 083.1745	DRALORIC	SMA/207/39,2K-F-C	
R70	RL 0,35W 10,0KOHM+-1%TK50 RESISTOR	RL 083.1297	DRALORIC	SMA0207/10K-F-D	
R71	RL 0,35W 10,0KOHM+-1%TK50 RESISTOR	RL 083.1297	DRALORIC	SMA0207/10K-F-D	
R72	RL 0,35W 100KOHM+-1%TK50 RESISTOR	RL 082.1764	DRALORIC	SMA0207/100K-F-C	
R73	RL 0,35W 221 KOHM+-1%TK50 RESISTOR	RL 083.2270	DRALORIC	SMA0207/221K-F-C	
R75	RL 0,35W 332 OHM+-1%TK50 RESISTOR	RL 083.0255	DRALORIC	SMA0207/332OHM-F-D	
R76	RL 0,35W 100 OHM+-1%TK50 METALFILM-RESISTOR	RL 082.6543	DRALORIC	SMA0207/100/HM-F-D	
R77	RL 0,35W 10,0 OHM+-1%TK50 RESISTOR	RL 082.8852	DRALORIC	SMA0207/10OHM-F-D	
R81	RL 0,35W 1,50OHM+-1%TK50 METALFILMRESISTOR NUR VAR/ONLY MOD: 03	RL 099.7902	RESISTA	MK2 1,50 OHM 1% TK50	
R81	RL 0,35W1,82 OHM+-1%TK50 METALFILMRESISTOR NUR VAR/ONLY MOD: 02	RL 099.7925	RESISTA	MK2 1,82 OHM 1% TK50	
R82	RL 0,35W 1KOHM+-1%TK50 RESISTOR	RL 082.2160	DRALORIC	SMA0207/1K-F-C	
R83	RL 0,35W 1,21KOHM+-1%TK50 RESISTOR	RL 083.0655	DRALORIC	SMA0207/1,21K-F-D	
R84	RL 0,35W1,50MOHM+-1%TK50 METALFILMRESISTOR	RL 099.8138	RESISTA	MK2 1,50MOHM 1% TK50	
R85	RL 0,35W 18,2KOHM+-1%TK50 RESISTOR	RL 083.1480	DRALORIC	SMA/207/18,2K-F-C	
R86	RL 0,35W 10,0KOHM+-1%TK50 RESISTOR	RL 083.1297	DRALORIC	SMA0207/10K-F-D	
R87	RL 0,35W 6,81KOHM+-1%TK50 RESISTOR	RL 082.2560	DRALORIC	SMA 0207/6,81K-F-C	
R88	RL 0,35W 10,0KOHM+-1%TK50 RESISTOR	RL 083.1297	DRALORIC	SMA0207/10K-F-D	
R89	RL 0,35W 10,0KOHM+-1%TK50 RESISTOR	RL 083.1297	DRALORIC	SMA0207/10K-F-D	
R90	RL 0,35W 10,0KOHM+-1%TK50 RESISTOR	RL 083.1297	DRALORIC	SMA0207/10K-F-D	
R91	RL 0,35W 6,81KOHM+-1%TK50 RESISTOR	RL 082.2560	DRALORIC	SMA 0207/6,81K-F-C	
R92	RL 0,35W 4,75KOHM+-1%TK50 RESISTOR	RL 083.1097	DRALORIC	SMA0207/4,75K-F-D	
R93	RL 0,35W 562 OHM+-1%TK50 RESISTOR	RL 083.0461	DRALORIC	SMA0207/562OHM-F-D	
R94	RL 0,35W 3,92KOHM+-1%TK50 RESISTOR	RL 083.1039	RESISTA	MK2	
R95	RL 0,35W 4,75KOHM+-1%TK50 RESISTOR	RL 083.1097	DRALORIC	SMA0207/4,75K-F-D	
R96	RL 0,35W 8,25KOHM+-1%TK50 RESISTOR	RL 083.1239	DRALORIC	SMA0207/8,25K-F-D	

Kennz. Comp.No.	Benennung Designation	Sachnummer Stock No.	Hersteller Manufacturer	Bezeichnung Designation	enthalten in contained in
R97	RS 0,75W 5KOHM+-10%CERMET DEPOS.-CARBON POTENTIOMET	RS 037.7380	BOURNS	3006P-1-5 KOHM+-10%	
R101	RL 0,35W 2,74KOHM+-1%TK50 RESISTOR	RL 083.0926	DRALORIC	SMA0207/2,74K-F-D	
R102	RL 0,35W 10,0 OHM+-1%TK50 RESISTOR	RL 082.8852	DRALORIC	SMA0207/10OHM-F-D	
R103	RL 0,35W 475 OHM+-1%TK50 RESISTOR	RL 083.0390	DRALORIC	SMA0207/475OHM-F-D	
R111	RL 0,35W 100 OHM+-1%TK50 METALFILM-RESISTOR	RL 082.6543	DRALORIC	SMA0207/100/HM-F-D	
R112	RL 0,35W 4,75KOHM+-1%TK50 RESISTOR	RL 083.1097	DRALORIC	SMA0207/4,75K-F-D	
R113	RL 0,35W3,32 OHM+-1%TK50 METALFILMRESISTOR NUR VAR/ONLY MOD: 02	RL 099.7983	RESISTA	MK2 3,32 OHM 1% TK50	
R113	RL 0,35W 2,74 OHM+-1%TK50 METALFILMRESISTOR NUR VAR/ONLY MOD: 03	RL 099.8973	RESISTA	MK2 2,74 OHM+-1%TK50	
R114	RL 0,35W 10,0KOHM+-1%TK50 RESISTOR	RL 083.1297	DRALORIC	SMA0207/10K-F-D	
R115	RL 0,35W 10,0KOHM+-1%TK50 RESISTOR	RL 083.1297	DRALORIC	SMA0207/10K-F-D	
R121	RL 0,35W 1,82KOHM+-1%TK50 RESISTOR	RL 082.2277	DRALORIC	SMA0207/1,82K-F-C	
R122	RL 0,35W 332 OHM+-1%TK50 RESISTOR	RL 083.0255	DRALORIC	SMA0207/332OHM-F-D	
R123	RL 0,35W 10,0 OHM+-1%TK50 RESISTOR	RL 082.8852	DRALORIC	SMA0207/10OHM-F-D	
R131	RL 0,35W6,81 OHM+-1%TK50 METALFILMRESISTOR NUR VAR/ONLY MOD: 02	RL 099.8067	RESISTA	MK2 6,81 OHM 1% TK50	
R131	RL 0,35W6,19 OHM+-1%TK50 METALFILMRESISTOR NUR VAR/ONLY MOD: 03	RL 099.8050	RESISTA	MK2 6,19 OHM 1% TK50	
R132	RL 0,35W 1KOHM+-1%TK50 RESISTOR	RL 082.2160	DRALORIC	SMA0207/1K-F-C	
R133	RL 0,35W 2,74KOHM+-1%TK50 RESISTOR	RL 083.0926	DRALORIC	SMA0207/2,74K-F-D	
R134	RL 0,35W 100 OHM+-1%TK50 METALFILM-RESISTOR	RL 082.6543	DRALORIC	SMA0207/100/HM-F-D	
R137	RL 0,35W1,50MOHM+-1%TK50 METALFILMRESISTOR	RL 099.8138	RESISTA	MK2 1,50MOHM 1% TK50	
R138	RL 0,35W 18,2KOHM+-1%TK50 RESISTOR	RL 083.1480	DRALORIC	SMA/207/18,2K-F-C	
R139	RL 0,35W 10,0KOHM+-1%TK50 RESISTOR	RL 083.1297	DRALORIC	SMA0207/10K-F-D	
R140	RL 0,35W 10,0KOHM+-1%TK50 RESISTOR	RL 083.1297	DRALORIC	SMA0207/10K-F-D	
R141	RL 0,35W 10,0KOHM+-1%TK50 RESISTOR	RL 083.1297	DRALORIC	SMA0207/10K-F-D	
R142	RL 0,35W 4,75KOHM+-1%TK50 RESISTOR	RL 083.1097	DRALORIC	SMA0207/4,75K-F-D	
R143	RL 0,35W 4,75KOHM+-1%TK50 RESISTOR	RL 083.1097	DRALORIC	SMA0207/4,75K-F-D	
R145	RL 0,35W 10,0KOHM+-1%TK50 RESISTOR	RL 083.1297	DRALORIC	SMA0207/10K-F-D	
R146	RL 0,35W 3,32KOHM+-1%TK50 RESISTOR	RL 083.0990	DRALORIC	SMA0207/3,32K-F-D	
R147	RL 0,35W 10,0KOHM+-1%TK50 RESISTOR	RL 083.1297	DRALORIC	SMA0207/10K-F-D	
R148	RL 0,35W 3,32KOHM+-1%TK50 RESISTOR	RL 083.0990	DRALORIC	SMA0207/3,32K-F-D	
R150	RL 0,35W 2,74KOHM+-1%TK50 RESISTOR	RL 083.0926	DRALORIC	SMA0207/2,74K-F-D	
R160	RL 0,35W 33,2KOHM+-1%TK50 RESISTOR	RL 083.1674	DRALORIC	SMA0207/33,2K-F-C	
R161	RL 0,35W 18,2KOHM+-1%TK50 RESISTOR	RL 083.1480	DRALORIC	SMA/207/18,2K-F-C	
R162	RL 0,35W 10,0KOHM+-1%TK50 RESISTOR	RL 083.1297	DRALORIC	SMA0207/10K-F-D	
R164	RL 0,35W 3,32KOHM+-1%TK50 RESISTOR	RL 083.0990	DRALORIC	SMA0207/3.32K-F-D	
R165	RL 0,35W 10,0KOHM+-1%TK50 RESISTOR	RL 083.1297	DRALORIC	SMA0207/10K-F-D	
R166	RL 0,35W 22,1KOHM+-1%TK50 RESISTOR	RL 083.1545	DRALORIC	SMA/207/22,1K-F-C	
R167	RL 0,35W 18,2KOHM+-1%TK50 RESISTOR	RL 083.1480	DRALORIC	SMA/207/18,2K-F-C	

Kennz. Comp.No.	Benennung Designation	Sachnummer Stock No.	Hersteller Manufacturer	Bezeichnung Designation	enthalten in contained in
R168	RL 0,35W 10,0KOHM+-1%TK50 RESISTOR	RL 083.1297	DRALORIC	SMA0207/10K-F-D	
R171	RL 0,35W 22,1KOHM+-1%TK50 RESISTOR	RL 083.1545	DRALORIC	SMA/207/22,1K-F-C	
R172	RL 0,35W 4,75KOHM+-1%TK50 RESISTOR	RL 083.1097	DRALORIC	SMA0207/4,75K-F-D	
R173	RL 0,35W 10,0KOHM+-1%TK50 RESISTOR	RL 083.1297	DRALORIC	SMA0207/10K-F-D	
R174	RL 0,35W 274 OHM+-1%TK50 RESISTOR	RL 083.0178	DRALORIC	SMA0207/274OHM-F-D	
R180	RL 0,35W 10,0 OHM+-1%TK50 RESISTOR	RL 082.8852	DRALORIC	SMA0207/100HM-F-D	
V1	AG B250C1500 BRGL RECTIFIER	AG 208.2340	AEG-TELEF.	B250/C1500SI	
V5	AE BZX85/C27 1,3W ZDI ZENER DIODE	AE 092.8355	THOMSON	BZX85/C27	
V11	AG SBS1645 SGL 45V 12AO RECTIFIER	AG 355.0057	GEN.INSTRU	SBS1645	
V12	AG SBS1645 SGL 45V 12AO RECTIFIER	AG 355.0057	GEN.INSTRU	SBS1645	
V14	AD 1N4448 75V 0A15 UDI DIODE	AD 012.0700	TEXAS INST	1N4448 GEGURTET	
V15	AE BZX79/C5V1 0,5W ZDI ZENER DIODE	AE 012.2449	AEG	BZX55/C5V1	
V16	AK BCY79IX P 45V 200MA TRANSISTOR	AK 010.3777	VALVO	BCY79IX	
V21	AD 1N4448 75V 0A15 UDI DIODE	AD 012.0700	TEXAS INST	1N4448 GEGURTET	
V23	AK BCY59IX N 45V 200MA TRANSISTOR	AK 010.5163	VALVO	BCY59IX	
V31	AL BDX33B N 80V DARL TRANSISTOR	AL 092.9322	RCA	BDX33B	
V39	AG BY251 GL 200V 3AO RECTIFIER	AG 250.3128	INTERMETAL	BY251	
V41	AD 1N4448 75V 0A15 UDI DIODE	AD 012.0700	TEXAS INST	1N4448 GEGURTET	
V56	AG TIC126S THY700V12AO THYRISTOR	AG 553.0397	TEXAS INST	TIC126S	
V57	AE BZX79/B5V6 0,5W ZDI ZENER DIODE	AE 012.5254	VALVO	BZX79/B5V6	
V61	AL BDX33B N 80V DARL TRANSISTOR	AL 092.9322	RCA	BDX33B	
V67	AD 1N4448 75V 0A15 UDI DIODE	AD 012.0700	TEXAS INST	1N4448 GEGURTET	
V68	AG BY251 GL 200V 3AO RECTIFIER	AG 250.3128	INTERMETAL	BY251	
V76	AE BZX55/B6V2 0,5W ZDI ZENER DIODE	AE 012.2161	VALVO	BZX55/B6V2	
V77	AG TIC126S THY700V12AO THYRISTOR	AG 553.0397	TEXAS INST	TIC126S	
V81	AL BDX78 P 80V 8AO TRANSISTOR	AL 284.4562	VALVO	BDX78	
V82	AK BCY79IX P 45V 200MA TRANSISTOR	AK 010.3777	VALVO	BCY79IX	
V83	AK BCY59IX N 45V 200MA TRANSISTOR	AK 010.5163	VALVO	BCY59IX	
V84	AG 1N4007 GL1000V 1AO RECTIFIER	AG 013.0310	AEG-TELEF	1N4007	
V85	AD 1N4448 75V 0A15 UDI DIODE	AD 012.0700	TEXAS INST	1N4448 GEGURTET	
V93	AE 1N827 6,2V REFDI REFERENCE DIODE	AE 418.0029	CDI	1N827	
V95	AK BCY59IX N 45V 200MA TRANSISTOR	AK 010.5163	VALVO	BCY59IX	
V101	AE BZX85/B30 1.3W ZDI ZENER DIODE	514.8555	TELEFUNKEN	BZX85/B30	
V102	AG TIC126S THY700V12AO THYRISTOR	AG 553.0397	TEXAS INST	TIC126S	
V111	AL BDX77 N 80V 8AO TRANSISTOR	AL 300.6318	VALVO	BDX77	
V112	AK BCY59IX N 45V 200MA TRANSISTOR	AK 010.5163	VALVO	BCY59IX	
V116	AG 1N4007 GL1000V 1AO RECTIFIER	AG 013.0310	AEG-TELEF	1N4007	
V121	AE BZX55/B22 0,5W ZDI ZENER DIODE	AE 349.3006	VALVO	BZX79/B22	

Für diese Unterlage behalten wir
e alles alle Rechte vor

Kennz. Comp.No.	Benennung Designation	Sachnummer Stock No.	Hersteller Manufacturer	Bezeichnung Designation	enthalten in contained in
V123	AG TIC126S THY700V12AO THYRISTOR	AG 553.0397	TEXAS INST	TIC126S	
V131	AK BCY79IX P 45V 200MA TRANSISTOR	AK 010.3777	VALVO	BCY79IX	
V132	AL BDX78 P 80V 8AO TRANSISTOR	AL 284.4562	VALVO	BDX78	
V133	AK BCY59IX N 45V 200MA TRANSISTOR	AK 010.5163	VALVO	BCY59IX	
V134	AE BZX85/B30 1.3W ZDI ZENER DIODE	514.8555	TELEFUNKEN	BZX85/B30	
V135	AL BDX77 N 80V 8AO TRANSISTOR	AL 300.6318	VALVO	BDX77	
V136	AG 1N4007 GL1000V 1AO RECTIFIER	AG 013.0310	AEG-TELEF	1N4007	
V145	AK BCY59IX N 45V 200MA TRANSISTOR	AK 010.5163	VALVO	BCY59IX	
V146	AK BCY59IX N 45V 200MA TRANSISTOR	AK 010.5163	VALVO	BCY59IX	
V163	AD 1N4448 75V 0A15 UDI DIODE	AD 012.0700	TEXAS INST	1N4448 GEGURTET	
V164	AD 1N4448 75V 0A15 UDI DIODE	AD 012.0700	TEXAS INST	1N4448 GEGURTET	
V172	AK BCY59IX N 45V 200MA TRANSISTOR	AK 010.5163	VALVO	BCY59IX	
V173	AD 1N4448 75V 0A15 UDI DIODE	AD 012.0700	TEXAS INST	1N4448 GEGURTET	
V200	BJ LM335H TEMP.SENSOR PRECION TEMP.SENSOR	395.2867	NSC	LM335H	
X190	FP WINKELSTECKERLEIST.36P ANGLE PIN CONNECTOR	FP 243.3578	BINDER	742-5-11-0187-00-36	
X211	FP EINLOETSTECKER 9POL CONNECTOR 9POL	681.1150	AMP	350712-1	
X212	FP LP-STECKER 2REIH.20W PCB CONNECTOR,20 CONTACT	805.8936			
X213	FP EINLOETBUCHSE 6P CONNECTOR 6P	808.4877	AMP	350827-1	
					- ENDE -

Kennz. Comp.No.	Benennung Designation	Sachnummer Stock No.	Hersteller Manufacturer	Bezeichnung Designation	enthalten in contained in
A21	ED POWER SUPPLY RF-A21 POWER SUPPLY NUR VAR/ONLY MOD: 02 HIERZU STROML.808.4819 S SEE CIRC DIAGR.808.4819 S	808.4819.02			
A21	ED POWER SUPPLY RF-A21 NUR VAR/ONLY MOD: 03 HIERZU STROML.808.4819 S SEE CIRC DIAGR.808.4819 S	808.4819.03			
A22	ED POWER SUPPLY RF-A22 POWER SUPPLY NUR VAR/ONLY MOD: 02 HIERZU STROML.808.4819 S SEE CIRC.DIAGR.808.4819 S	808.4519.02			
A22	ED POWER SUPPLY RF-A22 NUR VAR/ONLY MOD: 03 HIERZU STROML.8084819 S SEE CIRC.DIAGR.808.4819 S	806.4519.03			
E1	ZE LUEFTER FAN	808.4177			
F1	SS SCHMELZS.T2.5DDIN41571 FUSE FUER/FOR 220/240V FUER/FOR 100/120V SS020.7600	SS 020.7575	WICKMANN	T2.5D DIN 41571 TROP	
R1	RK VARISTOR 35-540V/1KA VARISTOR	808 4202	CONRADTY	CONOX [illegible] 130 VB	F
R1	RK VARISTOR 35-540V/1KA VARISTOR	808 4202	CONRADTY	CONOX [illegible] 130 VB	808.4425
R2	RK VARISTOR 35-540V/1KA VARISTOR	808.4202	CONRADTY	CONOX [illegible] 130 VB	F
R2	RK VARISTOR 35-540V/1KA VARISTOR	808.4202	CONRADTY	CONOX [illegible] 130 VB	808.4425
S1	SK WIPPSCH.2POL.AUS SW SWITCH	SK 553.2925	MARQUARDT	1802.1102	
T1	ZE TRANSFORMATOR TRANSFORMER	808.4131			
X1	FN NETZFILT.M.SPANNUNGSW. FILTER	FN 099.3313	HEGNER&GLA	HGN369-2	
X213	FP STECKGEHAEUSE 6POL. CONNECTORHOUSING 6POL	805.7800	AMP	350 715-1	808.4131
X223	FP KUPPLUNGSGEHAEUSE 4POL CONNECTOR 4POL	808.4660	AMP	350779-1	808.4131
					- ENDE -

Für diese Unterlage behalten wir uns alle Rechte vor

Für diese Unterlage behalten
s alle Rechte vor

+5V-SUPPLY

+5V*-SUPPLY

POWER ON CONTROL

REFERENCE VOLTAGE

X191 JUMPER

POSITION	ACTION
1-2	NORMAL OPERATE
2-3	SERVICE MODE (permanent on)

VARIANTENERKLÄRUNG/VERSION

VAR02 = GRUNDAUSFÜHRUNG/BASIC MODEL

VAR03 = FSA/FSB AUSFÜHRUNG/FSA/FSB

Zeichn.-Nr. 808 4819 S

+28V -SUPPLY

+20V -SUPPLY

SWITCHED NOISE SOURCE DC (28V)

SUPPLY CHECK

* nicht bestückt

X212

PIN-Nr.	
1	GNDD
2	PWRDWN
3	FANCON
4	TEMPC
5	
6	GNDA
7	NSCLK
8	NSON
9	
10	+20V
11	GNDA
12	+28V
13	
14	LEA21
15	TREFA
16	TREFD
17	
18	PWN ON
19	RFSTBY
20	SWNSDC

X211

PIN-Nr.	
1	+5V
2	+5V*
3	
4	S+5V
5	SGNDD
6	SPARE
7	GNDA
8	SPARE
9	GNDD

ROHDE&SCHWARZ	G	37063	06.88	PA	D		06.86	Pf	1KGF	Tag	Name
					E		10.86	Pf	Bearb	28.2 85	PF
					F		01.87	Pf	Gepr		
							Datum	Name	Norm		

Benennung: POWER-SUPPLY RF-A21

zu Gerat: FSA

Zeichn.-Nr: 808. 4819 S

reg.: V 806. 4011 V | erste Z: 806. 4011

Blatt-N: 1 | v 1 E

Ansicht und Leitungsführung Bauteilseite
View of tracks on component side

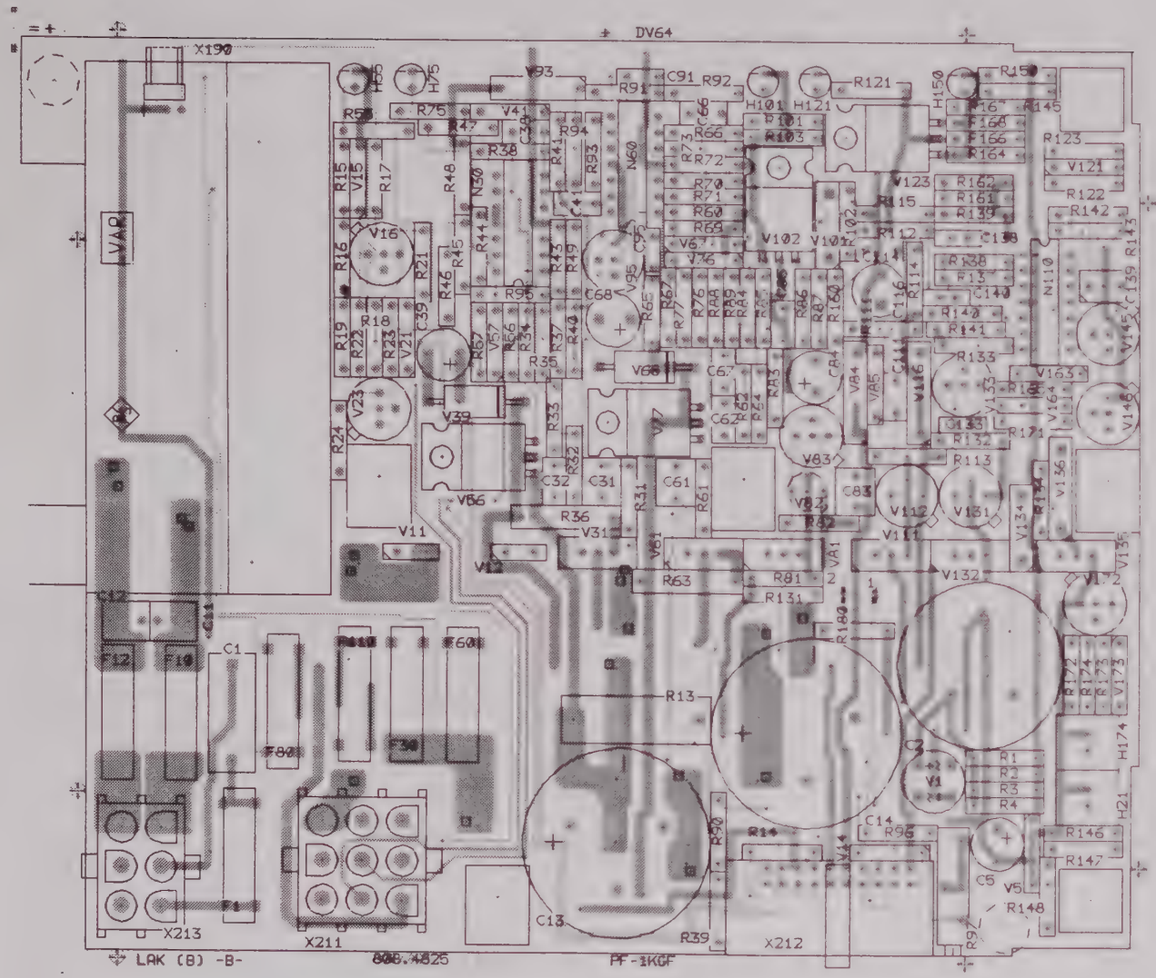

Ansicht und Leitungsführung Lötseite
View of tracks on solder side

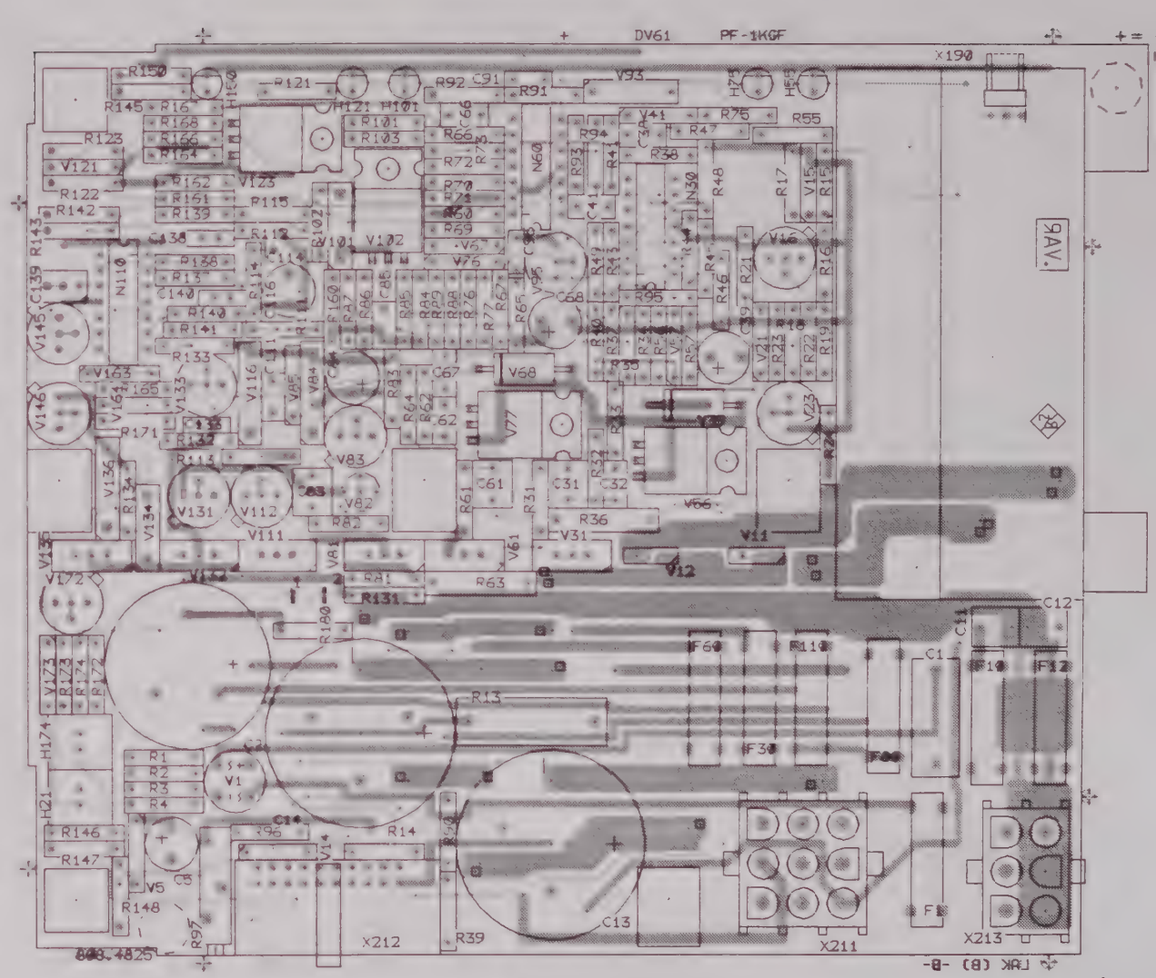

VARIANTENERKLÄRUNG/VERSION
VAR02 = GRUNDAUSFÜHRUNG/BASIC MODEL
VAR03 = FSA/FSB AUSFÜHRUNG/ FSA/FSB MODEL

ACHTUNG EGB!
Elektrostatisch gefährdete Bauelemente erfordern eine besondere Handhabung
ATTENTION ESD!
Electrostatic sensitive devices require a special handling
(hierzu HVC 250)

B		11.86	PF	Maße ohne Toleranzangabe		Maßstab 1 : 1	
L	37063	06.88	PA			Halbzeug, Werkstoff	
				1KGF	Tag	Name	Benennung: POWER SUPPLY RF - A21 — Z
				Bearb	11.86	PF	
				Gepr			
				Norm			
And. Zust.	Änderungs-Mitteilung	Tag	Name	ROHDE&SCHWARZ		Zeichn.-Nr 808.4819.01 ED	Blatt-Nr 2
				zu Gerat FSA		reg. V 806.4011 V erste Z	v Bl

Für diese Unterlage behalten wir uns alle Rechte vor.

Fur diese Unterlage behalten wir alle Rechte vor

F1 : Für/for 220/240V T2,5A
Für/for 100/120V T4,0A

47....440Hz

NETZ POWER

X1 I

P1

sw

2a

S1

2

br

1a

1

N

gnge

gnge

gnge

X1 II

240V

F1 220V

120V

100V

P

ws

sw

rt

vi

br

R1

R2

T1

or

or

gr

gr

ge

ge

gn

gn

bl

bl

br

X213

(X213)

21.1 or 1

21.2 or 2

21.3 gr 3

21.4 gr 4

21.5 ge 5

ge 6

21.6

A21

POWER-SUPPLY RF-A21

(s. 808. 4819. 02 S)

(X211)

+5V 1

+5V* 2

3

S +5V 4

S GND D 5

6

GND A 7

8

GND D 9

zum/to MOTHERBOARD

(X212) 1 ... 26

LÜFTER/ FAN

M E1

rt bl

4 2

(X170)

(+) (-)

X223

(X223)

22.1 gr 1

22.2 gr 2

22.3 bl 3

22.4 bl 4

(X221)

GND A 1

S +15V 4

SGND A 5

S -15V 6

+15V 7

-15V 9

zum/to MOTHERBOARD

(X222) 1 ... 20

A22

POWER-SUPPLY RF-A22

(s. 808. 4519. 02 S)

VARIANTENERKLÄRUNG/VERSION

VAR02 = GRUNDAUSFÜHRUNG/BASIC MODEL

VAR03 = FSA/FSB AUSFÜHRUNG/FSA/FSB MODEL

ROHDE&SCHWARZ	D	37063	06.88	PA	A		03.86	PF	1KGF	Tag	Name	Benennung: RF-POWER-SUPPLY
					B		04.86	PF	Bearb.	03.86	Pf	
					C	32 745 (112)	06.87	Bg	Gepr			
	And Zust	Änderungs-Mitteilung	Datum	Name	And Zust	Änderungs-Mitteilung	Datum	Name	Norm			zu Gerat FSA RF-TEIL

Zeichn-Nr 808. 4019 S

reg i V 808. 4011 V | erste Z. 808. 4011

Blatt-Nr 1 v 1 Bl

ROHDE&SCHWARZ

SERVICE DOCUMENTATION

Power Supply A22 (RF Unit)

808.4519.02

Contents

		Page
6	**Service Instructions Power Supply A22**	6.1
6.1	**Function Description**	6.1
6.1.1	Generation of Unregulated DC Voltages	6.2
6.1.2	Reference Voltage	6.3
6.1.3	Voltage Regulator	6.3
6.1.4	Blower Control	6.3
6.2	**Testing and Adjustment**	6.5
6.3	**Troubleshooting**	6.6

Parts lists
Circuit diagrams
Component location plans

6 Service Instructions Power Supply A22 (RF Unit)

(See circuit diagrams 808.4519 S and 808.4019 S)

6.1 Function Description

This module contains the rectifier with the unregulated voltages of ± 19 V from which 3 voltages (+ 15 V, -15 V, + 12 V) are generated as well as its own reference voltage, voltage monitoring and blower control with temperature monitoring for the RF unit.

The transformer voltages are applied to the module via X223 The module is to a limited extent a stand-alone unit.

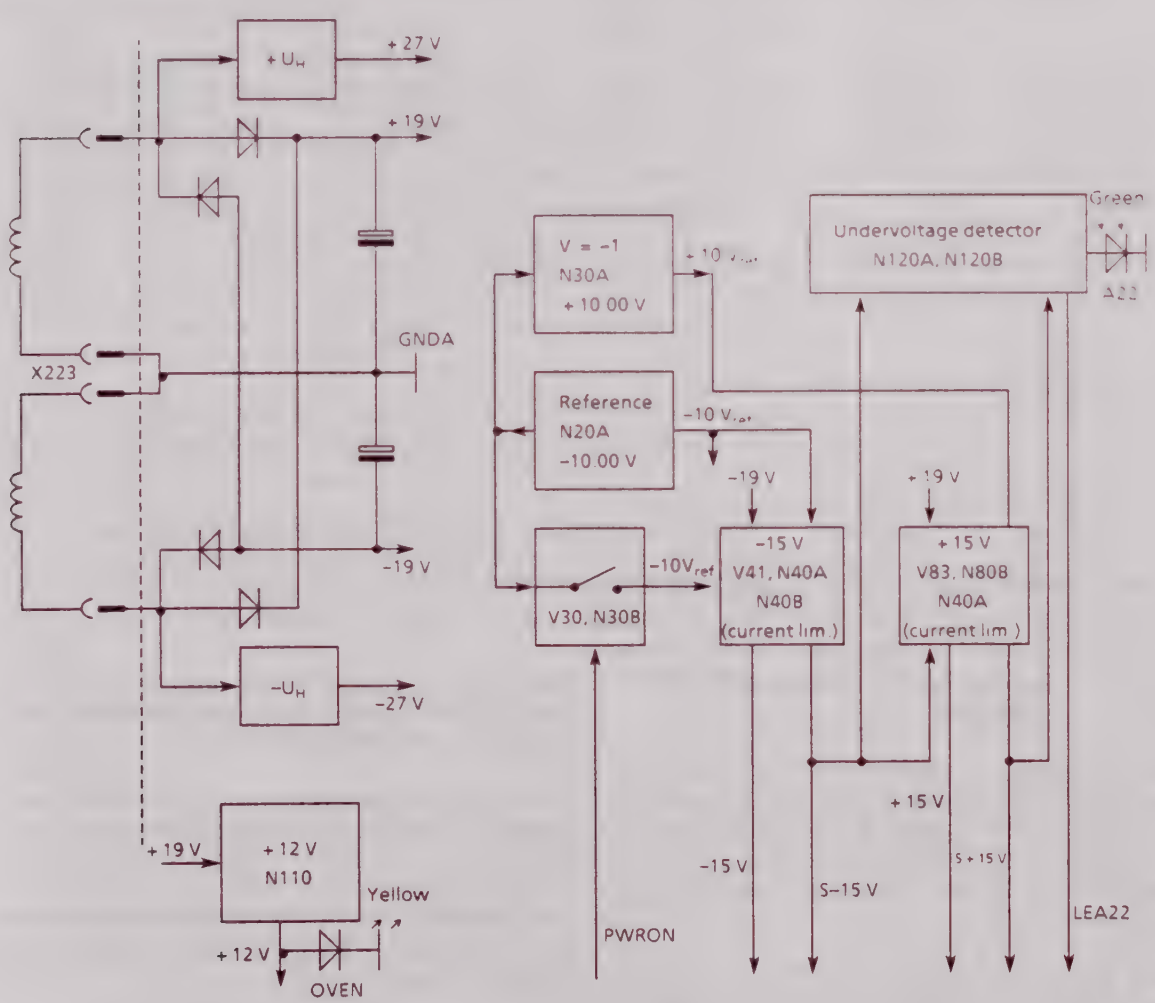

Fig. 6-1 Block diagram of the power supply module A22 (part 1)

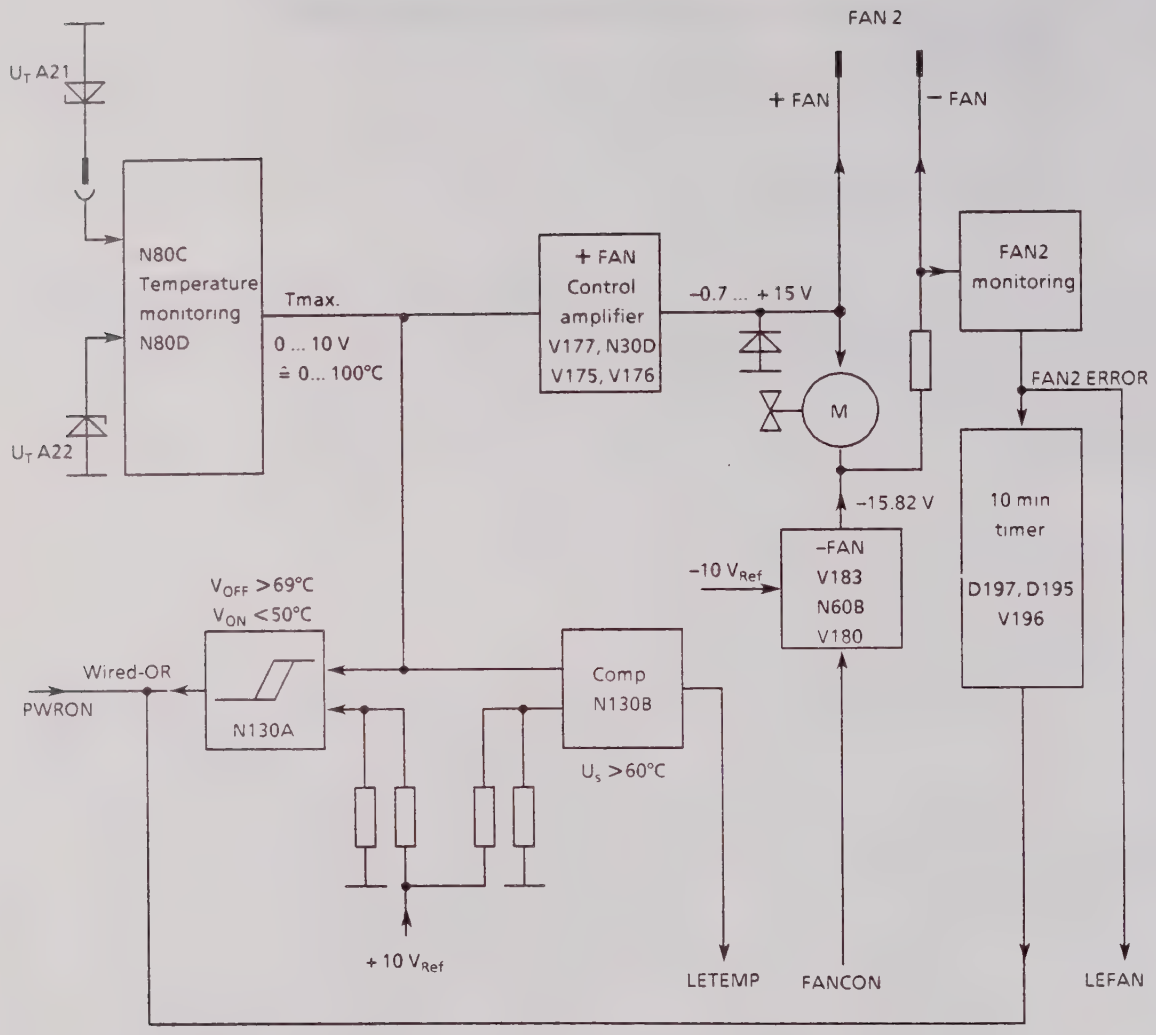

Fig. 6-1 Block diagram of the power supply module A22 (part 2)

6.1.1 Generation of Unregulated DC Voltages

An AC voltage of approx. 17.6 V is applied to diodes V1 to V4 via X23. C1 and C2 suppress high-frequency rectifier noise. A positive DC voltage of approx. 19.5 V is then present at the charging capacitors C3, C4 and a negative voltage of equal magnitude at C5.

The voltage doubling circuit (V6, V7, C6, C7) generates a positive auxiliary voltage whose internal impedance (R6, R7) makes it short-circuit-proof. V8 limits the voltage to 27 V.

The same type of circuit (V9, V10) is present to generate a negative auxiliary voltage.

The diodes V12 and V13 are used for test purposes if a DC voltage is applied instead of the voltages from transformer T1.

Several ground designations are necessary because the power supply is fitted with some sense lines:

The complete chassis with the ground surface of the instrument motherboard is designated "Ground analog" (GNDA)

The + 15-V voltage is fitted with sense lines. Although these connections are made during operation via the lines of the motherboard (series resistor of several mΩ), a resistor R3 is provided on the power supply board A22 in order to guarantee defined operation and adjustment of the module without the motherboard.

6.1.2 Reference Voltage

The reference voltage of this module is adjusted using R23. Since all voltages are derived from this (defined by resistance dividers), the reference voltage is first adjusted to a nominal value of –10 V and a fine adjustment then carried out to + 15.00 V.

If the PWRON signal is applied via X222/20, V30 is switched off via N30B and -10 V is present at C36.

The generated reference voltage refers to SGNDA.

6.1.3 Voltage Regulator

The voltage regulator -15 V obtains its reference voltage of -10 V via R36. The Darlington transistor V41 is driven via R40. The voltage divider R52, R53, R54 divides the output voltage by a factor of 1.5 and closes the control loop at N40/2 C40, C41, R41 are used for phase compensation. R42, R43 are current sense resistors; the circuitry of R40B implements the foldback current limitation where N40B/7 with a voltage of approx. –10.65 V takes over control of the loop as a current limiter.

R50, R51 are shorted during operation by a line on the motherboard and prevent open sense lines in test mode.

The LED H60 powered via R60,V60 is a protection diode against reversed polarity. If the output voltage reaches a too high value because of a fault, thyristor V62 is fired via V61, R62 and fuse F1 blown.

The voltage regulator + 15 V has the same circuitry as the -15 V section, but the voltage is derived from the -15 V.

The voltage regulator + 12 V is a fixed-voltage regulator with internal thermal current limitation and cannot be switched off. This voltage also supplies the temperature-controlled reference oscillator in standby mode.

6.1.4 Blower Control

The blower control monitors the temperature of the heat sinks in the power pack and switches the voltages off if the blower fails or if overheating is imminent.

The blowers operate at the lowest possible speed to reduce the noise. The speed is increased at higher ambient temperatures by means of a control circuit such that the heat sinks, and thus the inside of the instrument, remain at the same temperature

The temperature sensor V160 is connected to N80D such that a voltage of 100 mV/K is available at cathode V156. The absolute temperature is related to the voltage as follows:
0 to 10 V = 0 to 100°C.

A second temperature sensor is connected to N80C in the same manner at X222/4. The diodes V155, V156 represent an analog OR gate so that the control is taken over by whichever temperature is higher

The minimum blower speed is generated by a negative voltage of -15.8 V by means of V183 and N60B

V180 is blocked if the FANCON signal is applied and thus switches on the voltage. The current through the blower flows via V178.

A positive voltage is added to the negative blower voltage if the temperature reaches the value programmed by R171, R172 (voltage divider comprises V177, V175; N30B and V176 are used for current limitation). The speed is then increased until the temperature of the heat sinks no longer rises.

The second blower connected to X222/17/18 draws a pulsed current. This is evaluated by R186, C187 and N130C such that C191 is discharged with each pulse. If the pulses are absent, the capacitor C191 is charged via R191 and the comparator N130D outputs the error message LEFAN at X222/9.

Since D195/12 (reset) becomes Low with the error message, this can add the counted pulses from D197 until Q14 becomes High from D195 after approx. 10 minutes and the supply voltages switched off by V196.

This measure prevents damage to the instrument should the second blower not work. The blocking can only be cancelled by switching off the AC supply.

Undervoltages are monitored by N120A. H125 lights up if all voltages are present. The error message LEA22 (Low Error A22) is also output with N120B via X222/7 in the event of a fault.

6.2 Testing and Adjustment

As already mentioned in the function description, all voltages are derived from the -10-V reference voltage and depend on its adjustment.

The + 15-V supply is factory-set to ± 0.1 % using the reference voltage. An aging error of ± 1 % is permissible for the + 15 V.

Caution: Adjustment of R23 changes all voltages by the same percentage.

The output voltages should have the following tolerances after adjustment:

+ 15 V ± 1 % (measured at sense point)
−15 V ± 2 % (measured at sense point)
+ 12 V ± 4 %
FAN = −15.6 V ± 5 %.

Note: If a voltage exceeds the tolerance limits when the + 15 V is adjusted, an adjustment is also permissible whilst all other voltages are within their tolerances.

6.3 Troubleshooting

The instrument does not respond on power-up.

- Check AC supply and fuse.
- Check that the power-on command (PWRON = High at X222/20) reaches the module.
- The voltages at the charging capacitors C3, C5, the auxiliary voltages at C7, C10 and the reference voltage at X222/19 (+ 10 V) must be checked.

Only the red LED lights and possibly the blowers are working.

- The 2nd blower in the instrument is not plugged in or is faulty. X222/9 (LEFAN) must be Low in this case. The long-term timer switches the PWRON signal to ground via V196 after approx. 10 minutes.
- An overtemperature fault is present. The blowers rotate at a medium speed in this case, the output voltages are switched off. X222/8 (LETEMP) must be Low. The instrument switches itself on again when cooled down.

X222/8 (LETEMP) is Low but no blower rotates.

- X222/3 (FANCON) must be High.
- -15.6 V must be present at X222/17 and the voltage at X222/18 must be between -0.7 V and approx. + 20 V (depends on speed).

The line to the 2nd temperature sensor for module A22 is interrupted.

- In this case, the voltage at X222/4 (TEMPC) is >5 V.

The instrument can be switched on, but the green LED does not light up.

- Check missing voltages using the yellow LEDs. If all LEDs light up, check the tolerances of the voltages using a voltmeter.

Possible causes for a missing voltage:

- Current drain in instrument is too high, or a module is faulty. In this case, disconnect the modules in succession from the power supply by pulling out and then switch the instrument on again. The faulty module can then be determined.
- The overvoltage protection has been triggered. A short-circuit may be present on a module, or the series regulator or control is faulty.

  The voltage usually then enters the current limitation unless the series transistor is faulty and the fuse is thus blown.
- A short-circuit is present in the instrument with a voltage of opposite polarity. The current then flows via the polarity protection diode.

Refer to the circuit description if components are suspect within the module.

ROHDE&SCHWARZ

Schaltteillisten
Stromläufe
Bestückungspläne

Part lists
Circuit diagrams
Components plans

Listes des pièces détachées
Schémas de Circuit
Plans des composants

(R 29500 Bl 2)
095.1000 Bl. 2

Kennz. Comp.No.	Benennung Designation	Sachnummer Stock No.	Hersteller Manufacturer	Bezeichnung Designation	enthalten in contained in
.	ZUGEH.STROML./CIRC.DIAGR. 808.4519 S				
C1	CK 47ONF+-5%63V5RM MKT CAPACITOR	CK 099.2975	WIMA	MKS2/63/0,47UF/5%	
C2	CK 47ONF+-5%63V5RM MKT CAPACITOR	CK 099.2975	WIMA	MKS2/63/0,47UF/5%	
C3	CE 10MF+-20%40V RD35XH45 ELECTROLYTIC CAPACITOR	808.4548	VALVO	2222-051-57103	
C4	CE 10MF+-20%40V RD35XH45 ELECTROLYTIC CAPACITOR	808.4548	VALVO	2222-051-57103	
C5	CE 4,7MF+-20%40V RD25X45 ELECTROLYTIC CAPACITOR	808.4554	VALVO	2222-051-57472	
C6	CE 22UF-10+50% 63V 9X13 ELECTROLYTIC CAPACITOR	CE 006.7120	ROEDERST	EK 00 CB 222 J	
C7	CE 22UF-10+50% 63V 9X13 ELECTROLYTIC CAPACITOR	CE 006.7120	ROEDERST	EK 00 CB 222 J	
C9	CE 22UF-10+50% 63V 9X13 ELECTROLYTIC CAPACITOR	CE 006.7120	ROEDERST	EK 00 CB 222 J	
C10	CE 100UF-10+50% 40V 13X17 ELECTROLYTIC CAPACITOR	CE 022.7595	SIEMENS	B41316-B7107-Z	
C21	CK 100NF+-5%63V5RM MKT CAPACITOR	CK 099.2930	WIMA	MKS/2/63/0.1UF/5%	
C36	CK 1UF+-10%50V5RM MKT CAPACITOR	CK 099.2998	WIMA	MKS2/50/1UF/10%	
C40	CK 1.ONF +-1% 100V RM5 KP POLYPROPYLENE CAPACITOR	CK 007.7598	ROE	KP1830-210/011-R	
C41	CK 1UF+-10%50V5RM MKT CAPACITOR	CK 099.2998	WIMA	MKS2/50/1UF/10%	
C48	CC 100NF+-10%50V5K1200VIE CAPACITOR	CC 084.5350	UNION CARB	CK05BX104K	
C50	CE 47UF-10+50% 40V 9X13 ELECTROLYTIC CAPACITOR	CE 006.7142	ROEDERST	EK 00 CB 247 G	
C53	CK 10NF+-5%63V5RM MKT CAPACITOR	CK 099.2869	WIMA	FKS 2/100/0,01UF/5%	
C81	CK 1UF+-10%50V5RM MKT CAPACITOR	CK 099.2998	WIMA	MKS2/50/1UF/10%	
C82	CK 100NF+-5%63V5RM MKT CAPACITOR	CK 099.2930	WIMA	MKS/2/63/0.1UF/5%	
C83	CK 1UF+-10%50V5RM MKT CAPACITOR	CK 099.2998	WIMA	MKS2/50/1UF/10%	
C90	CE 47UF-10+50% 40V 9X13 ELECTROLYTIC CAPACITOR	CE 006.7142	ROEDERST	EK 00 CB 247 G	
C93	CK 100NF+-5%63V5RM MKT CAPACITOR	CK 099.2930	WIMA	MKS/2/63/0,1UF/5%	
C95	CK 10NF+-5%63V5RM MKT CAPACITOR	CK 099.2869	WIMA	FKS 2/100/0,01UF/5%	
C108	CC 100NF+-10%50V5K1200VIE CAPACITOR	CC 084.5350	UNION CARB	CK05BX104K	
C110	CK 100NF+-5%63V5RM MKT CAPACITOR	CK 099.2930	WIMA	MKS/2/63/0,1UF/5%	
C113	CK 100NF+-5%63V5RM MKT CAPACITOR	CK 099.2930	WIMA	MKS/2/63/0,1UF/5%	
C131	CC 100NF+-10%50V5K1200VIE CAPACITOR	CC 084.5350	UNION CARB	CK05BX104K	
C137	CC 15PF+-2%3X4NP0 CAPACITOR	CC 087.6441	VALVO	2222 678 10159	
C174	CC 47PF+-2%4X5N150 CAPACITOR	CC 087.6670	VALVO	2222 678 34479	
C177	CK 100NF+-5%63V5RM MKT CAPACITOR	CK 099.2930	WIMA	MKS/2/63/0,1UF/5%	
C183	CC 100NF+-10%50V5K1200VIE CAPACITOR	CC 084.5350	UNION CARB	CK05BX104K	
C187	CK 100NF+-5%63V5RM MKT CAPACITOR	CK 099.2930	WIMA	MKS/2/63/0,1UF/5%	
C188	CC 10NF-20+50%7X8R4000 CAPACITOR	CC 087.7525	VALVO	2222 63051 64051103	
C191	CK 1UF+-10%50V5RM MKT CAPACITOR	CK 099.2998	WIMA	MKS2/50/1UF/10%	
C196	CC 100NF+-10%50V5K1200VIE CAPACITOR	CC 084.5350	UNION CARB	CK05BX104K	
C197	CK 10NF+-5%63V5RM MKT CAPACITOR	CK 099.2869	WIMA	FKS 2/100/0,01UF/5%	
C198	CK 33ONF+-5%63V5RM MKT CAPACITOR	CK 099.2969	WIMA	MKS2/63/0,33UF/5%	
D195	BL MM74HC4060N 14ST.B.CTR 14 STAGE BINARY COUNTER	BL 394.9122	NSC	MM74HC4060N	

Kennz. Comp.No.	Benennung Designation	Sachnummer Stock No.	Hersteller Manufacturer	Bezeichnung Designation	enthalten in contained in
D197	BO SE555JG TIMER TIMER	262.3886	RAYTHEON	RM555DE	
F1	SS SCHMELZS.F4 DIN41660 FUSE NUR VAR/ONLY MOD: 02	SS 020.7581	WICKMANN	F 4 DIN 41660	
F1	SS SCHMELZS.F6,3DIN41660 FUSE NUR VAR/ONLY MOD: 03	SS 075.0914	WICKMANN	F 6,3 DIN 41660	
F2	SS SCHMELZS.F2 DIN41660 FUSE F2E DIN 41571	SS 087.4884	WICKMANN	F 2 DIN 41660	
H60	AF HLMP1401 LED GE RD3 LED	AF 235.4604	GEN.INSTR.	HLMP1401-20/21	
H100	AF HLMP1401 LED GE RD3 LED	AF 235.4604	GEN.INSTR.	HLMP1401-20/21	
H110	AF HLMP3401 LED GE RD5 LED	092.8703	HEWLETT	HLMP3401	
H125	AF HLMP3502 LED GN RD5 LED	235.4862	HEWLETT	HLMP3502	
N20	BO UA741MJG OPAMP OPERATIONAL AMPLIFIER	BO 275.0822	TEXAS	UA741MJG	
N30	BO LM124J 4XL.P.OPAMP OPERATIONAL AMPLIFIER	300.6353	NSC	LM124J	
N40	BO LF412CN 2XFET OPAMP OPERATIONAL AMPLIFIER	356.0521	NSC	LF412CN	
N60	BO LF412CN 2XFET OPAMP OPERATIONAL AMPLIFIER	356.0521	NSC	LF412CN	
N80	BO LM124J 4XL.P.OPAMP OPERATIONAL AMPLIFIER	300.6353	NSC	LM124J	
N110	BO LM7812CT+12V1AO VREGL VOLTAGE REGULATOR	BO 344.9641	NSC	LM7812CT	
N120	BO TAE2453A 2XOC. OPAMP OPERATIONAL AMPLIFIER	354.9850	SIEMENS	TAE2453A	
N130	BO LM339AN 4X COMPAR COMPARATOR	291.5148	NSC	LM339AN	
P1	FP INDIREKT.STECKERL.36P. PIN CONNECTOR	FP 242.3600	BINDER	742-5-11-0178-00-36	
P2	FP INDIREKT.STECKERL.36P. PIN CONNECTOR	FP 242.3600	BINDER	742-5-11-0178-00-36	
P3	FP INDIREKT.STECKERL.36P. PIN CONNECTOR	FP 242.3600	BINDER	742-5-11-0178-00-36	
P4	FP INDIREKT.STECKERL.36P. PIN CONNECTOR 4X1-POLIG/1PIN	FP 242.3600	BINDER	742-5-11-0178-00-36	
R3	RD 2.4W 1 OHM +-3% WIRE WOUND RESISTOR	RD 069.1441	SAGE	S1200/10HM/3%TK20	
R6	RL 0,35W 681 OHM+-1%TK50 RESISTOR	RL 083.0490	DRALORIC	SMA0207/6810HM-F-D	
R7	RL 0,35W 681 OHM+-1%TK50 RESISTOR	RL 083.0490	DRALORIC	SMA0207/6810HM-F-D	
R9	RL 0,35W 681 OHM+-1%TK50 RESISTOR	RL 083.0490	DRALORIC	SMA0207/6810HM-F-D	
R10	RL 0,35W 681 OHM+-1%TK50 RESISTOR	RL 083.0490	DRALORIC	SMA0207/6810HM-F-D	
R11	RL 0,35W 681 OHM+-1%TK50 RESISTOR	RL 083.0490	DRALORIC	SMA0207/6810HM-F-D	
R20	RL 0,35W 1,21KOHM+-1%TK50 RESISTOR	RL 083.0655	DRALORIC	SMA0207/1,21K-F-D	
R21	RL 0,35W 6,81KOHM+-1%TK50 RESISTOR	RL 082.2560	DRALORIC	SMA 0207/6,81K-F-C	
R22	RL 0,35W 8,25KOHM+-1%TK50 RESISTOR	RL 083.1239	DRALORIC	SMA0207/8,25K-F-D	
R23	RS 0,75W 5KOHM+-10%CERMET DEPOS.-CARBON POTENTIOMET	RS 037.7380	BOURNS	3006P-1-5 KOHM+-10%	
R24	RL 0,35W 562 OHM+-1%TK50 RESISTOR	RL 083.0461	DRALORIC	SMA0207/5620HM-F-D	
R25	RL 0,35W 10,0KOHM+-1%TK50 RESISTOR	RL 083.1297	DRALORIC	SMA0207/10K-F-D	
R30	RL 0,35W 33,2KOHM+-1%TK50 RESISTOR	RL 083.1674	DRALORIC	SMA0207/33,2K-F-C	
R31	RL 0,35W 22,1KOHM+-1%TK50 RESISTOR	RL 083.1545	DRALORIC	SMA/207/22,1K-F-C	
R32	RL 0,35W 27,4KOHM+-1%TK50 RESISTOR	RL 082.2583	DRALORIC	SMA 0207/27,4K-F-C	

Kennz. Comp.No.	Benennung Designation	Sachnummer Stock No.	Hersteller Manufacturer	Bezeichnung Designation	enthalten in contained in
R33	RL 0,35W 1,50KOHM+-1%TK50 RESISTOR	RL 083.0732	DRALORIC	SMA0207/1,50K-F-D	
R34	RL 0,35W 100KOHM+-1%TK50 RESISTOR	RL 082.1764	DRALORIC	SMA0207/100K-F-C	
R35	RL 0,35W 10,0KOHM+-1%TK50 RESISTOR	RL 083.1297	DRALORIC	SMA0207/10K-F-D	
R36	RL 0,35W 4,75KOHM+-1%TK50 RESISTOR	RL 083.1097	DRALORIC	SMA0207/4,75K-F-D	
R37	RL 0,35W 100KOHM+-1%TK50 RESISTOR	RL 082.1764	DRALORIC	SMA0207/100K-F-C	
R38	RL 0,35W 47,5KOHM+-1%TK50 RESISTOR	RL 083.1800	DRALORIC	SMA/207/47,5K-F-C	
R39	RL 0,35W 100KOHM+-1%TK50 RESISTOR	RL 082.1764	DRALORIC	SMA0207/100K-F-C	
R40	RL 0,35W 475 OHM+-1%TK50 RESISTOR	RL 083.0390	DRALORIC	SMA0207/475OHM-F-D	
R41	RL 0,35W 10,0 OHM+-1%TK50 RESISTOR	RL 082.8852	DRALORIC	SMA0207/100HM-F-D	
R42	RD 0,8W 0,15 OHM+-3% WIRE-WOUND RESISTOR	RD 087.5222	SAGE	1000S0,150HM+3%	
R43	RL 0,35W 221 KOHM+-1%TK50 RESISTOR	RL 083.2270	DRALORIC	SMA0207/221K-F-C	
R44	RL 0,35W 1KOHM+-1%TK50 RESISTOR NUR VAR/ONLY MOD: 02	RL 082.2160	DRALORIC	SMA0207/1K-F-C	
R44	RL 0,35W 1,21KOHM+-1%TK50 RESISTOR NUR VAR/ONLY MOD: 03	RL 083.0655	DRALORIC	SMA0207/1,21K-F-D	
R45	RL 0,35W 100KOHM+-1%TK50 RESISTOR	RL 082.1764	DRALORIC	SMA0207/100K-F-C	
R47	RL 0,35W 1KOHM+-1%TK50 RESISTOR NUR VAR/ONLY MOD: 02	RL 082.2160	DRALORIC	SMA0207/1K-F-C	
R47	RL 0,35W 1,21KOHM+-1%TK50 RESISTOR NUR VAR/ONLY MOD: 03	RL 083.0655	DRALORIC	SMA0207/1,21K-F-D	
R48	RL 0,35W 100KOHM+-1%TK50 RESISTOR	RL 082.1764	DRALORIC	SMA0207/100K-F-C	
R50	RL 0,35W 825 OHM+-1%TK50 RESISTOR	RL 082.2502	DRALORIC	SMA 0207/8250HM-F-C	
R51	RL 0,35W 825 OHM+-1%TK50 RESISTOR	RL 082.2502	DRALORIC	SMA 0207/8250HM-F-C	
R52	RL 0,35W 10,0KOHM+-1%TK50 RESISTOR	RL 083.1297	DRALORIC	SMA0207/10K-F-D	
R53	RL 0,35W 10,0KOHM+-1%TK50 RESISTOR	RL 083.1297	DRALORIC	SMA0207/10K-F-D	
R54	RL 0,35W 10,0KOHM+-1%TK50 RESISTOR	RL 083.1297	DRALORIC	SMA0207/10K-F-D	
R60	RL 0,35W 1,21KOHM+-1%TK50 RESISTOR	RL 083.0655	DRALORIC	SMA0207/1,21K-F-D	
R61	RL 0,35W 392 OHM+-1%TK50 RESISTOR	RL 082.2183	DRALORIC	SMA0207/392K-F-C	
R62	RL 0,35W 10,0 OHM+-1%TK50 RESISTOR	RL 082.8852	DRALORIC	SMA0207/100HM-F-D	
R80	RL 0,35W 15,0KOHM+-1%TK50 RESISTOR	RL 083.1400	DRALORIC	SMA0207/15K-F-D	
R81	RL 0,35W 3,32KOHM+-1%TK50 RESISTOR	RL 083.0990	DRALORIC	SMA0207/3,32K-F-D	
R82	RL 0,35W 475 OHM+-1%TK50 RESISTOR	RL 083.0390	DRALORIC	SMA0207/475OHM-F-D	
R83	RL 0,35W 10,0 OHM+-1%TK50 RESISTOR	RL 082.8852	DRALORIC	SMA0207/100HM-F-D	
R85	RD 0,8W 47 MIOHM+-3% WIRE-WOUND RESISTOR	RD 069.1458	SAGE	1000S/0,040HM/3%	
R86	RD 0,8W 47 MIOHM+-3% WIRE-WOUND RESISTOR	RD 069.1458	SAGE	1000S/0,040HM/3%	
R87	RL 0,35W 4,75KOHM+-1%TK50 RESISTOR NUR VAR/ONLY MOD: 03	RL 083.1097	DRALORIC	SMA0207/4,75K-F-D	
R87	RL 0,35W 2,21KOHM+-1%TK50 RESISTOR NUR VAR/ONLY MOD: 02	RL 082.2477	DRALORIC	SMA 0207/2,21K-F-C	
R88	RL 0,35W 1,21KOHM+-1%TK50 RESISTOR	RL 083.0655	DRALORIC	SMA0207/1,21K-F-D	
R89	RL 0,35W 1KOHM+-1%TK50 RESISTOR NUR VAR/ONLY MOD: 02	RL 082.2160	DRALORIC	SMA0207/1K-F-C	

Alle Rechte vor

Kennz. Comp.No.	Benennung Designation	Sachnummer Stock No.	Hersteller Manufacturer	Bezeichnung Designation	enthalten in contained in
R89	RL 0,35W 1,50KOHM+-1%TK50 RESISTOR NUR VAR/ONLY MOD: 03	RL 083.0732	DRALORIC	SMA0207/1,50K-F-D	
R90	RL 0,35W 100KOHM+-1%TK50 RESISTOR	RL 082.1764	DRALORIC	SMA0207/100K-F-C	
R91	RL 0,35W 100KOHM+-1%TK50 RESISTOR	RL 082.1764	DRALORIC	SMA0207/100K-F-C	
R92	RL 0,35W 56,2KOHM+-1%TK50 RESISTOR NUR VAR/ONLY MOD: 02	RL 082.2231	DRALORIC	SMA0207/56,2K-F-C	
R92	RL 0,35W 47,5KOHM+-1%TK50 RESISTOR NUR VAR/ONLY MOD: 03	RL 083.1800	DRALORIC	SMA/207/47,5K-F-C	
R93	RL 0,35W 825 KOHM+-1%TK50 RESISTOR NUR VAR/ONLY MOD: 02	RL 083.2812	DRALORIC	SMA0207/825K-F-C	
R93	RL 0,35W 825 KOHM+-1%TK50 RESISTOR NUR VAR/ONLY MOD: 03	RL 083.2812	DRALORIC	SMA0207/825K-F-C	
R94	RL 0,35W 150 KOHM+-1%TK50 RESISTOR	RL 083.2129	DRALORIC	SMA/207/150K-F-C	
R95	RL 0,35W 10,0KOHM+-1%TK50 RESISTOR	RL 083.1297	DRALORIC	SMA0207/10K-F-D	
R96	RL 0,35W 10,0KOHM+-1%TK50 RESISTOR	RL 083.1297	DRALORIC	SMA0207/10K-F-D	
R97	RL 0,35W 10,0KOHM+-1%TK50 RESISTOR	RL 083.1297	DRALORIC	SMA0207/10K-F-D	
R98	RL 0,35W 825 OHM+-1%TK50 RESISTOR	RL 082.2502	DRALORIC	SMA 0207/825OHM-F-C	
R99	RL 0,35W 825 OHM+-1%TK50 RESISTOR	RL 082.2502	DRALORIC	SMA 0207/825OHM-F-C	
R100	RL 0,35W 1,21KOHM+-1%TK50 RESISTOR	RL 083.0655	DRALORIC	SMA0207/1,21K-F-D	
R101	RL 0,35W 392 OHM+-1%TK50 RESISTOR	RL 082.2183	DRALORIC	SMA0207/392K-F-C	
R102	RL 0,35W 10,0 OHM+-1%TK50 RESISTOR	RL 082.8852	DRALORIC	SMA0207/10OHM-F-D	
R108	RL 0,35W 100 OHM+-1%TK50 RESISTOR	RL 082.6543	DRALORIC	SMA0207/100/HM-F-D	
R109	RL 0,35W 47,5 OHM+-1%TK50 RESISTOR	RL 082.9507	DRALORIC	SMA0207/47,5OHM-F-D	
R110	RL 0,35W 1KOHM+-1%TK50 RESISTOR	RL 082.2160	DRALORIC	SMA0207/1K-F-C	
R120	RL 0,35W 121KOHM+-1%TK50 RESISTOR	RL 083.2070	DRALORIC	SMA/207/121K-F-C	
R121	RL 0,35W 33,2KOHM+-1%TK50 RESISTOR	RL 083.1674	DRALORIC	SMA0207/33,2K-F-C	
R123	RL 0,35W 100KOHM+-1%TK50 RESISTOR	RL 082.1764	DRALORIC	SMA0207/100K-F-C	
R124	RL 0,35W 39,2KOHM+-1%TK50 RESISTOR	RL 083.1745	DRALORIC	SMA/207/39,2K-F-C	
R125	RL 0,35W 1,82KOHM+-1%TK50 RESISTOR	RL 082.2277	DRALORIC	SMA0207/1,82K-F-C	
R127	RL 0,35W 10,0KOHM+-1%TK50 RESISTOR	RL 083.1297	DRALORIC	SMA0207/10K-F-D	
R130	RL 0,35W 56,2KOHM+-1%TK50 RESISTOR	RL 082.2231	DRALORIC	SMA0207/56,2K-F-C	
R131	RL 0,35W 681 KOHM+-1%TK50 RESISTOR	RL 083.2735	DRALORIC	SMA0207/381K-F-C	
R133	RL 0,35W 27,4KOHM+-1%TK50 RESISTOR	RL 082.2583	DRALORIC	SMA 0207/27,4K-F-C	
R134	RL 0,35W 18,2KOHM+-1%TK50 RESISTOR	RL 083.1480	DRALORIC	SMA/207/18,2K-F-C	
R136	RL 0,35W 56,2KOHM+-1%TK50 RESISTOR	RL 082.2231	DRALORIC	SMA0207/56,2K-F-C	
R137	RL 0,35W 2.74MOHM+-1%TK50 METALFILMRESISTOR	RL 099.8980	RESISTA	MK2 2.74MOHM+-1%TK50	
R138	RL 0,35W 18,2KOHM+-1%TK50 RESISTOR	RL 083.1480	DRALORIC	SMA/207/18,2K-F-C	
R139	RL 0,35W 12,1KOHM+-1%TK50 RESISTOR	RL 083.1351	DRALORIC	SMA0207/12,1K-F-D	
R140	RL 0,35W 10,0KOHM+-1%TK50 RESISTOR	RL 083.1297	DRALORIC	SMA0207/10K-F-D	
R150	RL 0,35W 10,0KOHM+-1%TK50 RESISTOR	RL 083.1297	DRALORIC	SMA0207/10K-F-D	
R151	RL 0,35W 22,1KOHM+-1%TK50 RESISTOR	RL 083.1545	DRALORIC	SMA/207/22,1K-F-C	

Kennz. Comp.No.	Benennung Designation	Sachnummer Stock No.	Hersteller Manufacturer	Bezeichnung Designation	enthalten in contained in
R152	RL 0,35W 221 KOHM+-1%TK50 RESISTOR	RL 083.2270	DRALORIC	SMA0207/221K-F-C	
R153	RL 0,35W 392 KOHM+-1%TK50 RESISTOR	RL 083.2512	DRALORIC	SMA0207/392K-F-C	
R154	RL 0,35W 33,2KOHM+-1%TK50 RESISTOR	RL 083.1674	DRALORIC	SMA0207/33,2K-F-C	
R155	RL 0,35W 221 KOHM+-1%TK50 RESISTOR	RL 083.2270	DRALORIC	SMA0207/221K-F-C	
R156	RL 0,35W 82,5KOHM+-1%TK50 RESISTOR	RL 082.2302	DRALORIC	SMA0207/82,5K-F-C	
R157	RL 0,35W4,75MOHM+-1%TK50 METALFILMRESISTOR	RL 099.8250	RESISTA	MK2 4,75MOHM 1% TK50	
R158	RL 0,35W 10,0KOHM+-1%TK50 RESISTOR	RL 083.1297	DRALORIC	SMA0207/10K-F-D	
R159	RL 0,35W 22,1KOHM+-1%TK50 RESISTOR	RL 083.1545	DRALORIC	SMA/207/22,1K-F-C	
R160	RL 0,35W 221 KOHM+-1%TK50 RESISTOR	RL 083.2270	DRALORIC	SMA0207/221K-F-C	
R161	RL 0,35W 10,0 OHM+-1%TK50 RESISTOR	RL 082.8852	DRALORIC	SMA0207/100HM-F-D	
R162	RL 0,35W 10,0KOHM+-1%TK50 RESISTOR	RL 083.1297	DRALORIC	SMA0207/10K-F-D	
R163	RL 0,35W 39,2KOHM+-1%TK50 RESISTOR	RL 083.1745	DRALORIC	SMA/207/39,2K-F-C	
R170	RL 0,35W 221 KOHM+-1%TK50 RESISTOR	RL 083.2270	DRALORIC	SMA0207/221K-F-C	
R171	RL 0,35W 100KOHM+-1%TK50 RESISTOR	RL 082.1764	DRALORIC	SMA0207/100K-F-C	
R172	RL 0,35W 182 KOHM+-1%TK50 RESISTOR	RL 083.2193	DRALORIC	SMA0207/182K-F-C	
R174	RL 0,35W4,75MOHM+-1%TK50 METALFILMRESISTOR	RL 099.8250	RESISTA	MK2 4,75MOHM 1% TK50	
R175	RL 0,35W 475 OHM+-1%TK50 RESISTOR	RL 083.0390	DRALORIC	SMA0207/4750HM-F-D	
R176	RL 0,35W 1,0 OHM+-1%TK50 METALFILMRESISTOR	RL 099.7860	RESISTA	MK2 1,00 OHM 1% TK50	
R179	RL 0,35W 1,0 OHM+-1%TK50 METALFILMRESISTOR	RL 099.7860	RESISTA	MK2 1,00 OHM 1% TK50	
R180	RL 0,35W 10,0KOHM+-1%TK50 RESISTOR	RL 083.1297	DRALORIC	SMA0207/10K-F-D	
R181	RL 0,35W 15,0KOHM+-1%TK50 RESISTOR	RL 083.1400	DRALORIC	SMA0207/15K-F-D	
R182	RL 0,35W 100KOHM+-1%TK50 RESISTOR	RL 082.1764	DRALORIC	SMA0207/100K-F-C	
R183	RL 0,35W 475 OHM+-1%TK50 RESISTOR	RL 083.0390	DRALORIC	SMA0207/4750HM-F-D	
R184	RL 0,35W 5,62KOHM+-1%TK50 RESISTOR	RL 082.2190	DRALORIC	SMA0207/5,62K-F-C	
R185	RL 0,35W 10,0KOHM+-1%TK50 RESISTOR	RL 083.1297	DRALORIC	SMA0207/10K-F-D	
R186	RL 0,35W3,32 OHM+-1%TK50 METALFILMRESISTOR	RL 099.7983	RESISTA	MK2 3,32 OHM 1% TK50	
R187	RL 0,35W 562 KOHM+-1%TK50 RESISTOR	RL 083.2664	DRALORIC	SMA0207/562K-F-C	
R188	RL 0,35W 33,2KOHM+-1%TK50 RESISTOR	RL 083.1674	DRALORIC	SMA0207/33,2K-F-C	
R189	RL 0,35W 33,2KOHM+-1%TK50 RESISTOR	RL 083.1674	DRALORIC	SMA0207/33,2K-F-C	
R190	RL 0,35W 1KOHM+-1%TK50 RESISTOR	RL 082.2160	DRALORIC	SMA0207/1K-F-C	
R191	RL 0,35W 1MOHM+-1%TK50 RESISTOR	RL 082.7862	DRALORIC	SMA0207/1M-F-D	
R195	RL 0,35W 10,0KOHM+-1%TK50 RESISTOR	RL 083.1297	DRALORIC	SMA0207/10K-F-D	
R196	RL 0,35W 10,0KOHM+-1%TK50 RESISTOR	RL 083.1297	DRALORIC	SMA0207/10K-F-D	
R197	RL 0,35W 100 OHM+-1%TK50 RESISTOR	RL 082.6543	DRALORIC	SMA0207/100/HM-F-D	
R198	RL 0,35W 100KOHM+-1%TK50 RESISTOR	RL 082.1764	DRALORIC	SMA0207/100K-F-C	
R199	RL 0,35W 100KOHM+-1%TK50 RESISTOR	RL 082.1764	DRALORIC	SMA0207/100K-F-C	
R200	RL 0,35W 1KOHM+-1%TK50 RESISTOR	RL 082.2160	DRALORIC	SMA0207/1K-F-C	
V1	AG BY229/600 GL 600V 7A0 RECTIFIER	AG 208.5226	VALVO	BY229/600	

Kennz. Comp.No.	Benennung Designation	Sachnummer Stock No.	Hersteller Manufacturer	Bezeichnung Designation	enthalten in contained in
V2	AG BY229/600 GL 600V 7AO RECTIFIER	AG 208.5226	VALVO	BY229/600	
V3	AG BY251 GL 200V 3AO RECTIFIER	AG 250.3128	INTERMETAL	BY251	
V4	AG BY251 GL 200V 3AO RECTIFIER	AG 250.3128	INTERMETAL	BY251	
V6	AG 1N4007 GL1000V 1AO RECTIFIER	AG 013.0310	AEG-TELEF	1N4007	
V7	AG 1N4007 GL1000V 1AO RECTIFIER	AG 013.0310	AEG-TELEF	1N4007	
V8	AE BZX55/B27 0,5W ZDI ZENER DIODE	AE 615.9085	VALVO	BZX55/B27	
V9	AG 1N4007 GL1000V 1AO RECTIFIER	AG 013.0310	AEG-TELEF	1N4007	
V10	AG 1N4007 GL1000V 1AO RECTIFIER	AG 013.0310	AEG-TELEF	1N4007	
V11	AE BZX55/B27 0,5W ZDI ZENER DIODE	AE 615.9085	VALVO	BZX55/B27	
V24	AE 1N827 6,2V REFDI REFERENCE DIODE	AE 418.0029	CDI	1N827	
V30	AK BCY79IX P 45V 200MA TRANSISTOR	AK 010.3777	VALVO	BCY79IX	
V31	AE 5082-2800 SCHOTTKY DIODE	AE 012.9066	HEWLETT-P.	5082-2800	
V41	AL BDX34B P 80V DARL TRANSISTOR	AL 092.9339	RCA	BDX34B	
V48	AD 1N4448 75V 0A15 UDI DIODE	AD 012.0700	TEXAS INST	1N4448 GEGURTET	
V60	AG BY251 GL 200V 3AO RECTIFIER	AG 250.3128	INTERMETAL	BY251	
V61	AE BZX55/B16 0,5W ZDI ZENER DIODE	AE 418.1390	VALVO	BZX55/B16	
V62	AG TIC126S THY700V12AO THYRISTOR	AG 553.0397	TEXAS INST	TIC126S	
V63	AE 5082-2800 SCHOTTKY DIODE NUR VAR/ONLY MOD: 03	AE 012.9066	HEWLETT-P.	5082-2800	
V64	AE 5082-2800 SCHOTTKY DIODE NUR VAR/ONLY MOD: 03	AE 012.9066	HEWLETT-P.	5082-2800	
V83	AL BDX67B N 100V DARL TRANSISTOR	AL 287.6320	VALVO	BDX67B	
V93	AD 1N4448 75V 0A15 UDI DIODE	AD 012.0700	TEXAS INST	1N4448 GEGURTET	
V100	AG BY251 GL 200V 3AO RECTIFIER	AG 250.3128	INTERMETAL	BY251	
V101	AE BZX55/B16 0,5W ZDI ZENER DIODE	AE 418.1390	VALVO	BZX55/B16	
V102	AG TIC126S THY700V12AO THYRISTOR	AG 553.0397	TEXAS INST	TIC126S	
V108	AG TIC126S THY700V12AO THYRISTOR	AG 553.0397	TEXAS INST	TIC126S	
V109	AE BZX79/C13 0,5W ZDI ZENER DIODE	AE 012.2549	VALVO	BZX79/C13	
V110	AG 1N4007 GL1000V 1AO RECTIFIER	AG 013.0310	AEG-TELEF	1N4007	
V155	AD 1N4448 75V 0A15 UDI DIODE	AD 012.0700	TEXAS INST	1N4448 GEGURTET	
V156	AD 1N4448 75V 0A15 UDI DIODE	AD 012.0700	TEXAS INST	1N4448 GEGURTET	
V160	BJ LM335H TEMP.SENSOR PRECION TEMP.SENSOR	395.2867	NSC	LM335H	
V175	AK BCY59IX N 45V 200MA TRANSISTOR	AK 010.5163	VALVO	BCY59IX	
V176	AK BCY79IX P 45V 200MA TRANSISTOR	AK 010.3777	VALVO	BCY79IX	
V177	AL BDX78 P 80V 8AO TRANSISTOR	AL 284.4562	VALVO	BDX78	
V178	AG 1N4007 GL1000V 1AO RECTIFIER	AG 013.0310	AEG-TELEF	1N4007	
V179	AK BCY79IX P 45V 200MA TRANSISTOR	AK 010.3777	VALVO	BCY79IX	
V180	AK BCY79IX P 45V 200MA TRANSISTOR	AK 010.3777	VALVO	BCY79IX	
V183	AL BDX78 P 80V 8AO TRANSISTOR	AL 284.4562	VALVO	BDX78	
V196	AK BCY59IX N 45V 200MA TRANSISTOR	AK 010.5163	VALVO	BCY59IX	

Kennz. Comp.No.	Benennung Designation	Sachnummer Stock No.	Hersteller Manufacturer	Bezeichnung Designation	enthalten in contained in
V198	AD 1N4448 75V 0A15 UDI DIODE	AD 012.0700	TEXAS INST	1N4448 GEGURTET	
V200	AE BZX79/C4V7 0,5W ZDI ZENER DIODE	AE 012.2432	AEG	BZX55/C4V7 GEG.	
X124	VL WIRE-WRAP PIN WIRE-WRAP PIN	VL 088.4507	BERG	NR. 75 403-001	
X170	FP INDIREKT.STECKERL.36P. PIN CONNECTOR 4-POLIG/4 PINS	FP 242.3600	BINDER	742-5-11-0178-00-36	
X196	VL WIRE-WRAP PIN WIRE-WRAP PIN	VL 088.4507	BERG	NR. 75 403-001	
X197	VL WIRE-WRAP PIN WIRE-WRAP PIN	VL 088.4507	BERG	NR. 75 403-001	
X221	FP EINLOETSTECKER 9POL CONNECTOR 9POL	681.1150	AMP	350712-1	
X222	FP LP-STECKER 2REIH.20W PCB CONNECTOR,20 CONTACT	805.8936			
X223	FP EINLOETBUCHSE 4POL CONNECTOR 4POL	808.4560	AMP	350826-1	
					- ENDE -

Kennz. Comp.No.	Benennung Designation	Sachnummer Stock No.	Hersteller Manufacturer	Bezeichnung Designation	enthalten in contained in
A21	ED POWER SUPPLY RF-A21 POWER SUPPLY NUR VAR/ONLY MOD: 02 HIERZU STROML.808.4819 S SEE CIRC DIAGR.808.4819 S	808.4819.02			
A21	ED POWER SUPPLY RF-A21 NUR VAR/ONLY MOD: 03 HIERZU STROML.808.4819 S SEE CIRC DIAGR.808.4819 S	808.4819.03			
A22	ED POWER SUPPLY RF-A22 POWER SUPPLY NUR VAR/ONLY MOD: 02 HIERZU STROML.808.4819 S SEE CIRC.DIAGR.808.4819 S	808.4519.02			
A22	ED POWER SUPPLY RF-A22 NUR VAR/ONLY MOD: 03 HIERZU STROML.8084819 S SEE CIRC.DIAGR.808.4819 S	806.4519.03			
E1	ZE LUEFTER FAN	808.4177			
F1	SS SCHMELZS.T2.5DDIN41571 FUSE FUER/FOR 220/240V FUER/FOR 100/120V SS020.7600	SS 020 7575	WICKMANN	T2.5D DIN 41571 TROP	
R1	RK VARISTOR 35-540V/1KA VARISTOR	808.4202	CONRADTY	CONOX 17M 130 VB	
R1	RK VARISTOR 35-540V/1KA VARISTOR	808.4202	CONRADTY	CONOX 17M 130 VB	808 4425
R2	RK VARISTOR 35-540V/1KA VARISTOR	808 4202	CONRADTY	CONOX 17M 130 VB	
R2	RK VARISTOR 35-540V/1KA VARISTOR	808 4202	CONRADTY	CONOX 17M 130 VB	808 4425
S1	SK WIPPSCH.2POL.AUS SW SWITCH	SK 553.2925	MARQUARDT	1802 1102	
T1	ZE TRANSFORMATOR TRANSFORMER	808 4131			
X1	FN NETZFILT.M.SPANNUNGSW FILTER	FN 099 3313	HEGNER&GLA	HGN369-2	
X213	FP STECKGEHAEUSE 6POL. CONNECTORHOUSING 6POL	805.7800	AMP	350 715-1	808.4131
X223	FP KUPPLUNGSGEHAEUSE 4POL CONNECTOR 4POL	808.4660	AMP	350779-1	808.4131
					- ENDE -

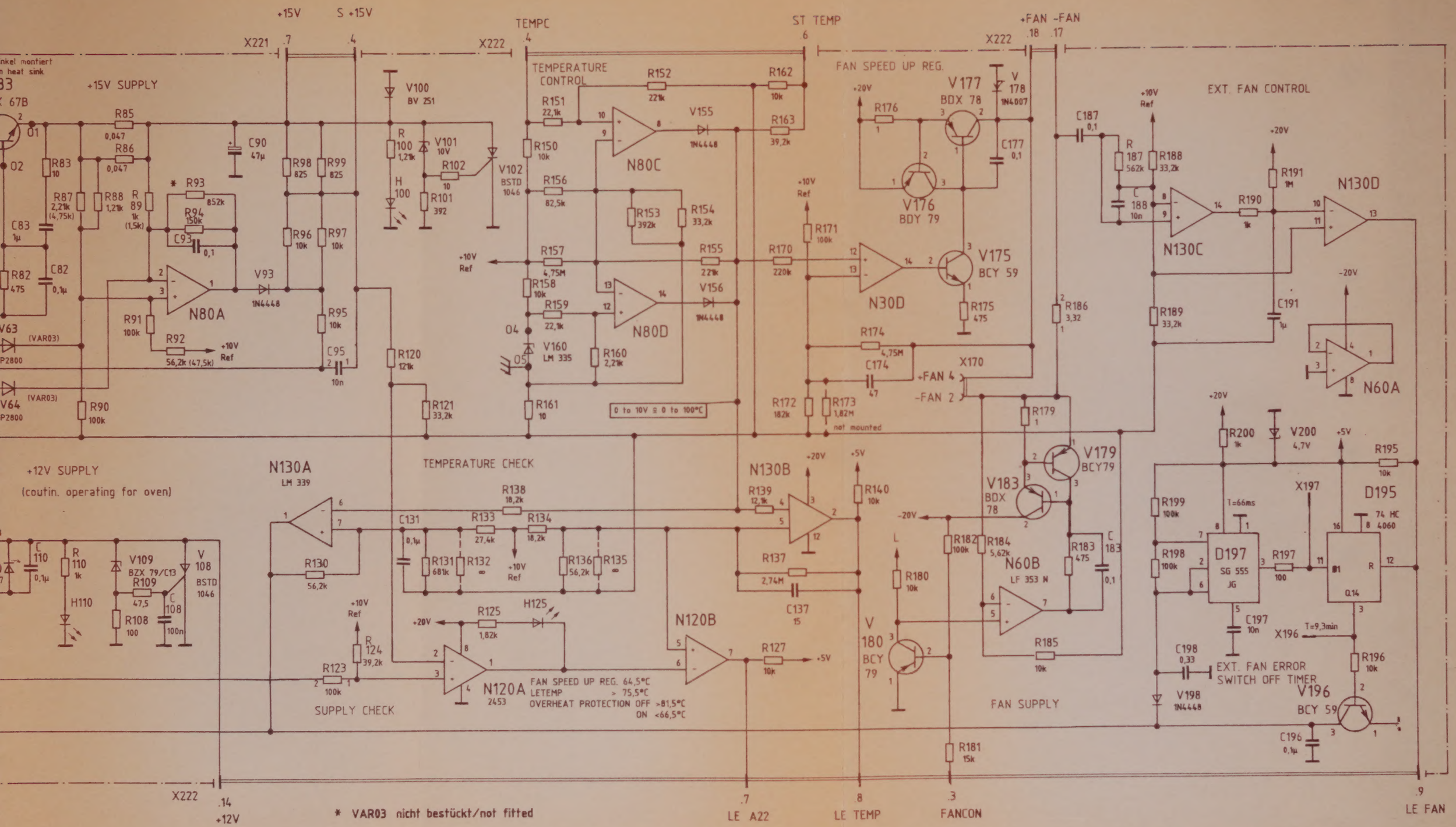

ROHDE&SCHWARZ	G	32 766 (15)	11.87	PF	K	37 066	07.89	PA	1KGF	Tag	Name
	H	32766	12.87	PA	L	37 066	09.89	PA	Bearb.	27.2.85	PF
	I	37063	06.88	PA					Gepr.		
	Änd. Zust.	Änderungs-Mitteilung	Datum	Name	Änd. Zust.	Änderungs-Mitteilung	Datum	Name	Norm		

Benennung: POWER SUPPLY RF-A22

zu Gerät: FSA

Zeichn.-Nr.: 808. 4519 S

reg. i. V. 806. 4011 V — erste Z. 808. 4019

Blatt-Nr. 1 v. 1 B.

8 9 10 11 12 13 14

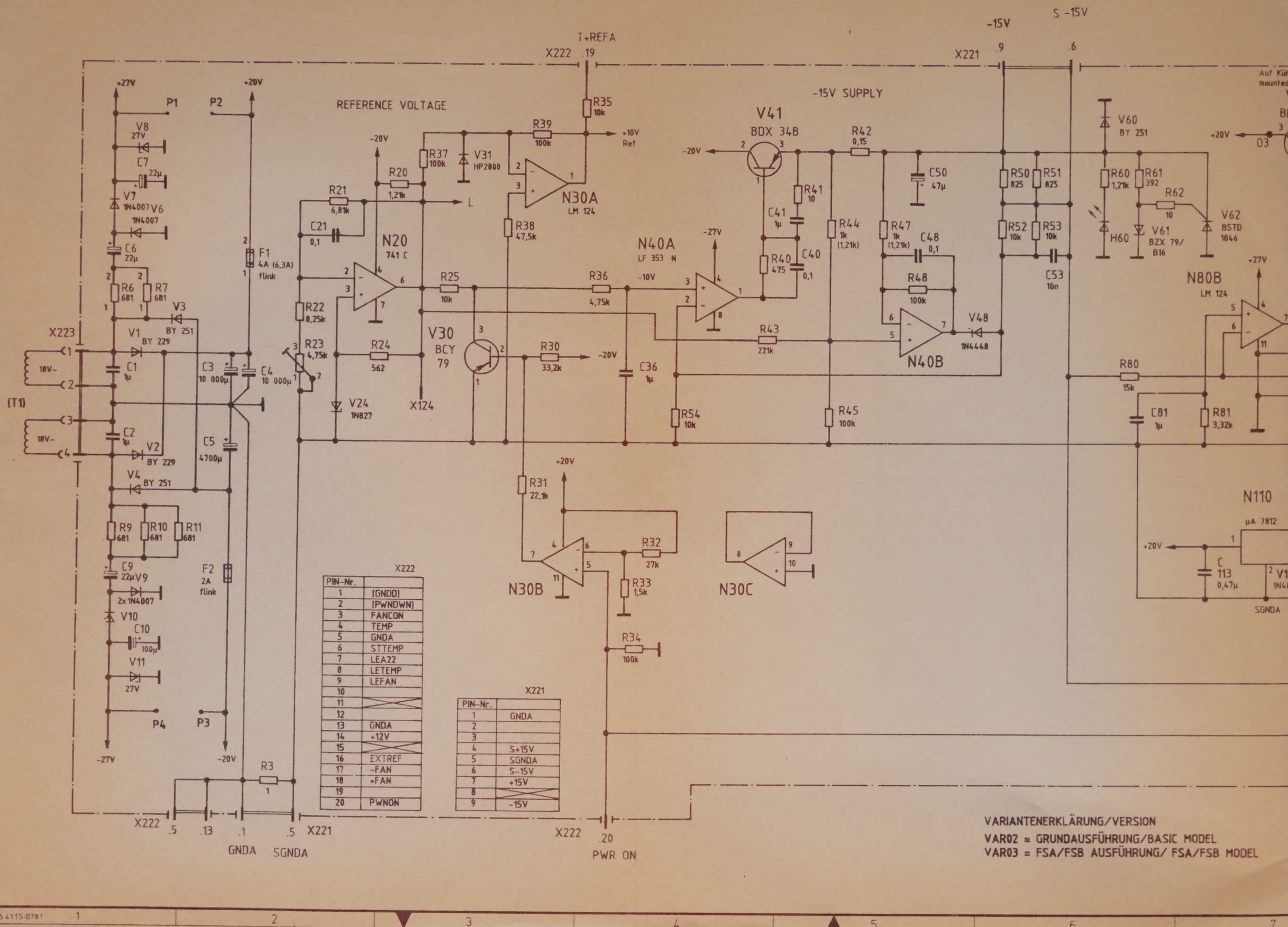

X222

PIN-Nr.	
1	(GNDD)
2	(PWNDWN)
3	FANCON
4	TEMP
5	GNDA
6	STTEMP
7	LEA22
8	LETEMP
9	LEFAN
10	
11	
12	
13	GNDA
14	+12V
15	
16	EXTREF
17	-FAN
18	+FAN
19	
20	PWNON

X221

PIN-Nr.	
1	GNDA
2	
3	
4	S+15V
5	SGNDA
6	S-15V
7	+15V
8	
9	-15V

VARIANTENERKLÄRUNG/VERSION
VAR02 = GRUNDAUSFÜHRUNG/BASIC MODEL
VAR03 = FSA/FSB AUSFÜHRUNG/ FSA/FSB MODEL

Fü...se Unterlage behalten
...ns alle Rechte vor

Zeichn.-Nr 808. 45 19 S
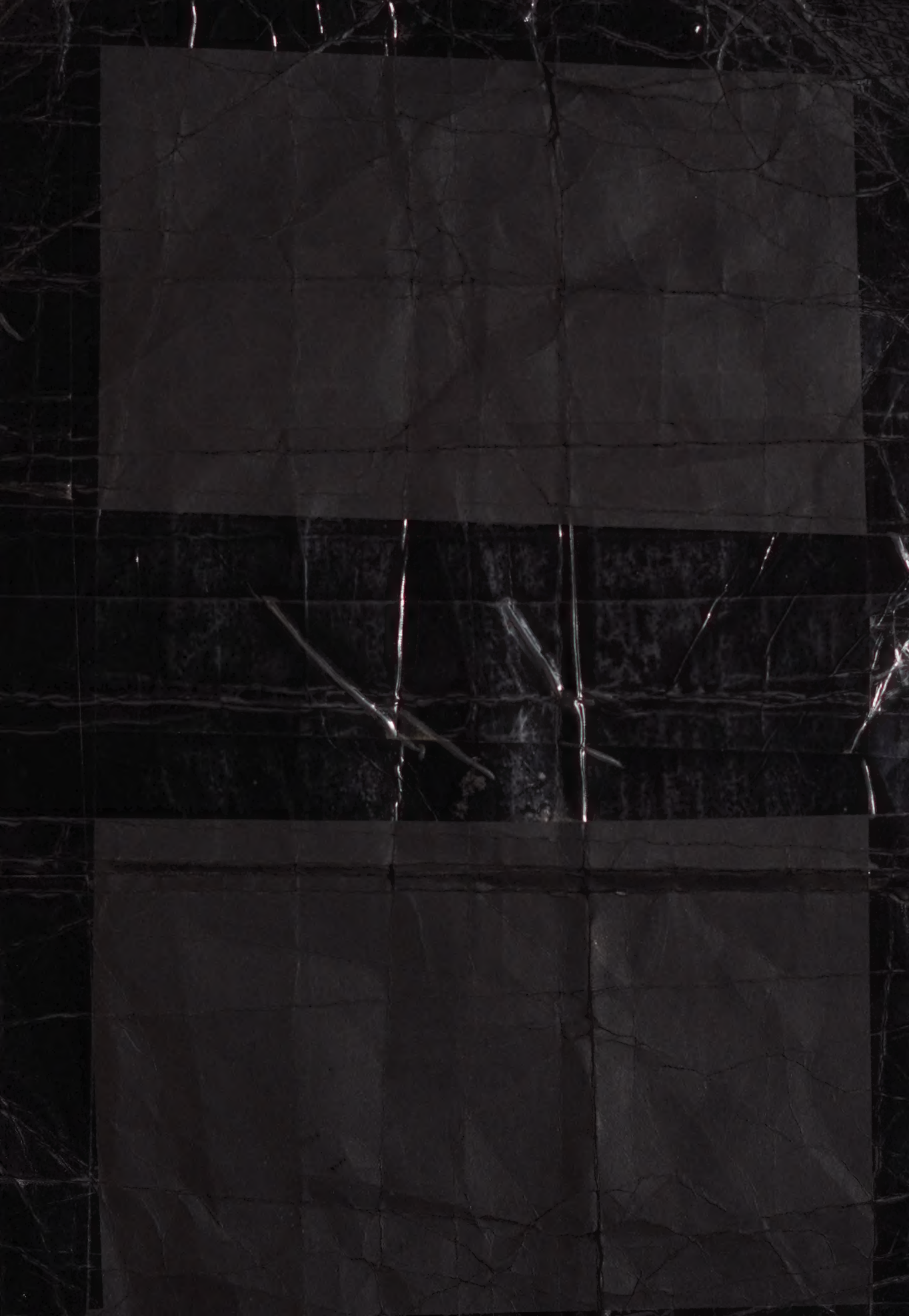
PF 095 4115-0781